Manual No. '10•HM-T-149

MHI

TECHNICAL MANUAL

AIR TO WATER HEAT PUMP

INDOOR UNIT
- HMA100V HMA100VM
- HMS140V

OUTDOOR UNIT
- FDCW71VNX
- FDCW100VNX
- FDCW140VNX

TANK UNIT
- HT30
- MT300
- MT500

MITSUBISHI HEAVY INDUSTRIES, LTD.

Table of Contents

Safety precautions — 3

Technical data

Technical specifications — 7
specifications — 7
Installation requirement — 9
Operating temperature range — 10
Capacity diagram — 11

Dimensions — 14
Indoor unit — 14
Outdoor unit — 19

Electrical circuit diagram — 22
Indoor unit — 22
Outdoor unit — 38

For Home Owners

Information about the installation — 41
Product information — 41
Features of Hydrolution — 41
Principle of operation Hydrolution — 41

Front panel, indoor unit — 42
How to use the front panel — 43
Menu types — 43
Quick movement — 43
Key lock — 43
Language setting — 43

Comfort setting heating — 44
General — 44
Operating status — 44
Changing the room temperature manually — 44
Default Heating curve setting — 45
Readjusting the default settings — 46
Heating system 2 — 46
Vacation set back — 46
Comfort setting with room sensor — 46

Comfort setting cooling
General — 47
Cooling operated from the outdoor sensor in operating mode AutoC — 47

Comfort setting hot water — 48
Available volume — 48
Prioritizing — 48
Extra Hot Water — 48

Maintenance — 49
Checking the safety valves in indoor unit — 49
Pressure gauge in indoor unit — 50
Emptying the hot water heater — 50
Emptying the vessel — 50
Maintenance of outdoor unit — 50
Saving tips — 50

Dealing with comfort disruption — 51
Operating mode “Add. heat only” — 52
Emergency mode — 52

Alarm indications — 53
What happens in the event of an alarm? — 53
Recommended actions — 53
Resetting alarms — 53

Installation

Outdoor unit installation — 55
Haulage and installation — 55
Refrigerant piping work — 56
Drain piping work — 57
Electrical wiring work — 57
Commissioning — 58

Indoor unit installation — 59
General information — 59
Pipe installation — 61
Electrical installation — 68

Start-up and inspection — 76
Preparations — 76
Commissioning — 77
Setting system flow heating — 77
Setting system flow cooling — 77
Commissioning Hydrolution without outdoor unit connected — 77
Checking external heat source controlled by the signal from indoor unit — 78
Checking external heat source controlled independently — 78
Inspection of the installation — 78
Cleaning the particle filter — 78
Secondary adjustment — 78
Basic menu settings to be checked — 79
Checklist: Checks before commissioning — 82

Control

Control — 84
Display — 84
Menu types — 84
Menu management — 84
Menu tree — 85
Main menus — 92
1.0 [N] Hot water temp. — 93
2.0 [N] Supply temp. — 94
3.0 [N] Supply temp. 2 — 96
4.0 [N] Outdoor temp. — 97
5.0 [N] Heat pump — 97
6.0 [N] Room temperature — 98
7.0 [N] Clock — 99
8.0 [N] Other adjustments — 100
9.0 [S] Service menus — 101

System description

Principle of operation Hydrolution — 108
Function — 108

General — 111
Explanation — 111

Radiators - only heating — **112**
HMA100V-FDCW100VNX(71VNX) — 112
HMS140V(MT300)-FDCW140VNX — 113

Underfloor heating and cooling — **114**

Fan convectors - heating and cooling — **115**

Dual system - heating and cooling — **116**

Underfloor heating and fan convectors- heating and cooling — **117**

External heat source — **118**
Sun — 118
Gas — 119
Oil — 120
Wood — 121

Service

Operation control function by the indoor unit controller — **123**

Operation control function by the outdoor unit controller — **136**

Alarm list — **146**
Alarm with automatic reset — 146
Temperature limiter alarm — 146
Indoor unit alarm — 146
Outdoor unit alarm — 147
Hot water alarm — 150
Supply alarm — 150

Troubleshooting guide — **151**
3 - Thermal cutout — 151
4 - OU power failure — 152
5 - Low condenser out — 153
6 - High condenser out — 154
7 - Anti freeze HX — 155
8 - High HW temp. 9 High AH temp. — 156
10 - High Supply temp. 1, 11 High Supply temp. 2 — 157
14,16 - Aborted defrost — 158
31 - S. fault HP — 159
30 - S. fault Outdoor, 32 - S. fault Cond out, 33 - S. fault Liquid line, 34 - S. fault HW, 35 - S. fault AH, 36 - S. fault supply 1, 37 - S. fault supply 2 — 160
E35 - High HX temp — 161
E36 - Permanent Hotgas — 162
E37 - S. fault Tho-R — 163
E38 - S. fault Tho-A — 164
E39 - S. fault Tho-D — 165
E40 - HP alarm — 166
E42 - Current cut — 167
E45 - Inverter communication error — 168
E47 - Inverter A/F module over current — 169
E48 - Fan alarm — 170
E49 - LP alarm — 171
E51 - Inverter and fan motor error — 173
E53 - S. fault Tho-S — 174
E54 - S. fault LPT — 175
E57 - Low refrigerant — 176
E59 - Inverter error — 177

Function check, components — **178**
Indoor unit Relay test - forced control — 178

DIP switch setting — **180**
FDCW71VNX — 180
FDCW100VNX, 140VNX — 181

Component replacement — **182**
Indoor unit — 182
Outdoor unit — 183
FDCW71VNX — 184
FDCW100VNX — 190
FDCW140VNX — 197

Components

Indoor unit — **205**
Circulation pump (GP10) — 205
Shuttle valves (QM30, QM31, QN11) — 207
Particle filter (HQ1) — 209
Safety valve (FL2) — 209
Summary — 209

Outdoor unit — **210**
Compressor — 210
4-way valve — 210
Expansion valve — 210
Low pressure sensor — 210

Temperature sensor — **211**
Sensor placement — 211
Data for sensor in outdoor unit — 211
Data for sensor in indoor unit — 211

Component positions — **212**
Indoor unit — 212
Outdoor unit — 218

Accessories — **219**
Accessories — 219
Wind protection — 220

When install the unit, be sure to check whether the selection of installation place, power supply specifications, usage limitation (piping length, height differences between indoor and outdoor units, power supply voltage and etc.) and installation spaces

SAFETY PRECAUTIONS

- We recommend you to read this "SAFETY PRECAUTIONS" carefully before the installation work in order to gain full advantage of the functions of the unit and to avoid malfunction due to mishandling.
- The precautions described below are divided into ⚠WARNING and ⚠CAUTION . The matters with possibilities leading to serious consequences such as death or serious personal injury due to erroneous handling are listed in the ⚠WARNING and the matters with possibilities leading to personal injury or damage of the unit due to erroneous handling including probability leading to serious consequences in some cases are listed in ⚠CAUTION . These are very important precautions for safety. Be sure to observe all of them without fail.
- Be sure to confirm no anomaly on the equipment by commissioning after completed installation and explain the operating methods as well as the maintenance methods of this equipment to the user according to the owner's manual.
- Keep the installation manual together with owner's manual at a place where any user can read at any time. Moreover if necessary, ask to hand them to a new user

⚠WARNING

- **Installation must be carried out by the qualified installer.**
  If you install the system by yourself, it may cause serious trouble such as water leaks, electric shocks, fire and personal injury , as a result of a system malfunction.
- **Install the system in full accordance with the instruction manual.**
  Incorrect installation may cause bursts, personal injury, water leaks, electric shocks and fire.
- **Use the original accessories and the specified components for installation.**
  If parts other than those prescribed by us are used, It may cause water leaks, electric shocks, fire and personal injury.
- **When installing in small rooms, take prevention measures not to exceed the density limit of refrigerant inthe event of leakage.**
  Consult the expert about prevention measures. If the density of refrigerant exceeds the limit in the event of leakage, lack of oxygen can occur, which can cause serious accidents.
- **Ventilate the working area well in the event of refrigerant leakage during installation.**
  If the refrigerant comes into contact with naked flames, poisonous gas is produced.
- **After completed installation, check that no refrigerant leaks from the system.**
  If refrigerant leaks into the room and comes into contact with an oven or other hot surface, poisonous gas is produced.
- **Hang up the unit at the specified points with ropes which can support the weight in lifting for portage. And to avoid jolting out of alignment, be sure to hang up the unit at 4-point support.**
  An improper manner of portage such as 3-point support can cause death or serious personal injury due to falling of the unit
- **Install the unit in a location with good support.**
  Unsuitable installation locations can cause the unit to fall and cause material damage and personal injury.
- **Ensure the unit is stable when installed, so that it can withstand earthquakes and strong winds.**
  Unsuitable installation locations can cause the unit to fall and cause material damage and personal injury.
- **Ensure that no air enters in the refrigerant circuit when the unit is installed and removed.**
  If air enters in the refrigerant circuit, the pressure in the refrigerant circuit becomes too high, which can cause burst and personal injury.
- **The electrical installation must be carried out by the qualified electrician in accordance with "the norm for electrical work" and "national wiring regulation", and the system must be connected to the dedicated circuit.**
  Power supply with insufficient capacity and incorrect function done by improper work can cause electric shocks and fire.
- **Be sure to shut off the power before starting electrical work.**
  Failure to shut off the power can cause electric shocks, unit failure or incorrect function of equipment.
- **Be sure to use the cables conformed to safety standard and cable ampacity for power distribution work.**
  Unconformable cables can cause electric leak, anomalous heat production or fire.
- **Use the prescribed cables for electrical connection, tighten the cables securely in terminal block and relieve the cables correctly to prevent overloading the terminal blocks.**
  Loose connections or cable mountings can cause anomalous heat production or fire.
- **Arrange the wiring in the control box so that it cannot be pushed up further into the box. Install the service panel correctly.**
  Incorrect installation may result in overheating and fire.
- **Do not perform brazing work in the airtight room.**
  It can cause lack of oxygen.
- **Use the prescribed pipes, flare nuts and tools for R410A.**
  Using existing parts (for R22 or R407C) can cause the unit failure and serious accidents due to burst of the refrigerant circuit.
- **Tighten the flare nut by using double spanners and torque wrench according to prescribed method. Be sure not to tighten the flare nut too much.**
  Loose flare connection or damage on the flare part by tightening with excess torque can cause burst or refrigerant leaks which may result in lack of oxygen.

- **Do not open the service valves for liquid line and gas line until completed refrigerant piping work, air tightness test and evacuation.**
  If the compressor is operated in state of opening service valves before completed connection of refrigerant piping work, air can be sucked into refrigerant circuit, which can cause bust or personal injury due to anomalously high pressure in the refrigerant.
- **Do not put the drainage pipe directly into drainage channels where poisonous gases such as sulphide gas can occur.**
  Poisonous gases will flow into the room through drainage pipe and seriously affect the user's health and safety
- **Only use prescribed optional parts. The installation must be carried out by the qualified installer.**
  If you install the system by yourself, it can cause serious trouble such as water leaks, electric shocks, fire.
- **Do not run the unit with removed panels or protections.**
  Touching rotating equipments, hot surfaces or high voltage parts can cause personal injury due to entrapment, burn or electric shocks.
- **Be sure to fix up the service panels.**
  Incorrect fixing can cause electric shocks or fire due to intrusion of dust or water.
- **Do not perform any repairs or modifications by yourself. Consult the dealer if the unit requires repair.**
  If you repair or modify the unit, it can cause water leaks, electric shocks or fire.
- **Do not perform any change of protective device itself or its setup condition.**
  The forced operation by short-circuiting protective device of pressure switch and temperature controller or the use of non specified component can cause fire or burst.
- **Be sure to switch off the power supply in the event of installation, inspection or servicing.**
  If the power supply is not shut off, there is a risk of electric shocks, unit failure or personal injury due to the unexpected start of fan.
- **Consult the dealer or an expert regarding removal of the unit.**
  Incorrect installation can cause water leaks, electric shocks or fire.
- **Stop the compressor before disconnecting refrigerant pipes in case of pump down operation.**
  If disconnecting refrigerant pipes in state of opening service valves before compressor stopping, air can be sucked, which can cause burst or personal injury due to anomalously high pressure in the refrigerant circuit.

⚠CAUTION

- **Carry out the electrical work for ground lead with care.**
  Do not connect the ground lead to the gas line, water line, lightning conductor or telephone line's ground lead. Incorrect grounding can cause unit faults such as electric shocks due to short-circuiting.
- **Use the circuit breaker with sufficient breaking capacity.**
  If the breaker does not have sufficient breaking capacity, it can cause the unit malfunction and fire.
- **Earth leakage breaker must be installed.**
  If the earth leakage breaker is not installed, it can cause electric shocks.
- **Do not use any materials other than a fuse with the correct rating in the location where fuses are to be used.**
  Connecting the circuit with copper wire or other metal thread can cause unit failure and fire.
- **Do not install the unit near the location where leakage of combustible gases can occur.**
  If leaked gases accumulate around the unit, it can cause fire.
- **Do not install the unit where corrosive gas (such as sulfurous acid gas etc.) or combustible gas (such as thinner and petroleum gases) can accumulate or collect, or where volatile combustible substances are handled.**
  Corrosive gas can cause corrosion of heat exchanger, breakage of plastic parts and etc. And combustible gas can cause fire.
- **Secure a space for installation, inspection and maintenance specified in the manual.**
  Insufficient space can result in accident such as personal injury due to falling from the installation place.
- **When the outdoor unit is installed on a roof or a high place, provide permanent ladders and handrails along the access route and fences and handrails around the outdoor unit.**
  If safety facilities are not provided, it can cause personal injury due to falling from the installation place.
- **Do not use the indoor unit at the place where water splashes may occur such as in laundries.**
  Since the indoor unit is not waterproof, it can cause electric shocks and fire.
- **Do not install nor use the system close to the equipment that generates electromagnetic fields or high frequency harmonics.**
  Equipment such as inverters, standby generators, medical high frequency equipments and telecommunication equipments can affect the system, and cause malfunctions and breakdowns. The system can also affect medical equipment and telecommunication equipment, and obstruct its function or cause jamming.
- **Do not install the outdoor unit in a location where insects and small animals can inhabit.**
  Insects and small animals can enter the electric parts and cause damage or fire. Instruct the user to keep the surroundings
- **Do not use the base flame for outdoor unit which is corroded or damaged due to long periods of operation.**
  Using an old and damage base flame can cause the unit falling down and cause personal injury.
- **Do not install the unit in the locations listed below.**
  - Locations where carbon fiber, metal powder or any powder is floating.
  - Locations where any substances that can affect the unit such as sulphide gas, chloride gas, acid and alkaline can occur.
  - Vehicles and ships.
  - Locations where cosmetic or special sprays are often used.
  - Locations with direct exposure of oil mist and steam such as kitchen and machine plant.
  - Locations where any machines which generate high frequency harmonics are used.
  - Locations with salty atmospheres such as coastlines.

・Locations with heavy snow. (If installed, be sure to provide base flame and snow hood mentioned in the manual)
・Locations where the unit is exposed to chimney smoke.
・Locations at high altitude. (more than 1000m high)
・Locations with ammonic atmospheres.
・Locations where heat radiation from other heat source can affect the unit.
・Locations without good air circulation.
・Locations with any obstacles which can prevent inlet and outlet air of the unit.
・Locations where short circuit of air can occur. (in case of multiple units installation)
・Locations where strong air blows against the air outlet of outdoor unit.
It can cause remarkable decrease in performance, corrosion and damage of components, malfunction and fire.

- **Do not install the outdoor unit in the locations listed below.**
  ・Locations where discharged hot air or operating sound of the outdoor unit can bother neighborhood.
  ・Locations where outlet air of the outdoor unit blows directly to plants.
  ・Locations where vibration can be amplified and transmitted due to insufficient strength of structure.
  ・Locations where vibration and operation sound generated by the outdoor unit can affect seriously. (on the wall or at the place near bed room)
  ・Locations where an equipment affected by high harmonics is placed. (TV set or radio receiver is placed within 5m)
  ・Locations where drainage cannot run off safely.
  It can affect surrounding environment and cause a claim.
- **Do not install the remote controller at the direct sunlight.**
  It can cause malfunction or deformation of the remote controller.
- **Do not use the unit for special purposes such as storing foods, cooling precision instruments and preservation of animals, plants or art.**
  It can cause the damage of the items.
- **Take care when carrying the unit by hand.**
  If the unit weights more than 20kg, it must be carried by two or more persons. Do not carry by the plastic straps, always use the carry handle when carrying the unit by hand. Use gloves to minimize the risk of cuts by the aluminum fins.
- **Dispose of any packing materials correctly.**
  Any remaining packing materials can cause personal injury as it contains nails and wood. And to avoid danger of suffocation, be sure to keep the plastic wrapper away from children and to dispose after tear it up.
- **Pay attention not to damage the drain pan by weld spatter when welding work is done near the indoor unit.**
  If weld spatter entered into the indoor unit during welding work, it can cause pin-hole in drain pan and result in water leakage. To prevent such damage, keep the indoor unit in its packing or cover it.
- **Be sure to insulate the refrigerant pipes so as not to condense the ambient air moisture on them.**
  Insufficient insulation can cause condensation, which can lead to moisture damage on the ceiling, floor, furniture and any other valuables.
- **Be sure to perform air tightness test by pressurizing with nitrogen gas after completed refrigerant piping work.**
  If the density of refrigerant exceeds the limit in the event of refrigerant leakage in the small room, lack of oxygen can occur, which can cause serious accidents.
- **Do not touch any buttons with wet hands.**
  It can cause electric shocks.
- **Do not shut off the power supply immediately after stopping the operation.**
  Wait at least 5 minutes, otherwise there is a risk of water leakage or breakdown.
- **Do not control the system with main power switch.**
  It can cause fire or water leakage. In addition, the fan can start unexpectedly, which can cause personal injury.
- **Do not touch any refrigerant pipes with your hands when the system is in operation.**
  During operation the refrigerant pipes become extremely hot or extremely cold depending the operating condition, and it can cause burn injury or frost injury.

Notabilia for units designed for R410A

- Only use R410A refrigerant. R410A is the refrigerant whose pressure is 1.6 times as high as that of conventional refrigerant.
- The size of charging port of service valve and check joint for R410A are altered from that for conventional refrigerant in order to prevent the system being charged with the incorrect refrigerant by mistake. And the protruding dimension of pipe for flare processing and flare nut size for R410A are also altered from that for conventional refrigerant in order to reinforce strength against the pressure for R410A. Accordingly the dedicated tools for R410A listed in the below mentioned table should be prepared for installation and servicing.
- Do not use charging cylinder. Using charging cylinder may alter the composition of refrigerant, which results in making the performance of the system worse.
- Refrigerant must be charged always in liquid state from the bottle.

Dedicated tools for R410A	
a)	Gauge manifold
b)	Charge hose
c)	Electronic scale for refrigerant charge
d)	Torque wrench
e)	Flare tool
f)	Protrusion control gauge for copper pipe
g)	Vacuum pump adapter
h)	Gas leak detector

Technical data

Technical specifications

Specifications

Indoor Model			HMA100V	HMA100VM	HMA100V	HMA100VM	HMS140V
Outdoor Model			FDCW71VNX		FDCW100VNX		FDCW140VNX
Power source			1 phase 230V 50Hz/ 3 phase 400V 50Hz	3 phase 230V 50Hz	1 phase 230V 50Hz/ 3 phase 400V 50Hz	3 phase 230V 50Hz	1 phase 230V 50Hz/ 3 phase 400V 50Hz
Heating Nominal capacity	condition 1	kW	8.0 (3.0 - 8.0)		9.0 (3.5 - 12.0)		16.5 (5.8 - 16.5)
	condition 2	kW	8.3 (2.0 - 8.3)		9.2 (3.5 - 10.5)		16.5 (4.2 - 17.2)
Heating power consumption	condition 1	kW	2.40		2.50		4.98
	condition 2	kW	2.03		2.07		3.93
COP	condition 1		3.33		3.60		3.31
	condition 2		4.08		4.44		4.20
Cooling Nominal capacity	condition 1	kW	7.1 (2.0 - 7.1)		8.0 (3.0 - 9.0)		—
	condition 2	kW	10.7 (2.7 - 10.7)		11.0 (3.3 - 12.0)		16.5 (5.2 - 16.5)
Cooling power consumption	condition 1	kW	2.65		2.85		—
	condition 2	kW	3.19		3.04		4.60
EER	condition 1		2.68		2.81		—
	condition 2		3.35		3.62		3.59
Tapping capacity	12liter/min	liter	270		270		—
	16liter/min	liter	200		200		—
Operation range (Outdoor temperature)		heating	-20 - 43				
		cooling	15 - 43				
Operation range (Water temperature)		heating	25 - 58 (65 with immersion heater)				
		cooling	7 - 25				18-25
System water flow		l/s	0.19 - 0.38		0.24 - 0.57		0.40 - 0.79
Max current		A	44/ 16	30	44/ 16	30	50/ 25
Recommended fuse rating		A	50/ 16	32	50/ 16	32	63/ 25
Starting current		A	5				
Deviation, incoming supply			-15 - +10%				
Max refrigerant pipe length		m	30		12		30
Max height difference between IU and OU		m	7				
Indoor Unit	Height	mm	1760 (+20 - 50mm, adjustable feet)				1004
	Width	mm	600				513
	Depth	mm	650				360
	Weight (without water in the system)	kg	140				60
	Color		White				
	IP Grade		IP21				
	Immersion heater		9kW 4steps (2, 4, 6, 9)				—
	Circ. Pump: Output	W	9-63 (variable speed)				9-110 (variable speed)
	Circ. Pump: Max available external pressure	kPa	57				61
	Circ. Pump: Max flow	l/s	0.54				0.78
	Circ. Pump: Flow at 20kPa pressure drop	l/s	0.45				0.67
	Emergency mode thermostat	℃	35/45				—
	Temperature limiter	℃	98(-8)				—
	Safety valve	MPa	0.25				—
	Volume total	liter	270 ±5%				—
	Volume hot water coil	liter	14				—
	Material hot water coil		Stainless steel				—
	Max pressure, tank	MPa	0.25				—
	Max pressure, hot water coil	MPa	1.0				—
	Water quality, domestic hot water		≦ EU directive no 98/83/EF				—
	Volume expansion vessel	liter	—				18
	Ambient temperature, indoor module	℃	5-35, RH95%				
	Dimensions, climate system pipe	mm	22				28
	Dimensions, hot water pipe	mm	22				—
	Water pipe connection		Compression fittings				
	External heat source connection		ISO 228/1 G1 internal				—

Specifications

Indoor Model			HMA100V	HMA100VM	HMA100V	HMA100VM	HMS140V
Outdoor Model			FDCW71VNX		FDCW100VNX		FDCW140VNX
Outdoor Unit	Height	mm	595		845		1300
	Width	mm	780 (+67 with valve cover)		970		970
	Depth	mm	340		370 (+80 with foot rail)		370 (+80 with foot rail)
	Weight	kg	60		81		105
	Color		Stucco White				
	Sound Power level*	dB(A)	64		64.5		71
	Sound Pressure level**	dB(A)	48		50		54
	Airflow	m3/min	50		73		100
	Type of compressor		RMT5118MDE2		RMT5126MDE2		RMT5134MDE2
	Refrigerant oil	liter	0.68 M-MA68		0.9 M-MA68		0.9 M-MA68
	Heat exchanger		M fin & inner grooved tubing		straight fin & inner grooved tubing		M fin & inner grooved tubing
	Ref control		EEV				
	Defrost control		Reversing cycle				
	Fan		Propeller fan x 1				Propeller fan x 2
	Fan motor	W	86 x 1		86 x 1		86 x 2
	Shock & vibration absorber		Rubber sleeve (for compressor)				
	Electric heater (crank case)	W	20				
	Safety equipment		Internal thermostat for fan motor Abnormal discharge temperature protection				
	Power and signal line from indoor unit		5 core 2.5mm2		5 core 2.5mm2		3 core 6mm^2+3 core 1.5mm^2
	Refrigerant		R410A				
	Refrigerant volume (pipe length without additional charge)	kg (m)	2.55 (15)		2.9 (12)		4.0 (15)
	Dimensions, refrigerant pipe	mm (inch)	Gas pipe: OD 15.88 (5/8"), Liquid pipe: OD 9.52 (3/8")				
	Ref pipe connections		Frare				
	Accessories		Base heater (50W)				

Tank Unit (for HMS140V only)

Model			HT30	MT300	MT500
Power source			1phase 230V / 3phase 400V 50Hz		
Volume		liter	30	300	500
Volume hot water coil		liter	—	14	21
Material hot water coil			—	Stainless steel	
Tapping capacity	12liter/min	liter	—	320	TBD
	16liter/min	liter	—	230	TBD
Immersion heater		kW	9kW 4steps		
Height		mm	358	1880	1695
Width		mm	593	597	759
Depth		mm	360	598	879
Weight		kg	23	110	131
IP grade			IP21		
Color			White		
Emergency mode thermostat		℃	35/45		
Temperature limiter		℃	98 (-8)		
Safety valve		MPa	0.25		
Max pressure, Tank		MPa	0.25		
Max pressure, hot water coil		MPa	—	1.0	
Water quality, domestic hot water			—	≦ EU directive no 98/83/EF	
Dimensions, climate system pipe		mm(inch)	25.4(1")		28
Dimensions, hot water pipe		mm(inch)	—	25.4(1")	
Max water pipe length to indoor unit		m	10		
Max wiring length to indoor unit		m	10		
Water pipe connection, climate system			ISO 228/1 G1 external		Compression fitting
Water pipe connection, hot water			—	ISO 228/1 G1 external	
External heat source connection			—	ISO 7/1 R1 int	ISO 228/1 G1 int

Test conditions

		Water Temperature	Ambient Temperature
Heating	condition 1	45℃ out / 40℃ in	7℃DB / 6℃WB
	condition 2	35℃ out / 30℃ in	
Cooling	condition 1	7℃ out / 12℃ in	35℃DB
	condition 2	18℃ out / 23℃ in	
Tapping		40℃ out / 15℃ in	7℃DB / 6℃WB

Test condition for sound pressure level**
Temperature condition: Heating condition 1
MIC position: 1m away in front of outdoor unit at the height of 1m

Installation requirements

	HMA100V, HMA100VM		HMS140V
	FDCW71VNX	FDCW100VNX	FDCW140VNX
Max pressure, climate system	0.25 MPa (2.5 Bar)		
Max temperature, climate system	65℃		
Max temperature in indoor unit	65℃		
Max temperature from external heat source	65℃		
Max supply temperature with compressor at outdoor temp. -15℃	58℃		
Min supply temp. cooling	7℃		18℃
Max supply temp. cooling	25℃		
Min volume, climate system without underfloor cooling application	35	50	75
Min volume, climate system with underfloor cooling application	70	100	150
Max flow, climate system	0.38ℓ/s	0.57ℓ/s	0.79ℓ/s
Min flow, climate system	0.19ℓ/s	0.24ℓ/s	0.40ℓ/s
Nominal system flow heating (△T=5K)	0.38ℓ/s (8kW,7/45℃)	0.43ℓ/s (9kW,7/45℃)	0.79ℓ/s (16.5kW,7/45℃)
Nominal system flow cooling (△T=5K)	0.34ℓ/s (7.1kW,35/7℃)	0.38ℓ/s (8kW,35/7℃)	0.79ℓ/s (16.5kW,35/18℃)

External circulation pump must be used when the pressure drop in the system is greater than the available external pressure. In such case, a bypass line with non-return valve must be installed.

Use an overflow valve if system flow cannot be guaranteed.

Operating temperature range

Heating (All models)

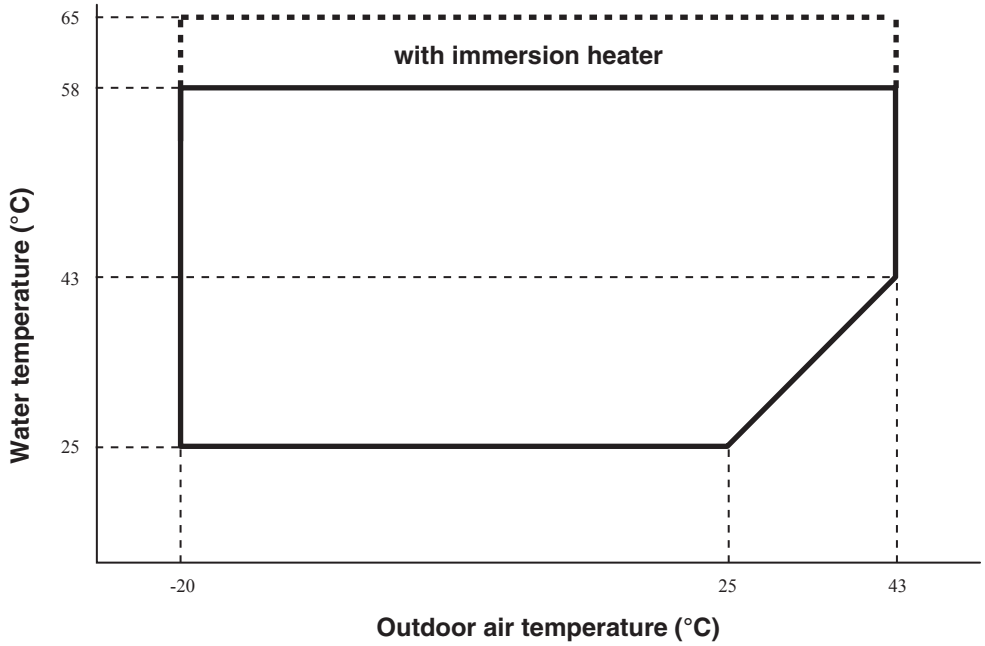

NOTE

1. *Avoid installing outdoor unit where wind blows stronger than 5m/s. In strong wind enviroment, operable temperature range is drastically narrowed if wind protection is not used.*
2. *In case outdoor unit is installed where outdoor air temperature drops below -10℃ and wind blows directly into the outdoor unit, install wind protection on outdoor unit.*

If it is not observed, it will lead to abnormal stop.

For details, see page 220.

Cooling

FDCW71VNX,100VNX

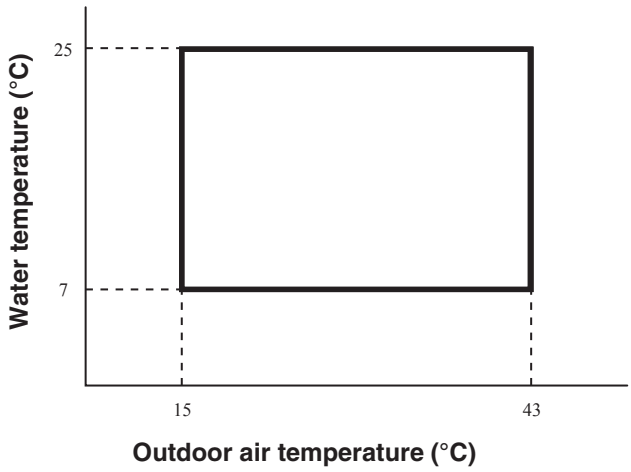

FDCW140VNX

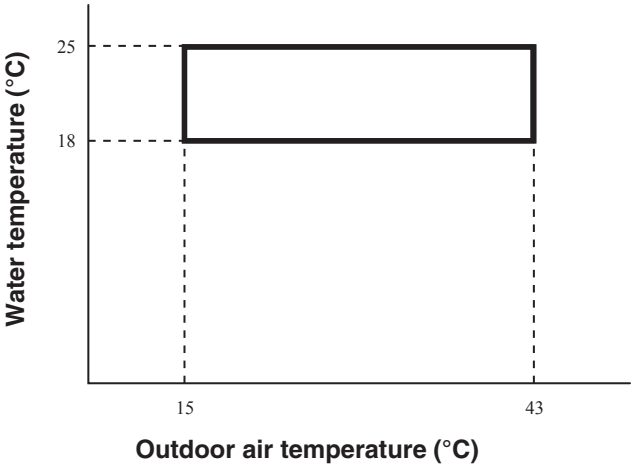

Capacity diagram

HMA100V–FDCW71VNX

HMA100VM–FDCW71VNX

Heating

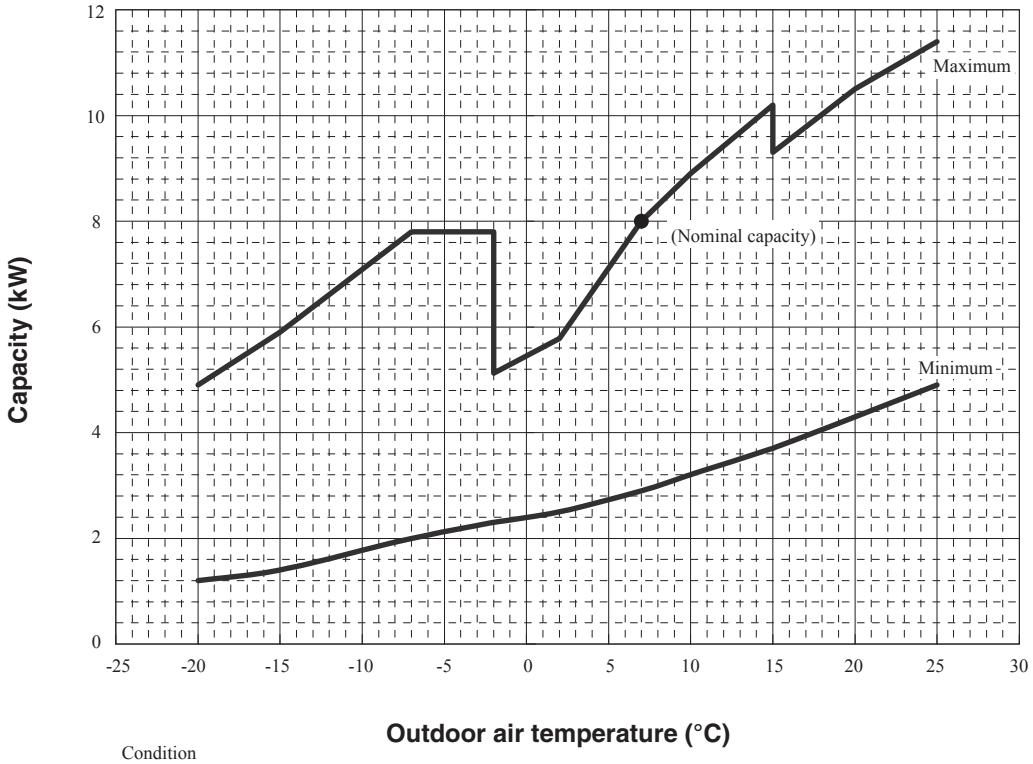

Condition
Supply water temperature : 45ºC
Water flow rate : 1376 ℓ/*h*

Cooling

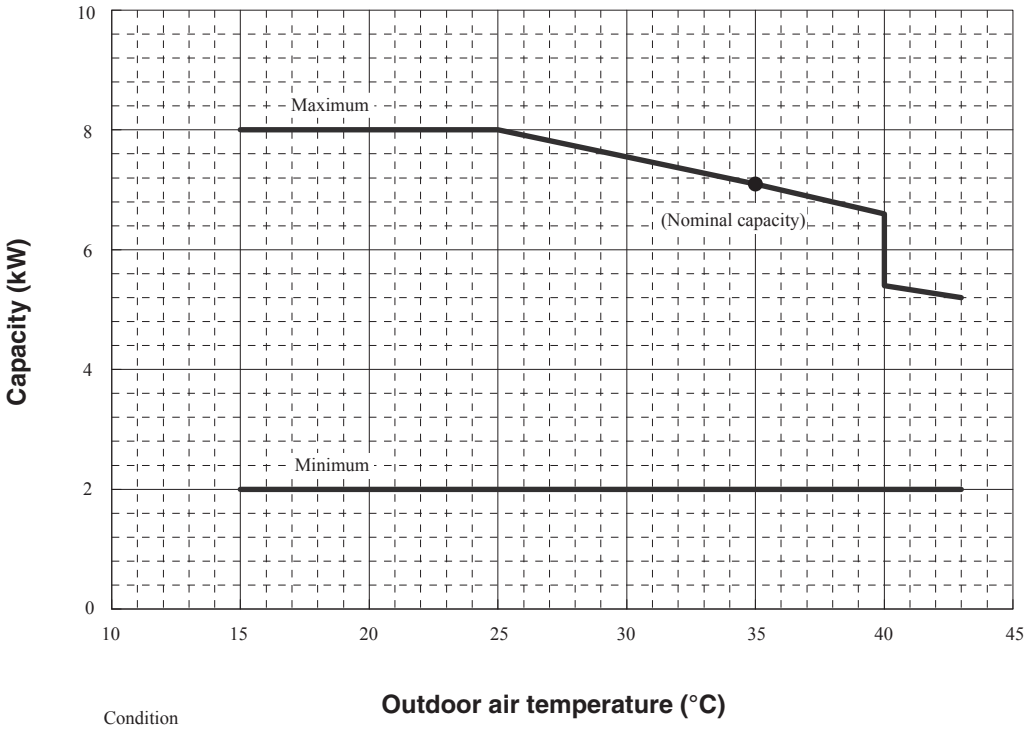

Condition
Supply water temperature : 7ºC
Water flow rate : 1221 ℓ/*h*

HMA100V–FDCW100VNX
HMA100VM–FDCW100VNX

Heating

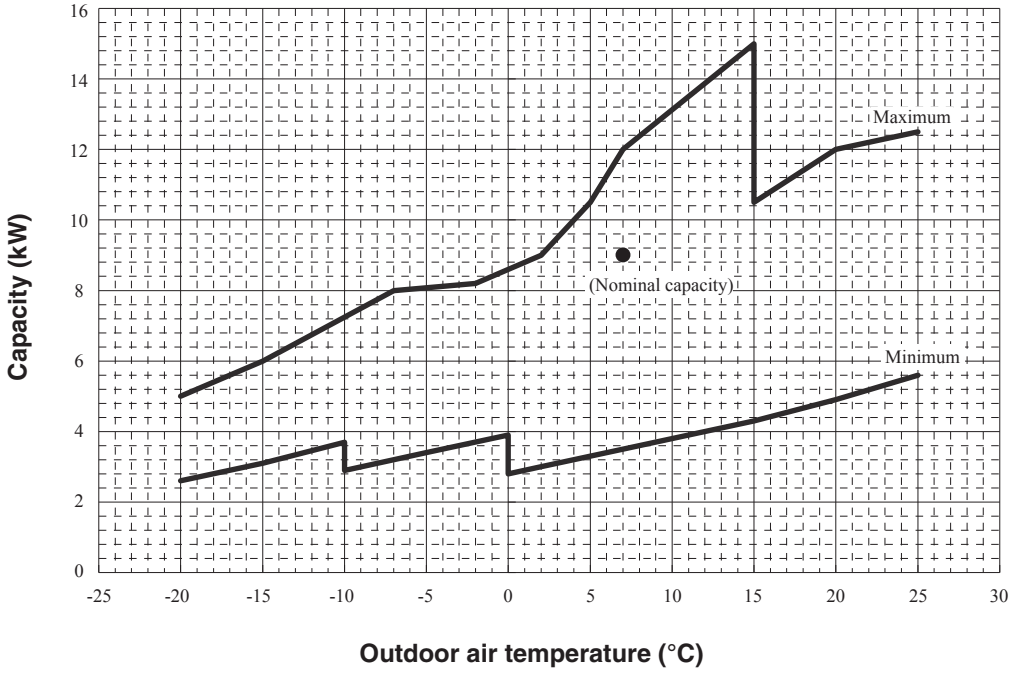

Condition
Supply water temperature : 45ºC
Water flow rate : 1548 ℓ/h

Cooling

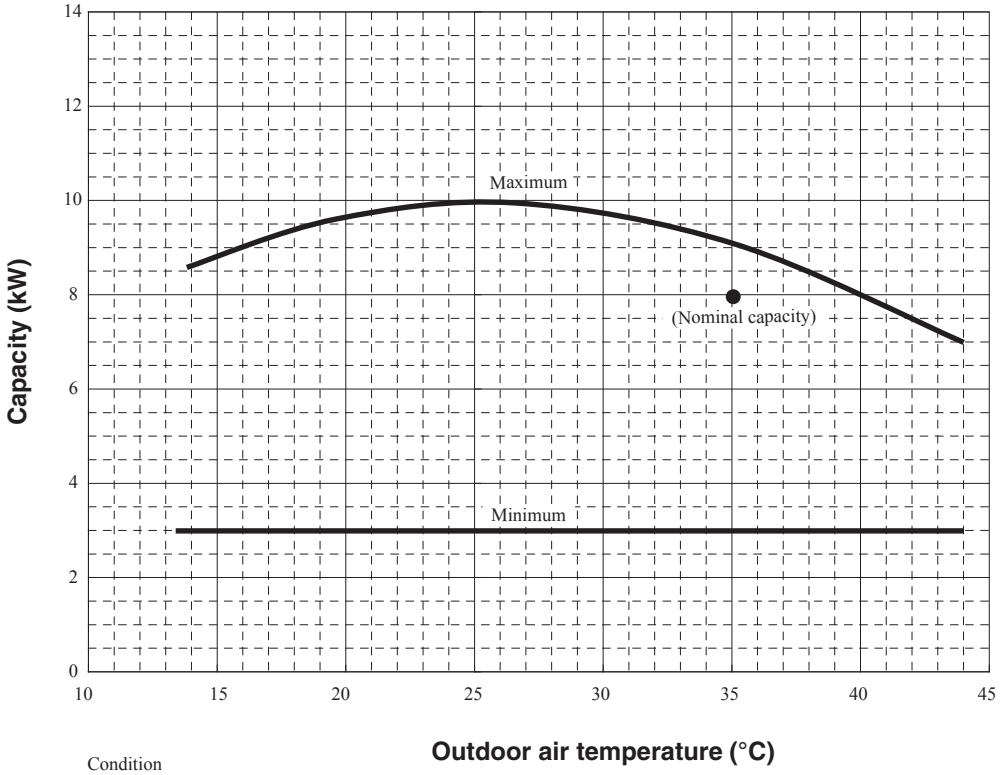

Condition
Supply water temperature : 7ºC
Water flow rate : 1376 ℓ/h

HMS140V–FDCW140VNX

Heating

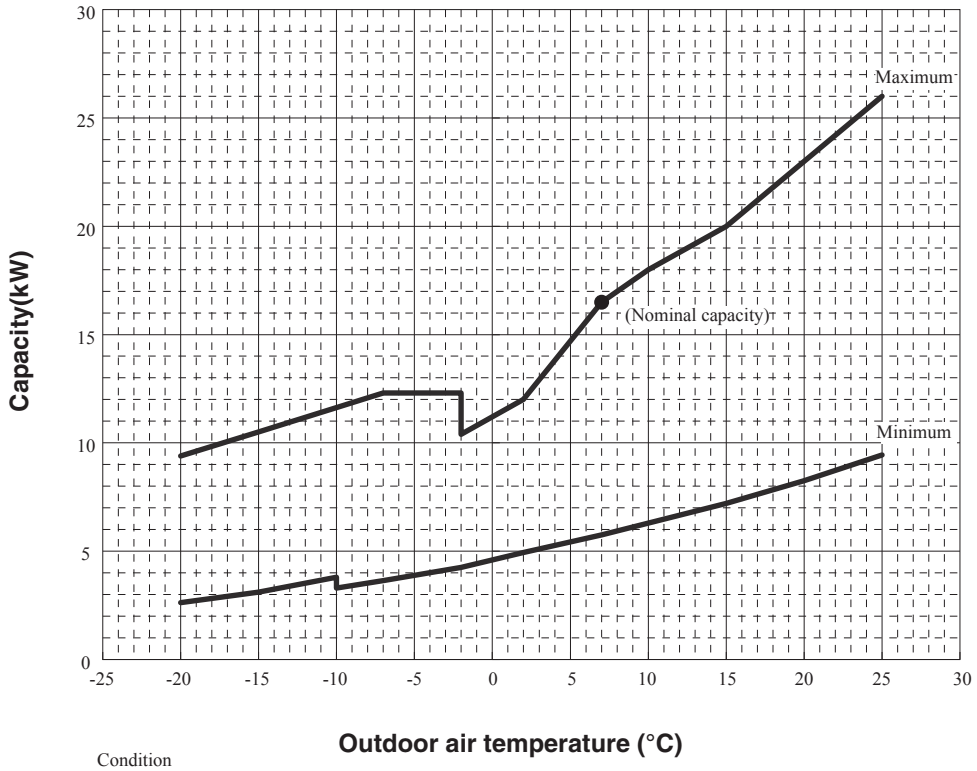

Condition
Supply water temperature : 45ºC
Water flow rate : 2838 ℓ/h

Cooling

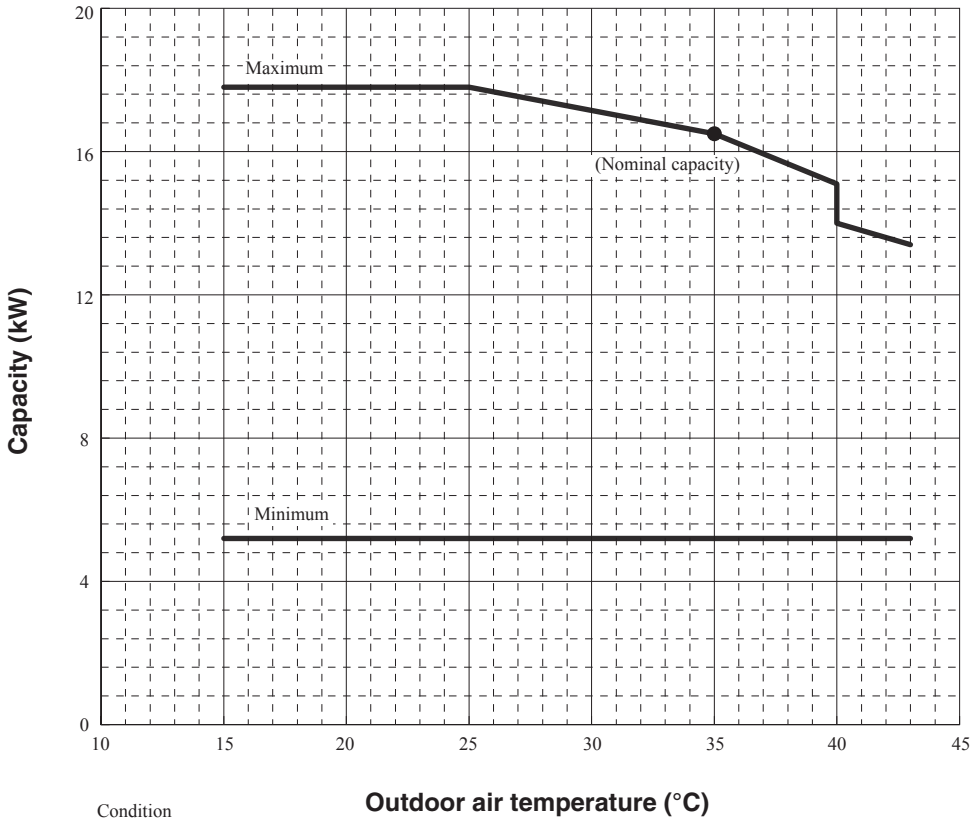

Condition
Supply water temperature : 18ºC
Water flow rate : 2838 ℓ/h

Dimensions

Indoor unit

HMA100V

HMA100VM

Symbol	contents	
XL1	Climate system supply	22 mm
XL2	Climate system return	22 mm
XL3	Cold water	22 mm
XL4	Hot water	22 mm
XL8	External heat source in	G1 int
XL9	External heat source out	G1 int
XL13	Liquid line refrigerant	3 / 8″
XL14	Gas line refrigerant	5 / 8″
XL15	Connection safety valve, manometer	

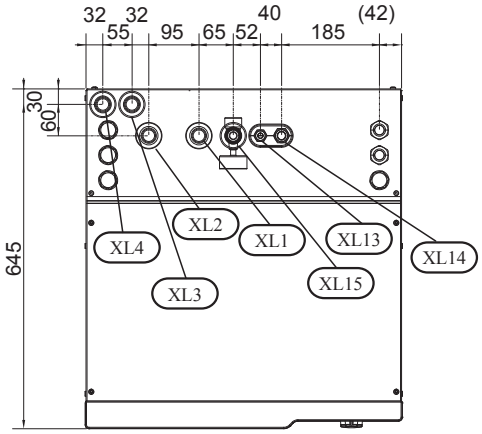

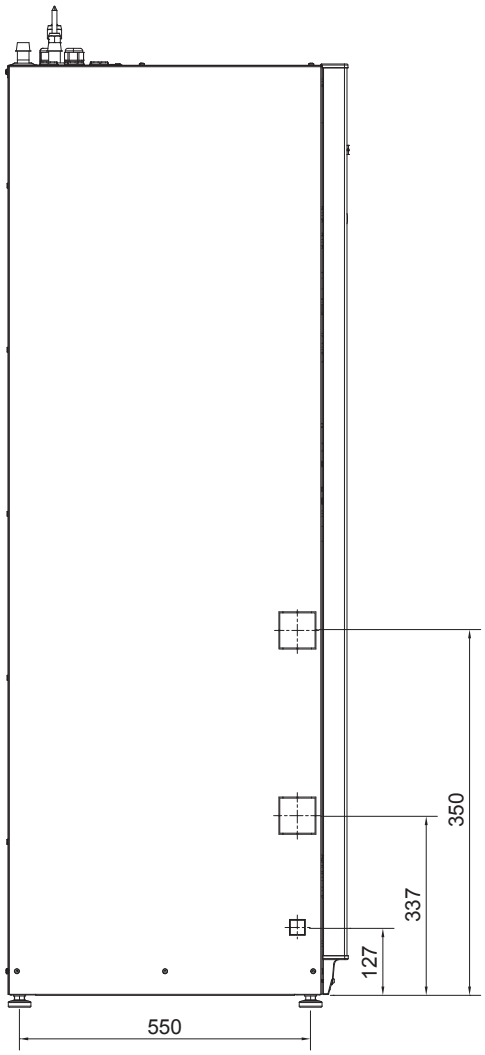

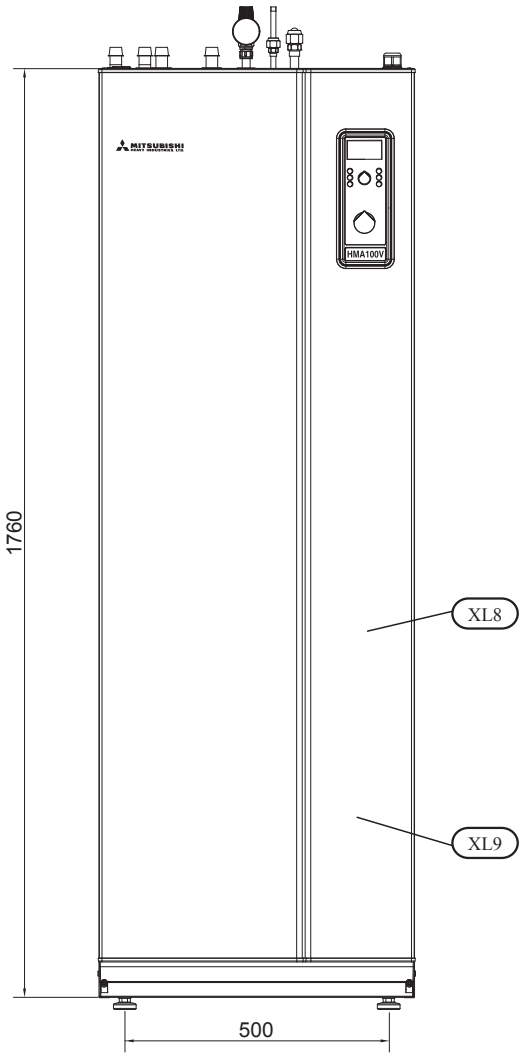

HMS140V

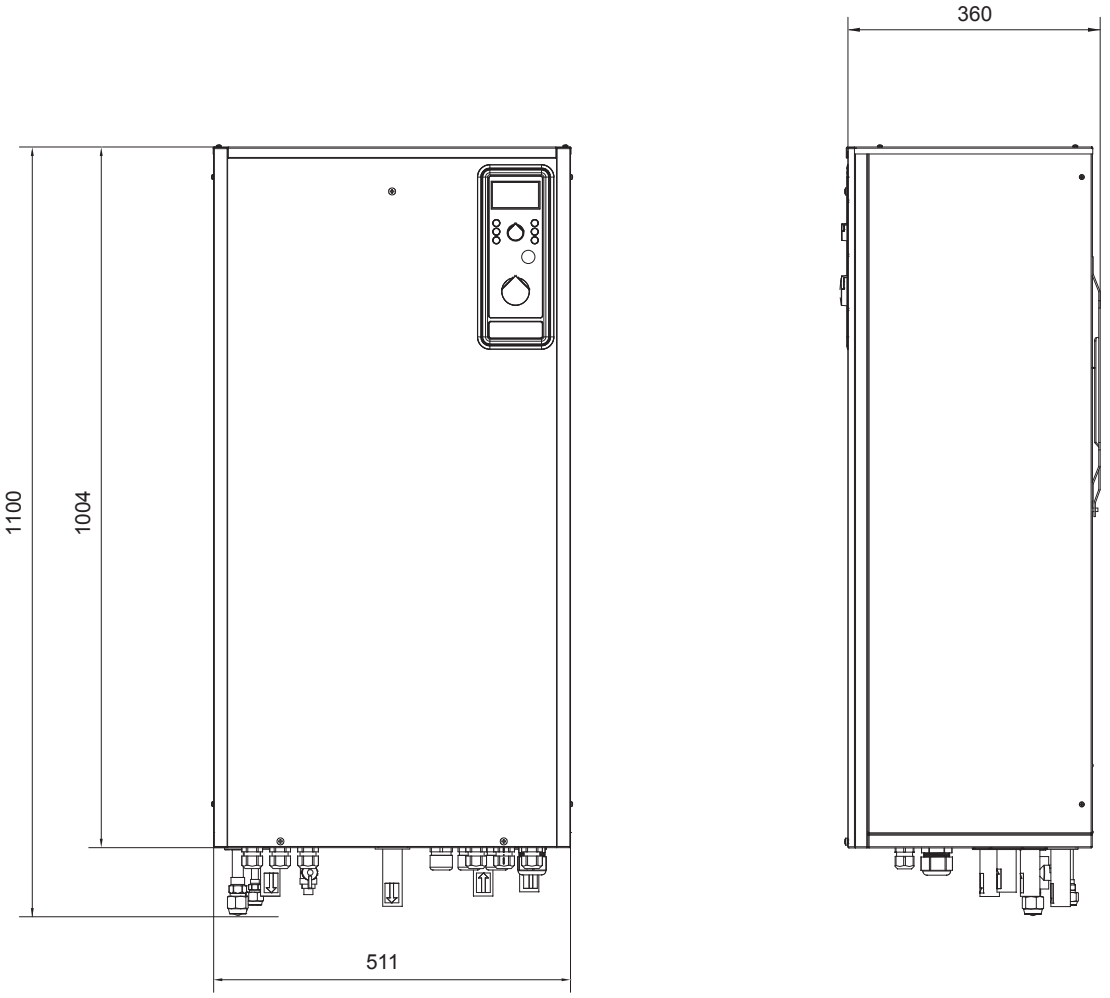

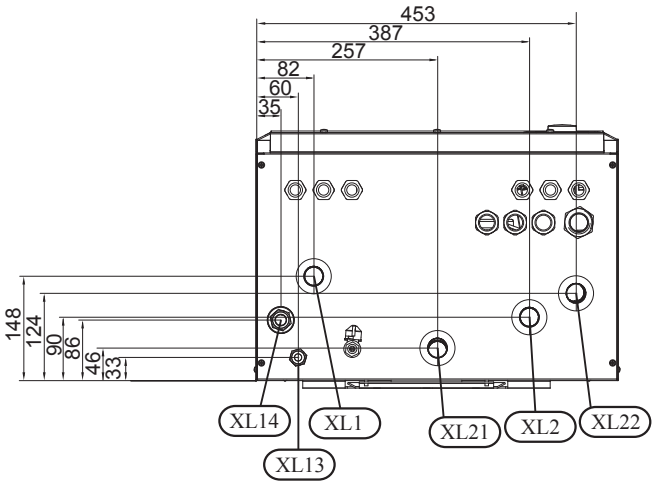

Symbol	contents	
XL1	Climate system supply	28 mm
XL2	Climate system return	28 mm
XL13	Liquid line refrigerant	3 / 8″
XL14	Gas line refrigerant	5 / 8″
XL21	Tank circuit supply	28 mm
XL22	Tank circuit return	28 mm

HT30

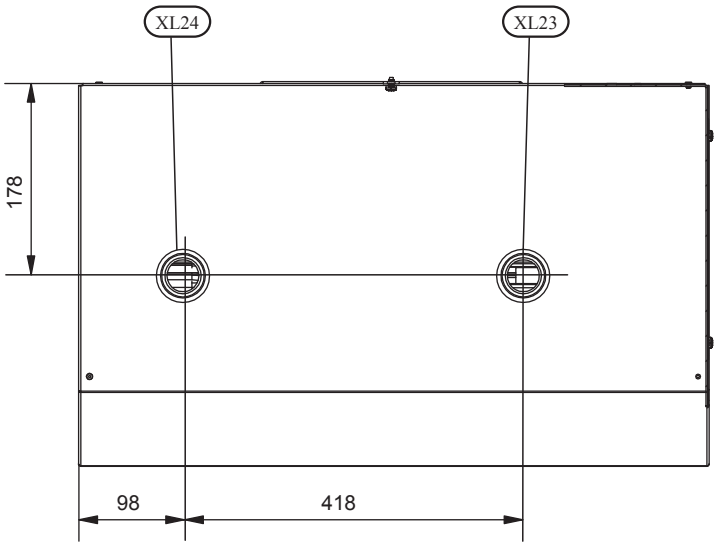

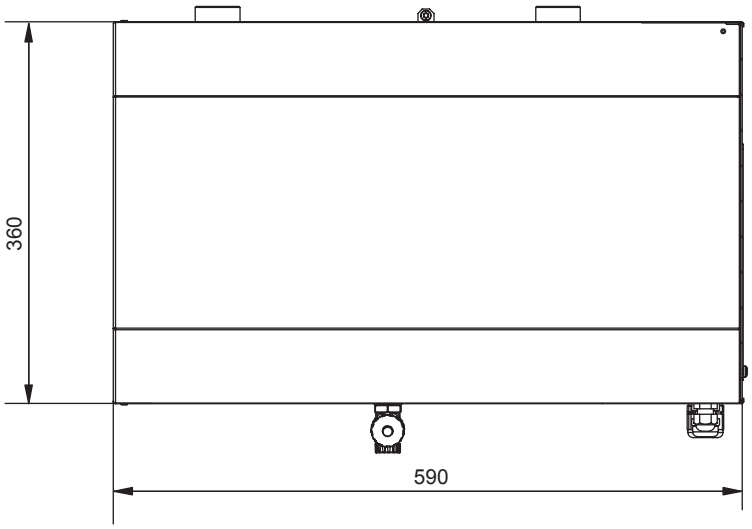

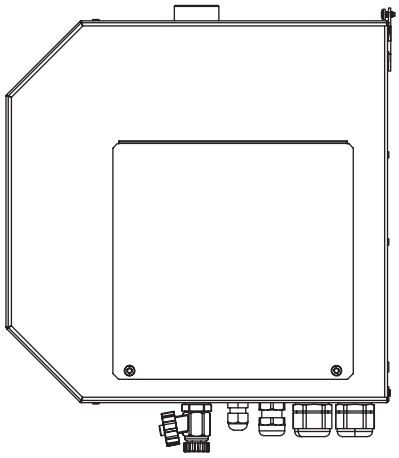

Symbol	contents	
XL23	Circulation supply	G1 ext (1")
XL24	Circulation return	G1 ext (1")

MT300

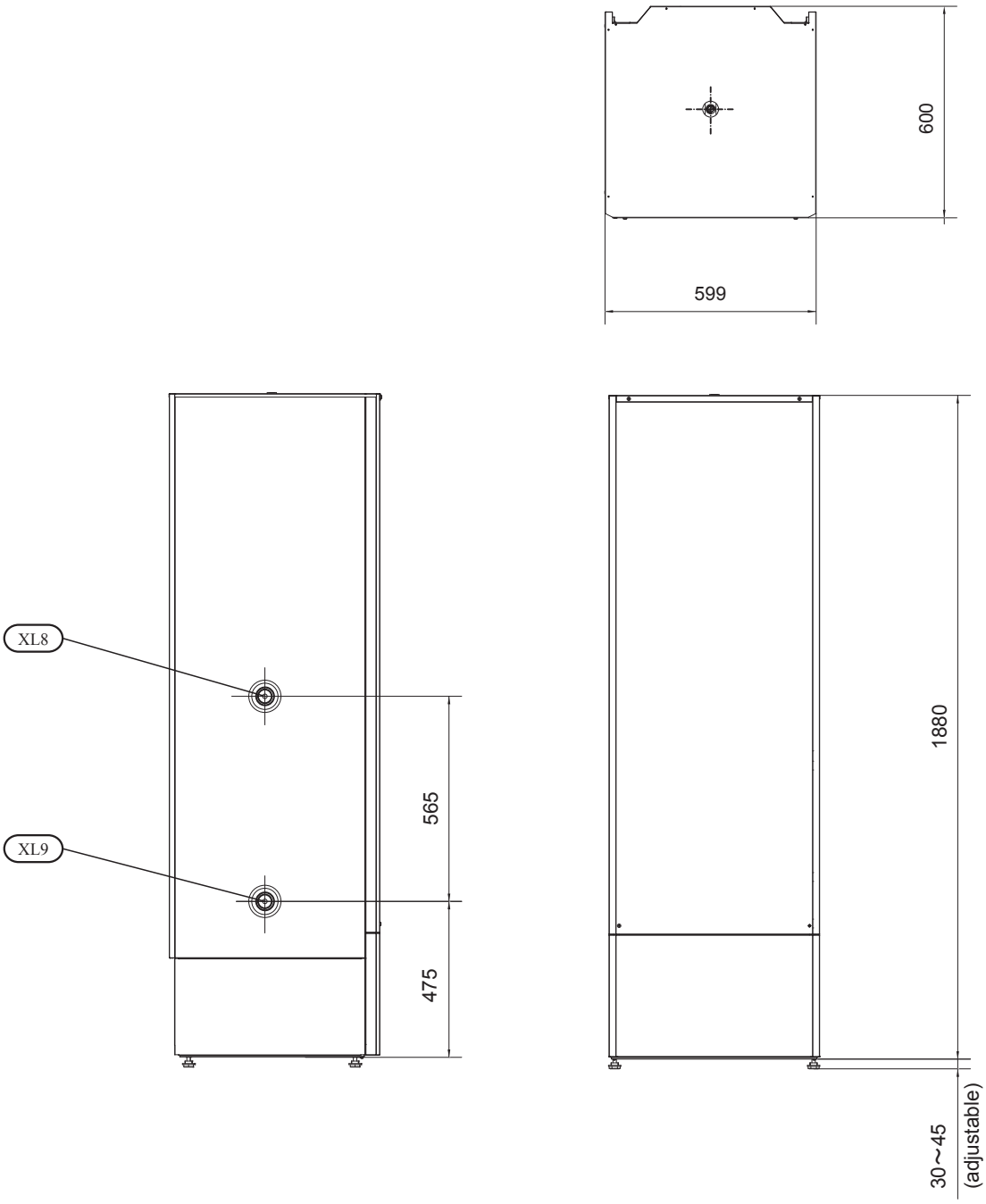

Symbol	contents	
XL3	Cold water	G1 ext. (1")
XL4	Hot water	G1 ext. (1")
XL8	External heat source in	R1 int
XL9	External heat source out	R1 int
XL23	Circulation supply	G1 ext. (1")
XL24	Circulation return	G1 ext. (1")

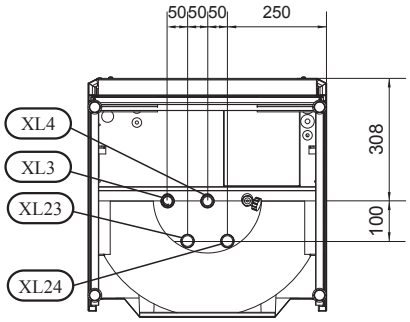

MT500

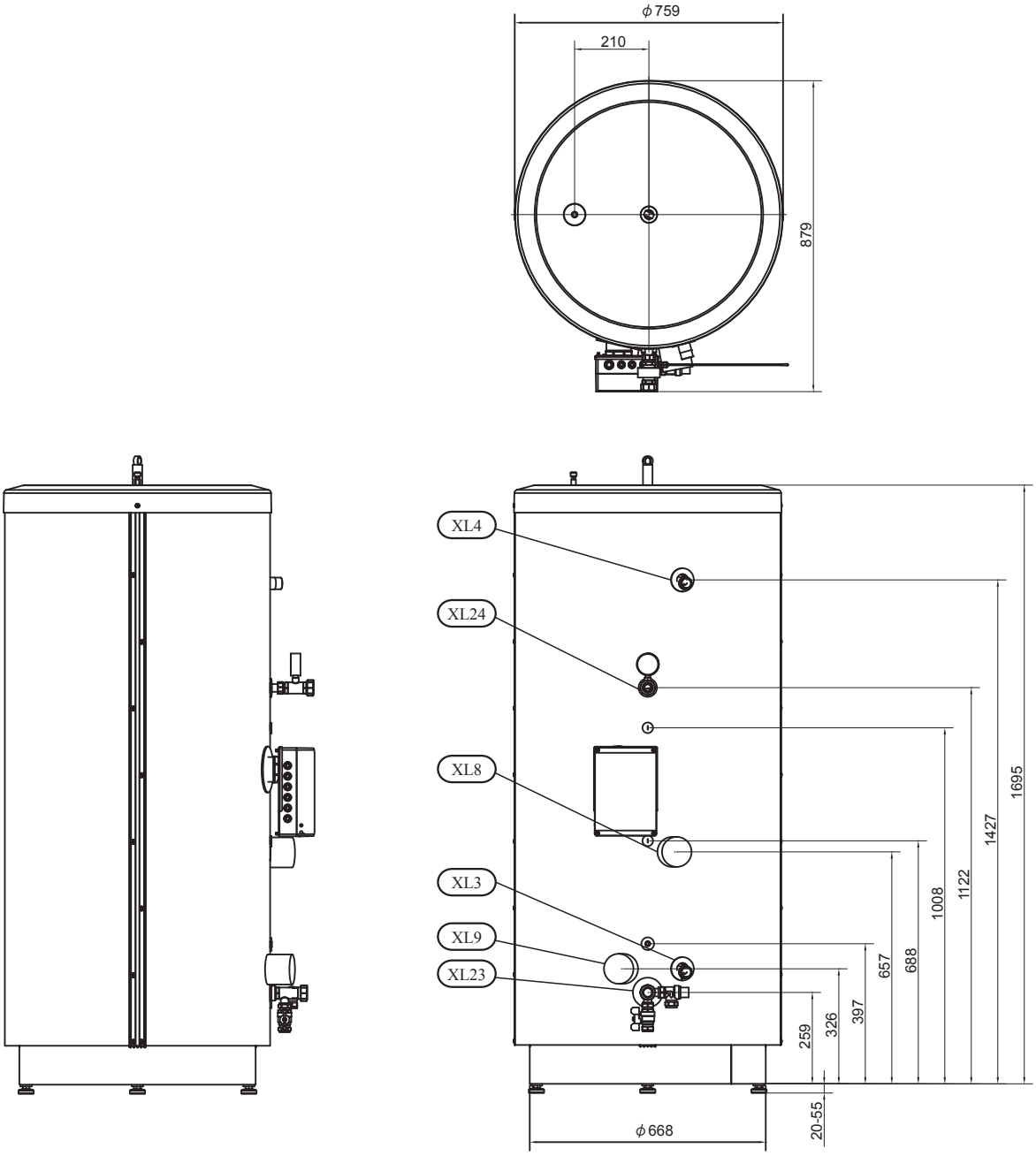

Symbol	contents	
XL3	Cold water	G1 ext.(1″)
XL4	Hot water	G1 ext.(1″)
XL8	External heat source in	G1 int
XL9	External heat source out	G1 int
XL23	Circulation supply	28 mm
XL24	Circulation return	28 mm

Outdoor unit

FDCW71VNX

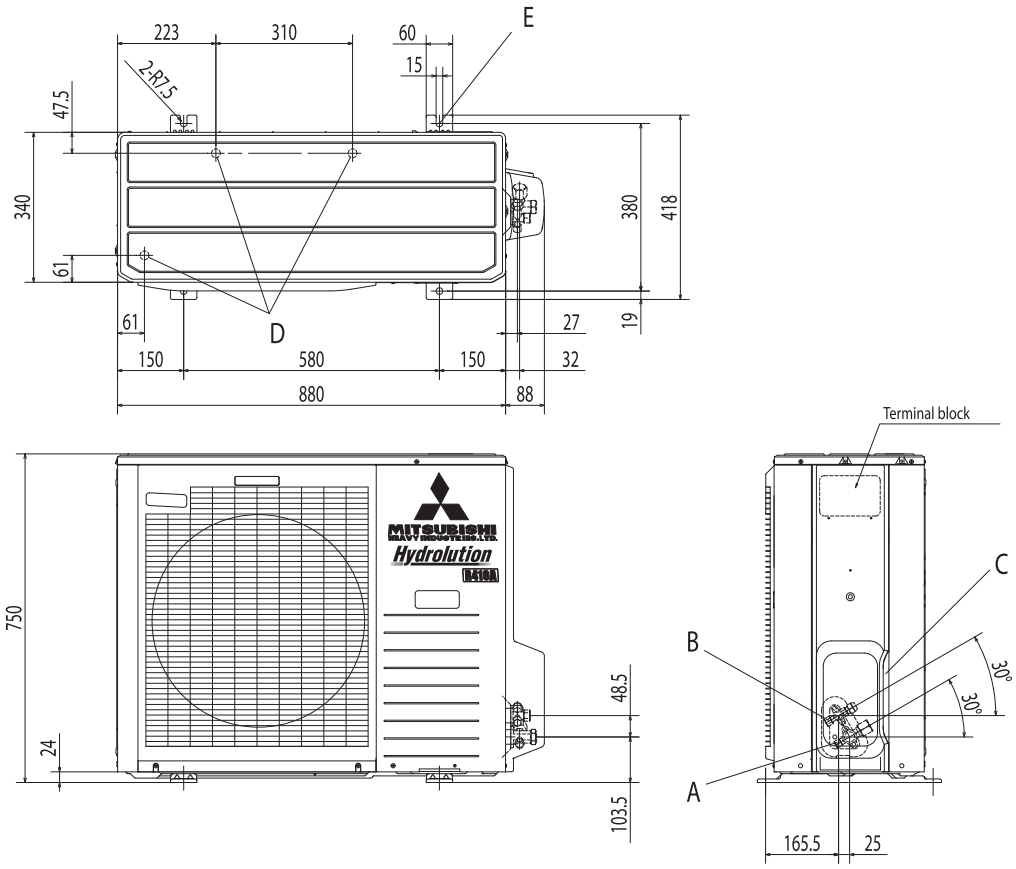

Symbol	Contents	
A	Service valve connection（gas side）	φ15.88（5／8"）（Flare）
B	Service valve connection（liquid side）	φ9.52（3／8"）（Flare）
C	Pipe／cable draw-out hole	
D	Drain discharge hole	φ20 × 3places
E	Anchor bolt hole	M10 × 4places

Notes
（1）It must not be surrounded by walls on the four sides.
（2）The unit must be fixed with anchor bolts. An anchor bolt must not protrude more the 15mm.
（3）Where the unit is subject to strong winds, lay it in such a direction that the blower outlet faces perpendicularly to the dominant wind direction.
（4）Leave 1m or more space above the unit.
（5）A wall in front of the blower outlet must not exceed the units height.
（6）The model name label is attached on the lower right corner of the front panel.

FDCW100VNX

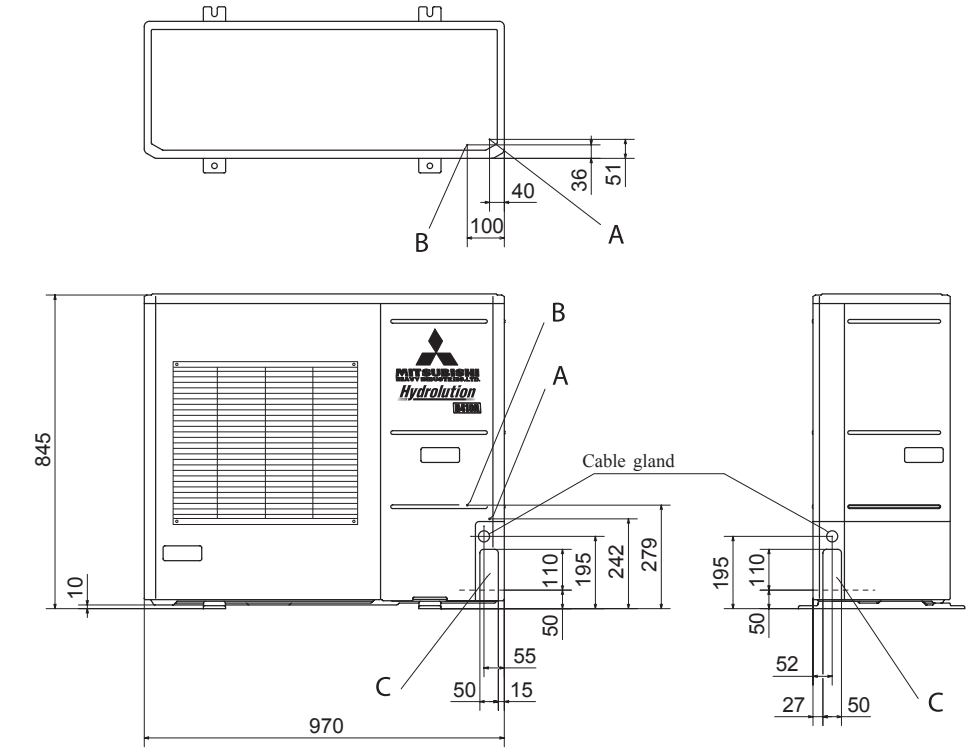

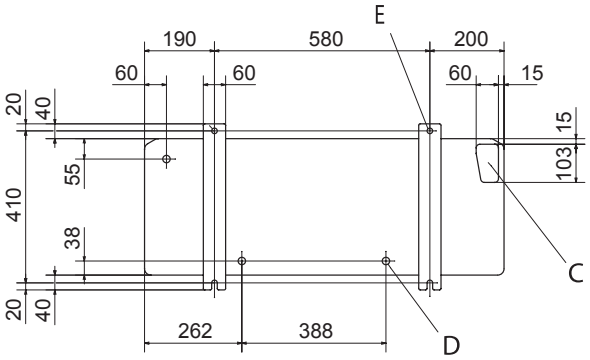

Symbol	Contents	
A	Service valve connection（gas side）	φ15.88（5／8"）（Flare）
B	Service valve connection（liquid side）	φ9.52（3／8"）（Flare）
C	Pipe／cable draw-out hole	
D	Drain discharge hole	φ20×3places
E	Anchor bolt hole	M10×4places
F	Cable draw-out hole	φ30（front） φ45（side） φ50（back）

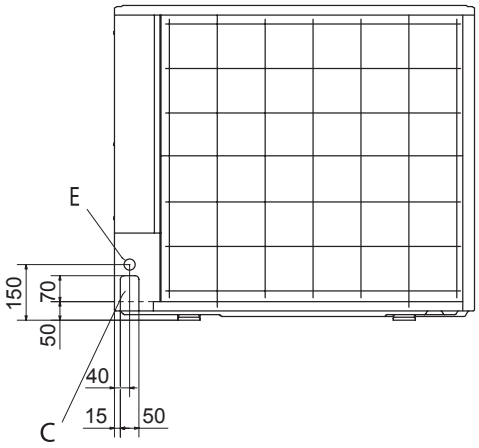

Notes
（1）It must not be surrounded by walls on the four sides.
（2）The unit must be fixed with anchor bolts. An anchor bolt must not protrude more than 15mm.
（3）Where the unit is subject to strong winds, lay it in such a direction that the blower outlet faces perpendicularly to the dominant wind direction.
（4）Leave 1m or more space above the unit.
（5）A wall in front of the blower outlet must not exceed the units height.
（6）The model name label is attached on the lower right corner of the front panel.

FDCW140VNX

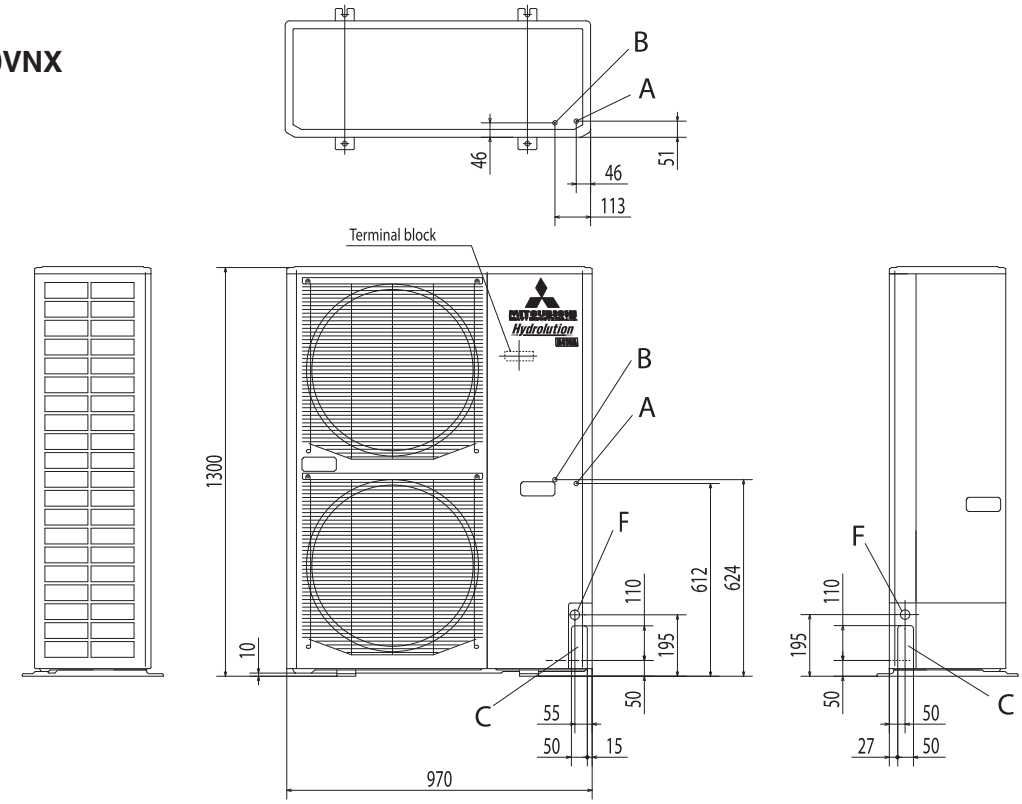

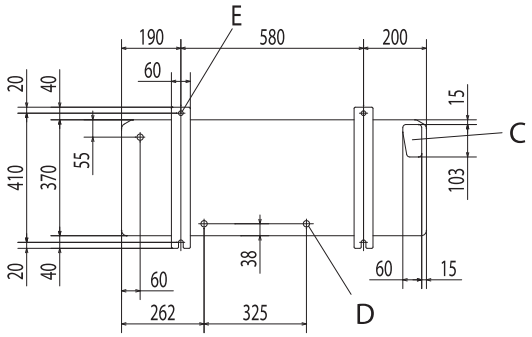

Symbol	Contents	
A	Service valve connection（gas side）	φ15.88（5／8"）（Flare）
B	Service valve connection（liquid side）	φ9.52（3／8"）（Flare）
C	Pipe／cable draw-out hole	
D	Drain discharge hole	φ20 × 3places
E	Anchor bolt hole	M10 × 4places
F	Cable draw-out hole	φ30（front） φ45（side） φ50（back）

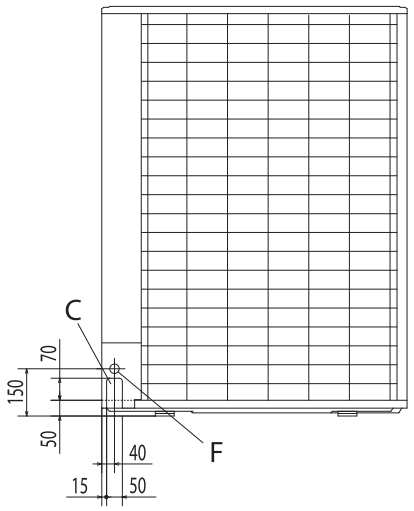

Notes
（1）It must not be surrounded by walls on the four sides.
（2）The unit must be fixed with anchor bolts. An anchor bolt must not protrude more than 15mm.
（3）Where the unit is subject to strong winds, lay it in such a direction that the blower outlet faces perpendicularly to the dominant wind direction.
（4）Leave 1m or more space above the unit.
（5）A wall in front of the blower outlet must not exceed the units height.
（6）The model name label is attached on the lower right corner of the front panel.

Electrical circuit diagram

Indoor unit

HMA100V

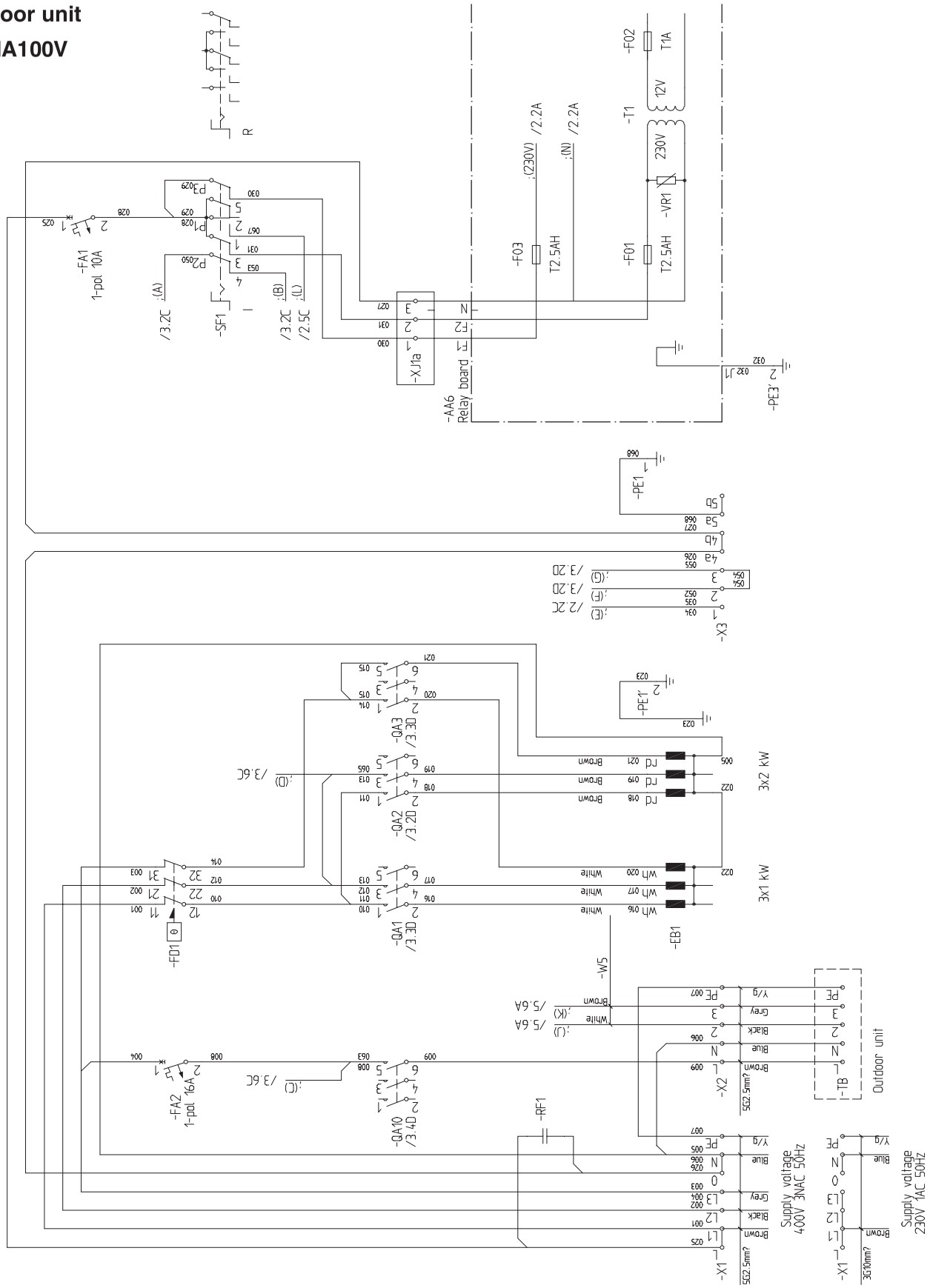

Electrical circuit diagram

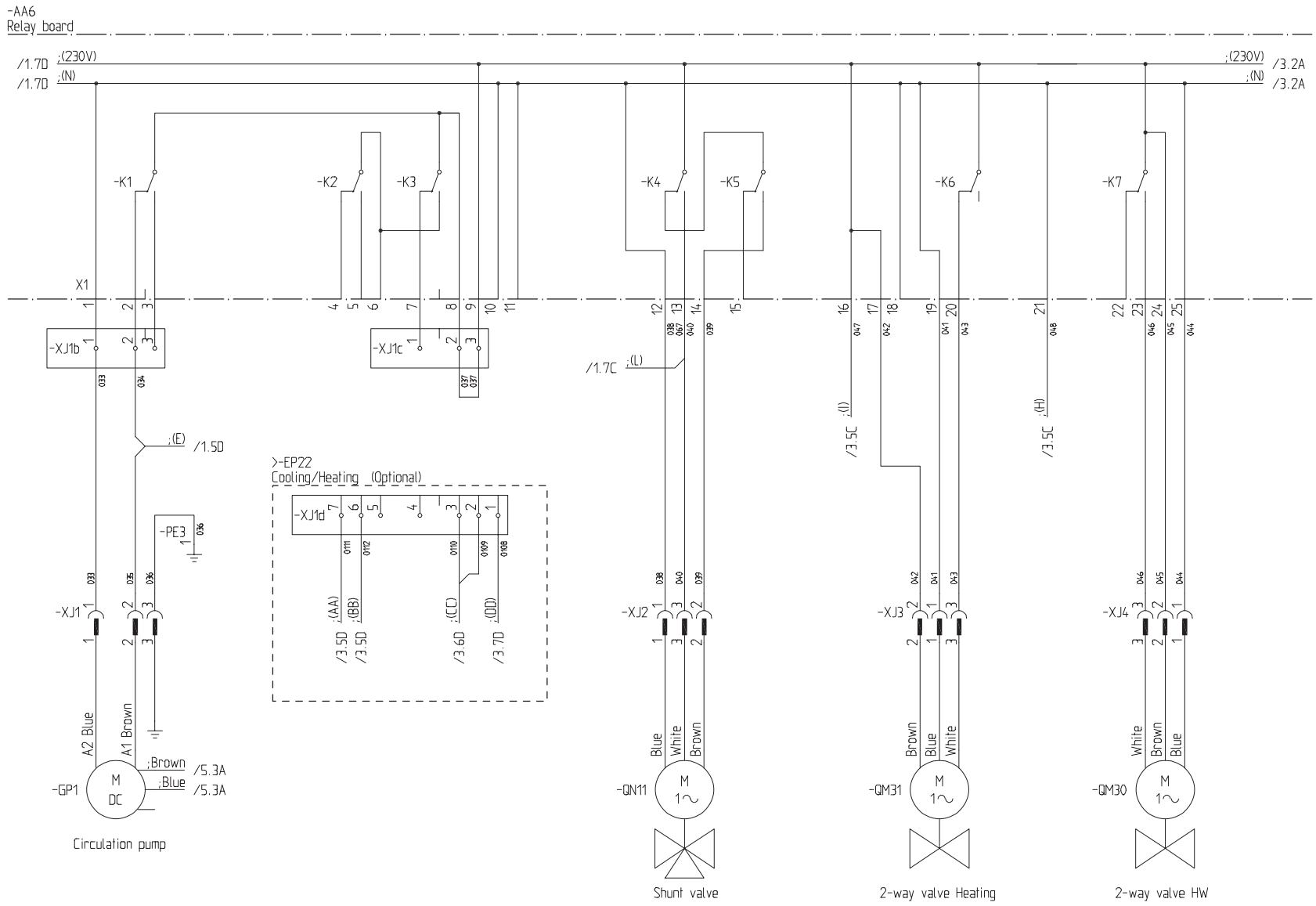

Electrical circuit diagram

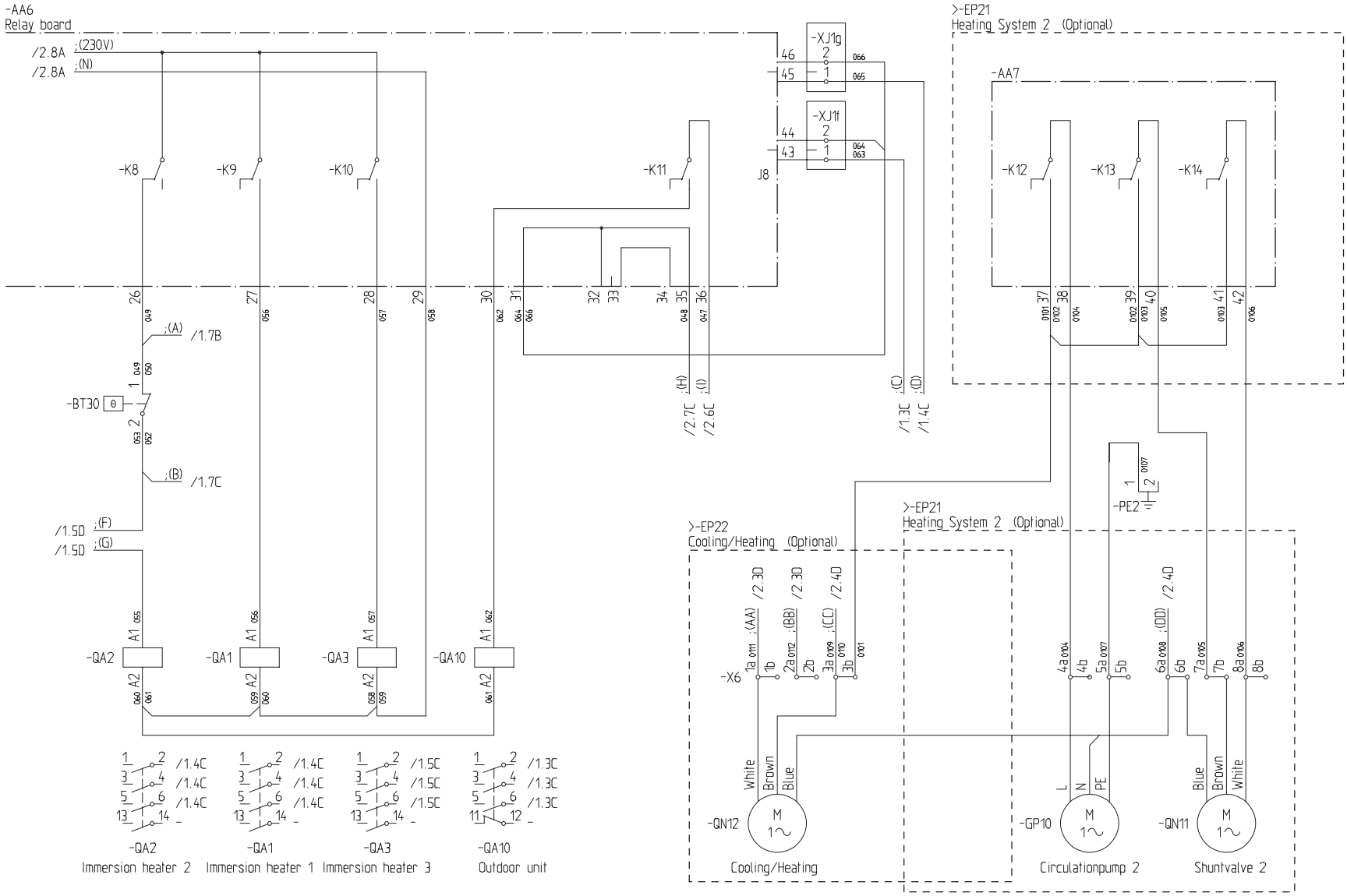

Electrical circuit diagram

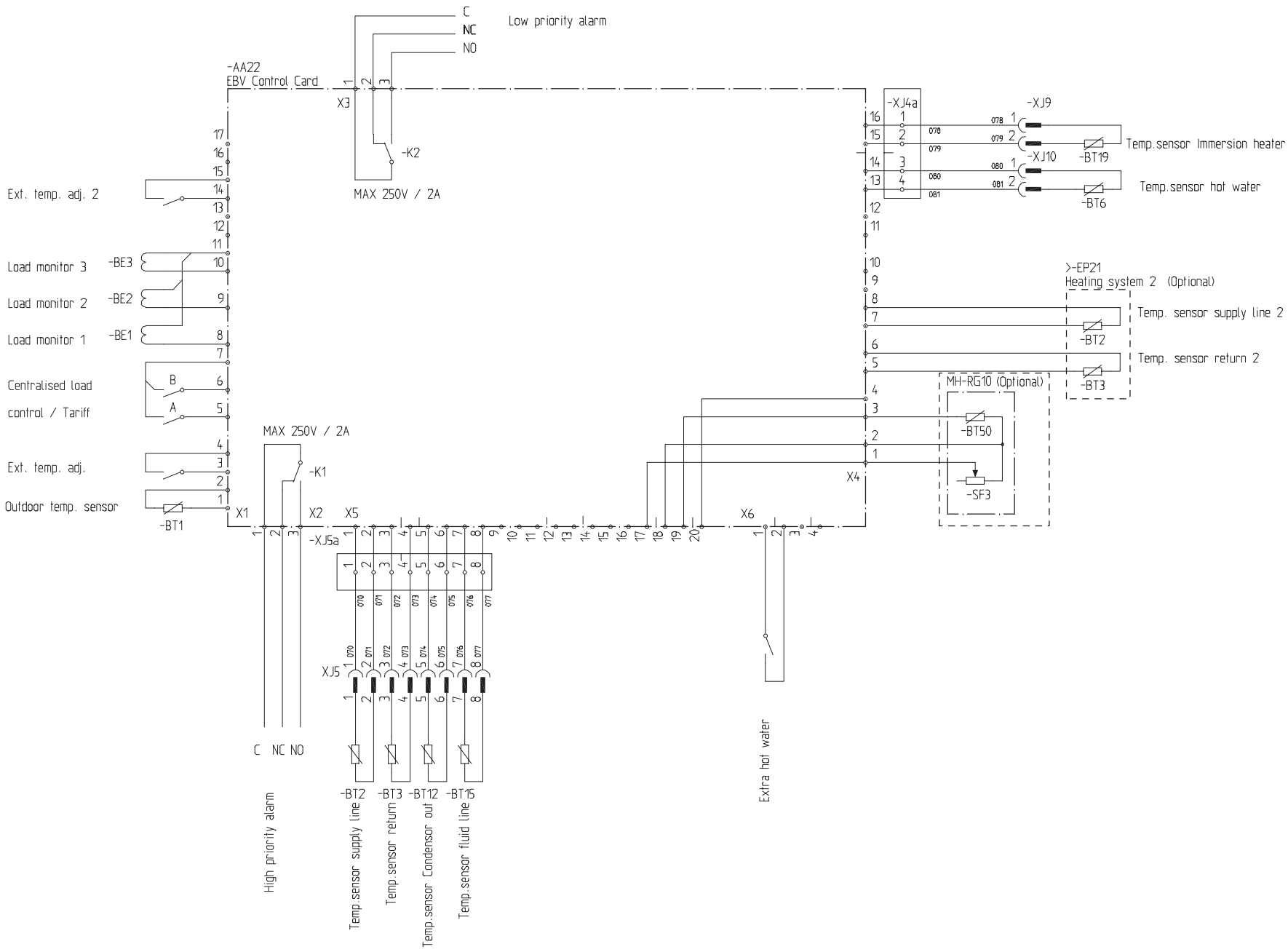

Electrical circuit diagram

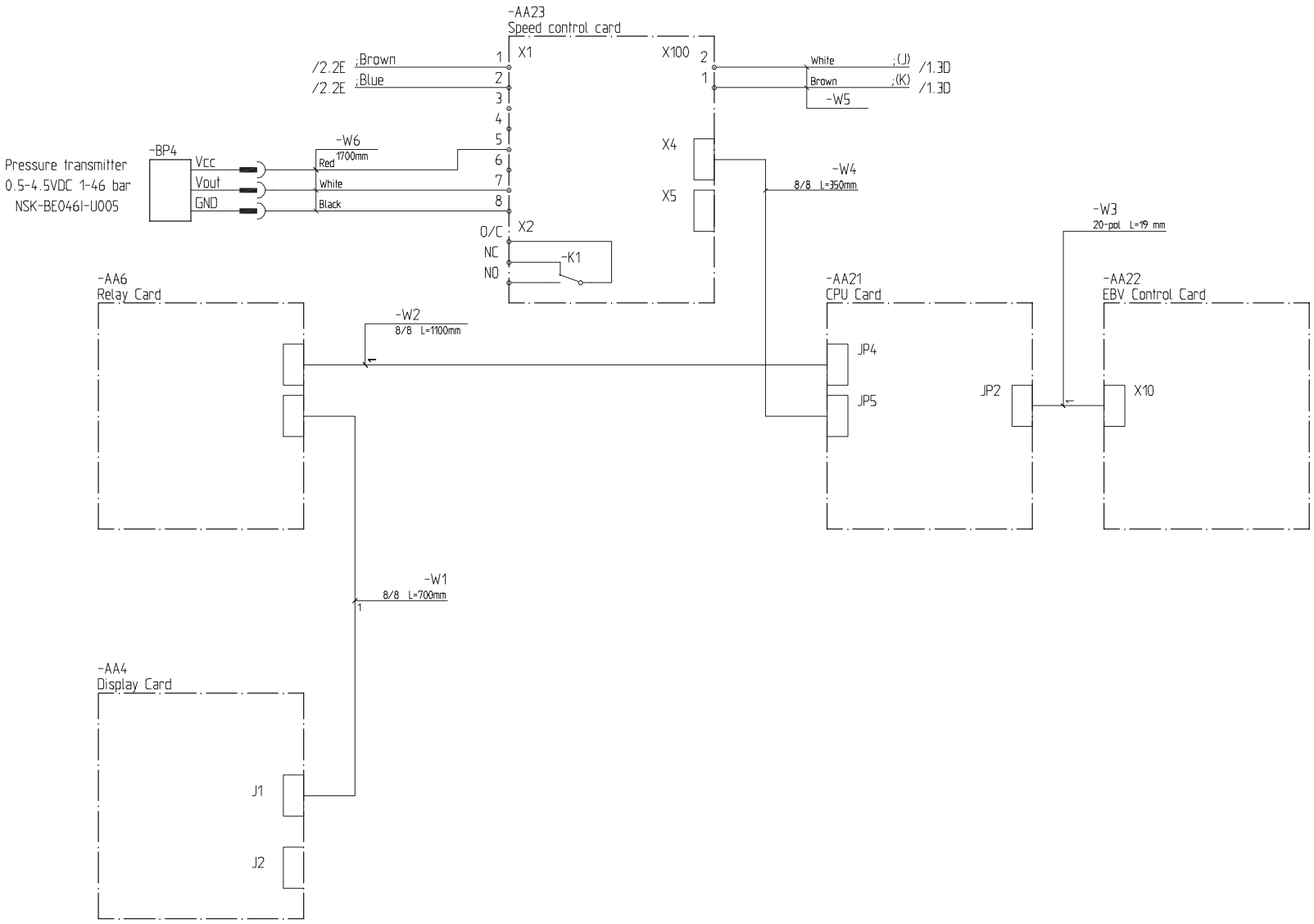

HMA100VM

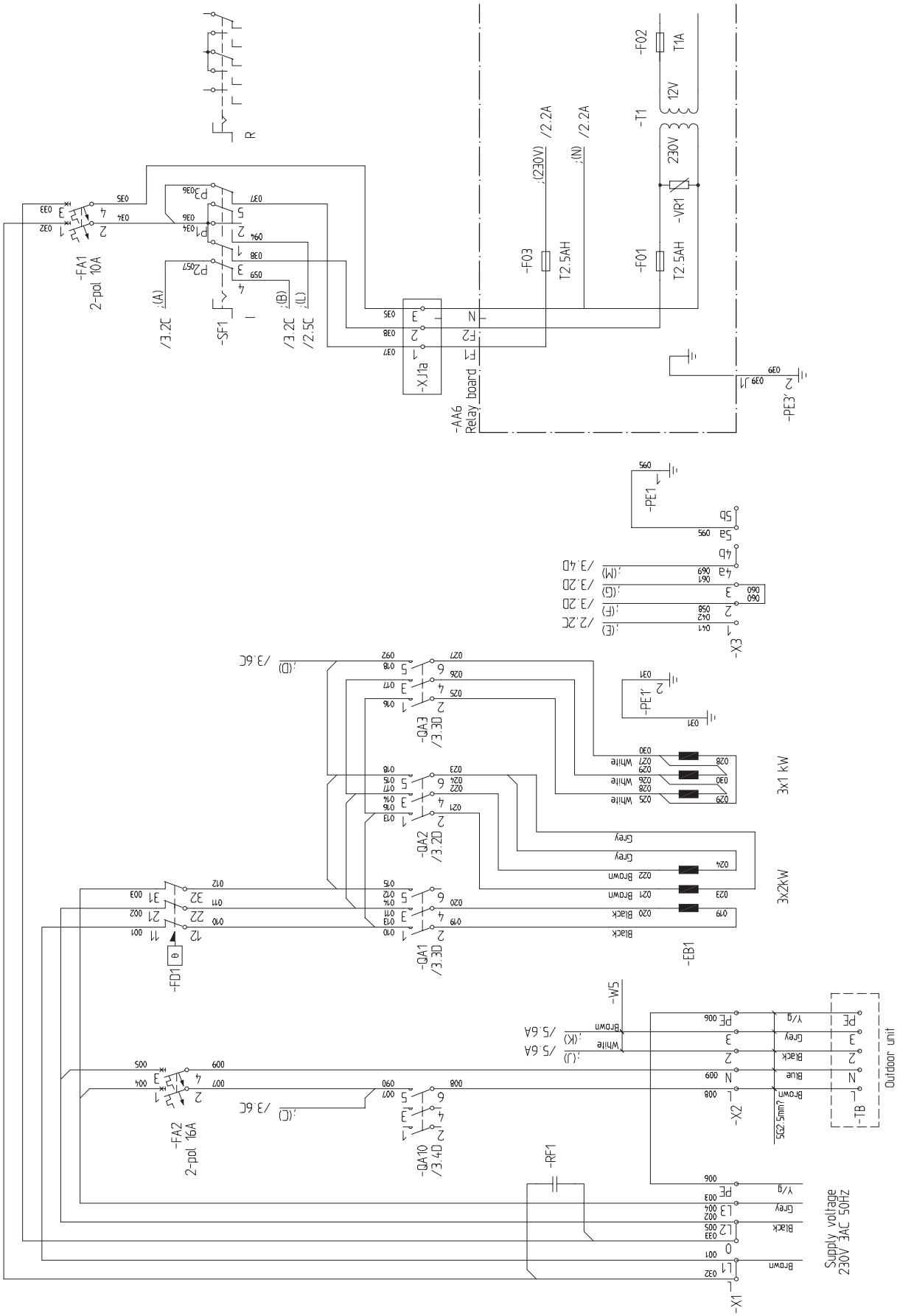
-FA1
2-pol 10A
-SF1
/3.2C
/2.5C
-X.J1a
-AA6
Relay board
-F03
T2.5AH
-F01
T2.5AH
-VR1
230V
-T1
12V
-F02
T1A
-PE3
-PE1
-X3
-PE1
-QA3
/3.3D
-QA2
/3.2D
-QA1
/3.3D
-FD1
-EB1
3x1 kW
3x2kW
-W5
-FA2
2-pol 16A
-QA10
/3.4D
-RF1
-X2
-TB
Outdoor unit
-X1
Supply voltage
230V 3AC 50Hz

Electrical circuit diagram

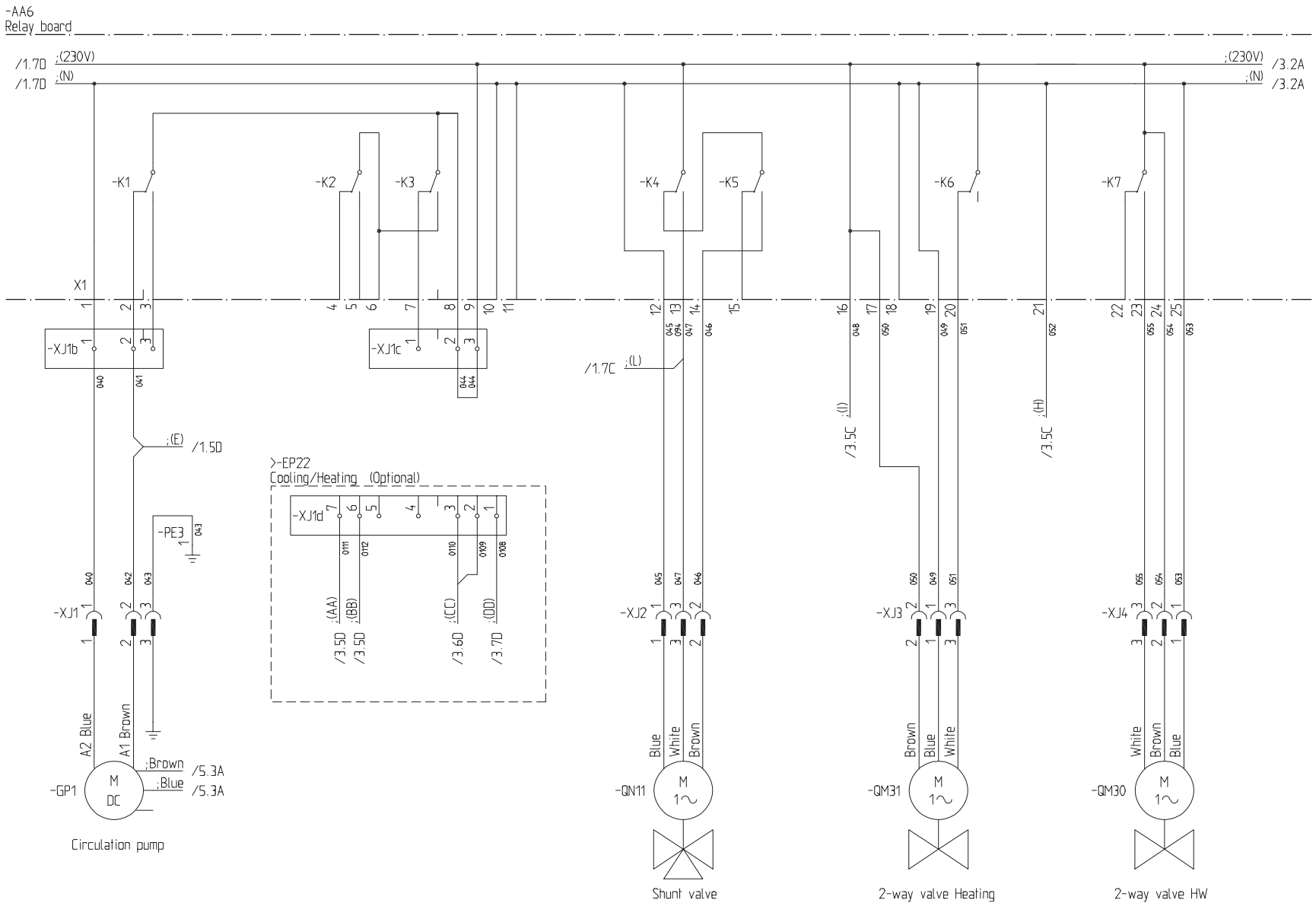

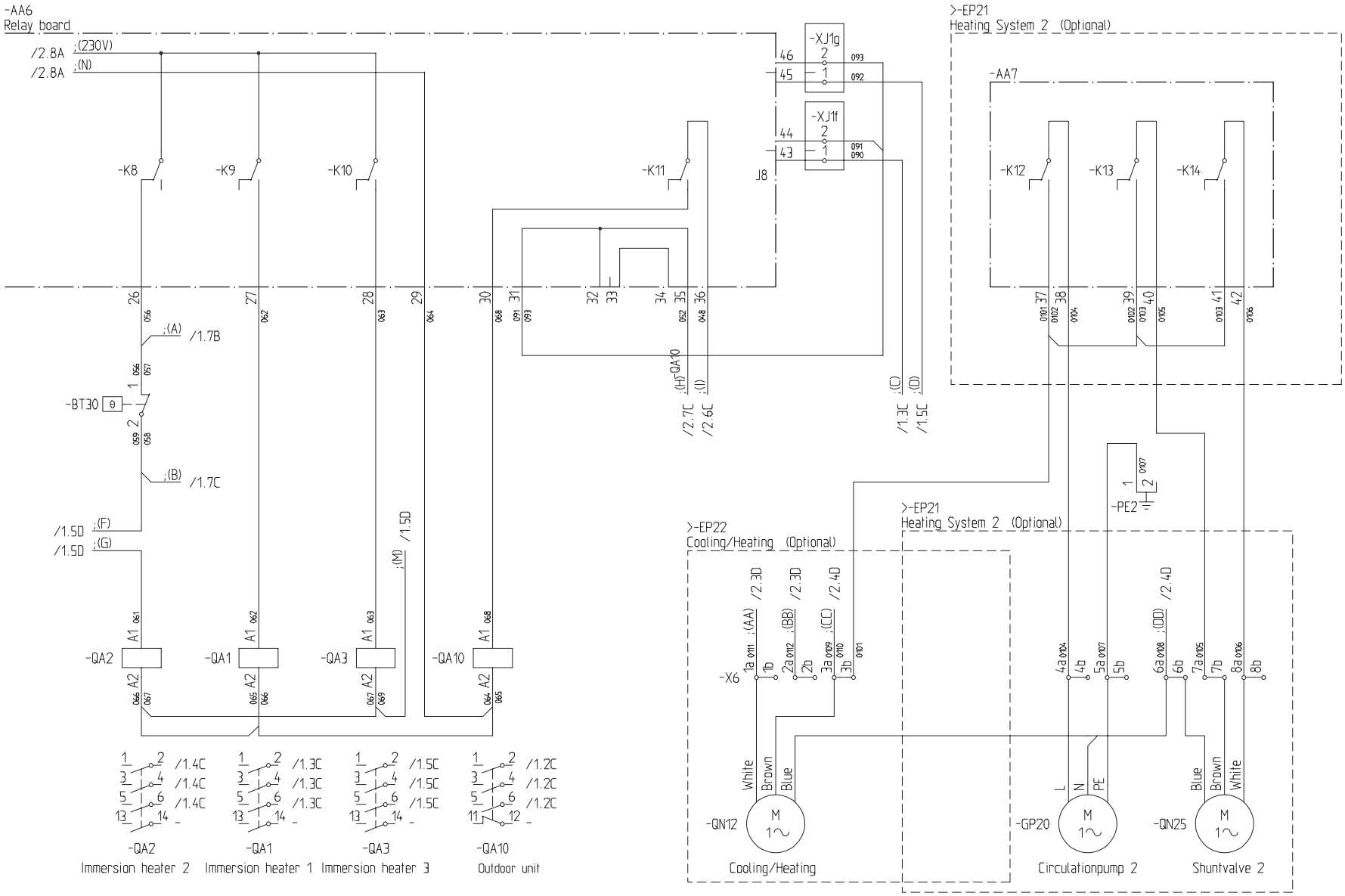
-AA6
Relay board
/2.8A ;(230V)
/2.8A ;(N)
-K8
-K9
-K10
-K11
-XJ1g
-XJ1f
J8
-BT30
;(A) /1.7B
;(B) /1.7C
/1.5D ;(F)
/1.5D ;(G)
;(M) /1.5D
;(H) QA10
;(I)
/2.7C
/2.6C
;(C)
;(D)
/1.3C
/1.5C
-QA2
-QA1
-QA3
-QA10
/1.4C
/1.3C
/1.5C
/1.2C
Immersion heater 2
Immersion heater 1
Immersion heater 3
Outdoor unit
>-EP21
Heating System 2 (Optional)
-AA7
-K12
-K13
-K14
-PE2
>-EP22
Cooling/Heating (Optional)
-X6
/2.3D
/2.4D
;(AA)
;(BB)
;(CC)
;(DD)
White
Brown
Blue
-QN12
Cooling/Heating
-GP20
Circulationpump 2
-QN25
Shuntvalve 2

Electrical circuit diagram

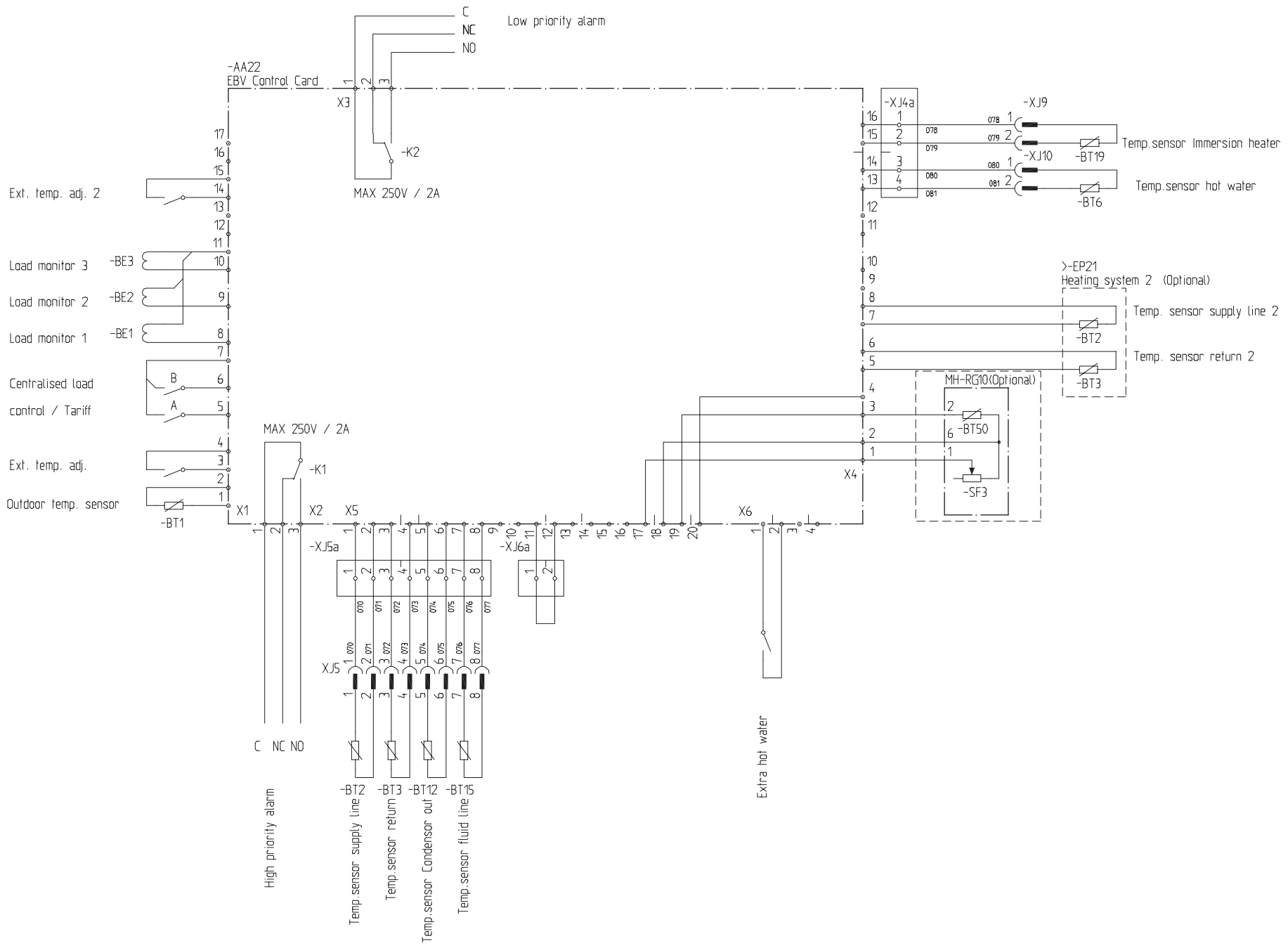

Electrical circuit diagram

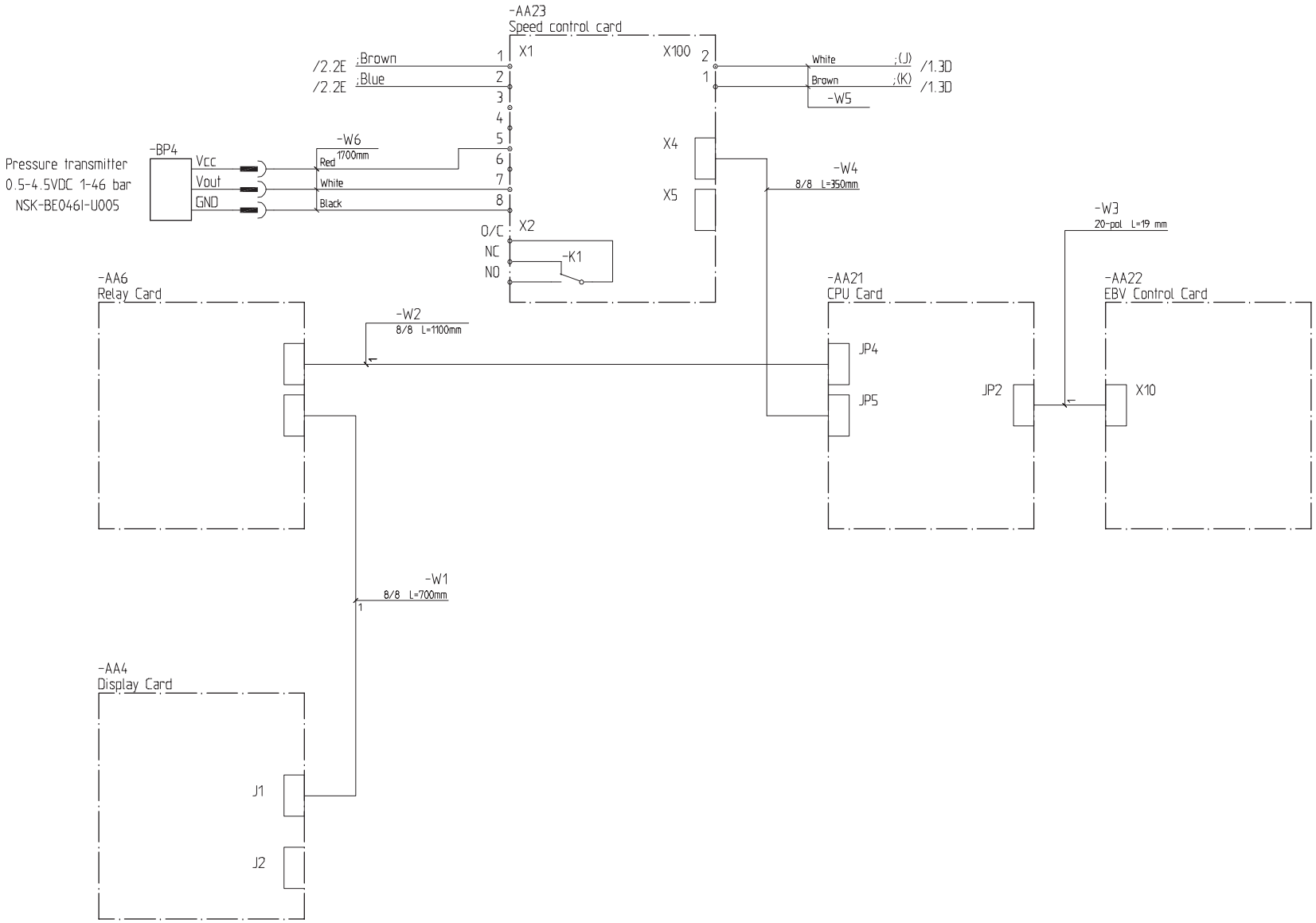

HMS140V（HT30，MT300，MT500）

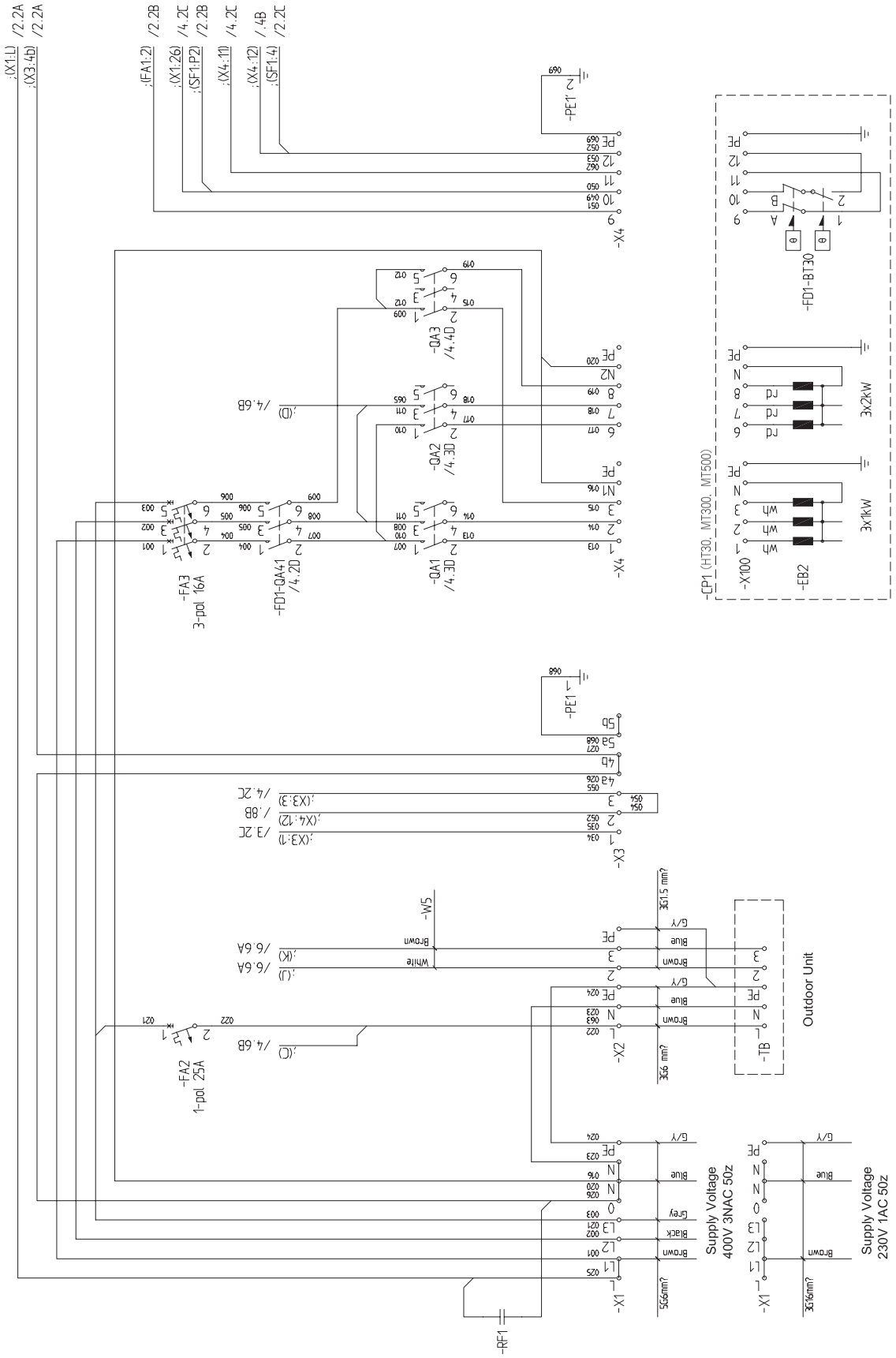

Electrical circuit diagram

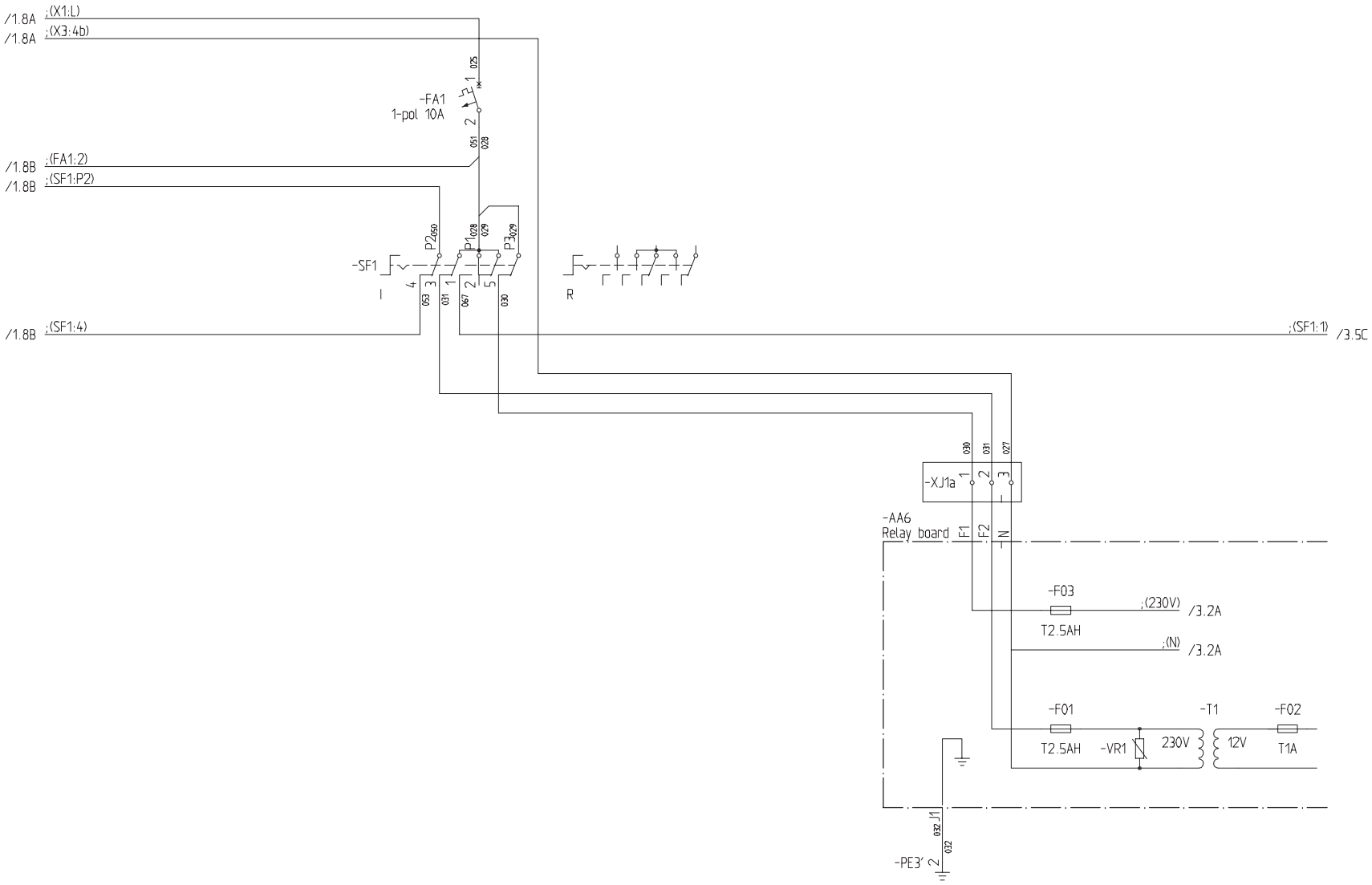

Electrical circuit diagram

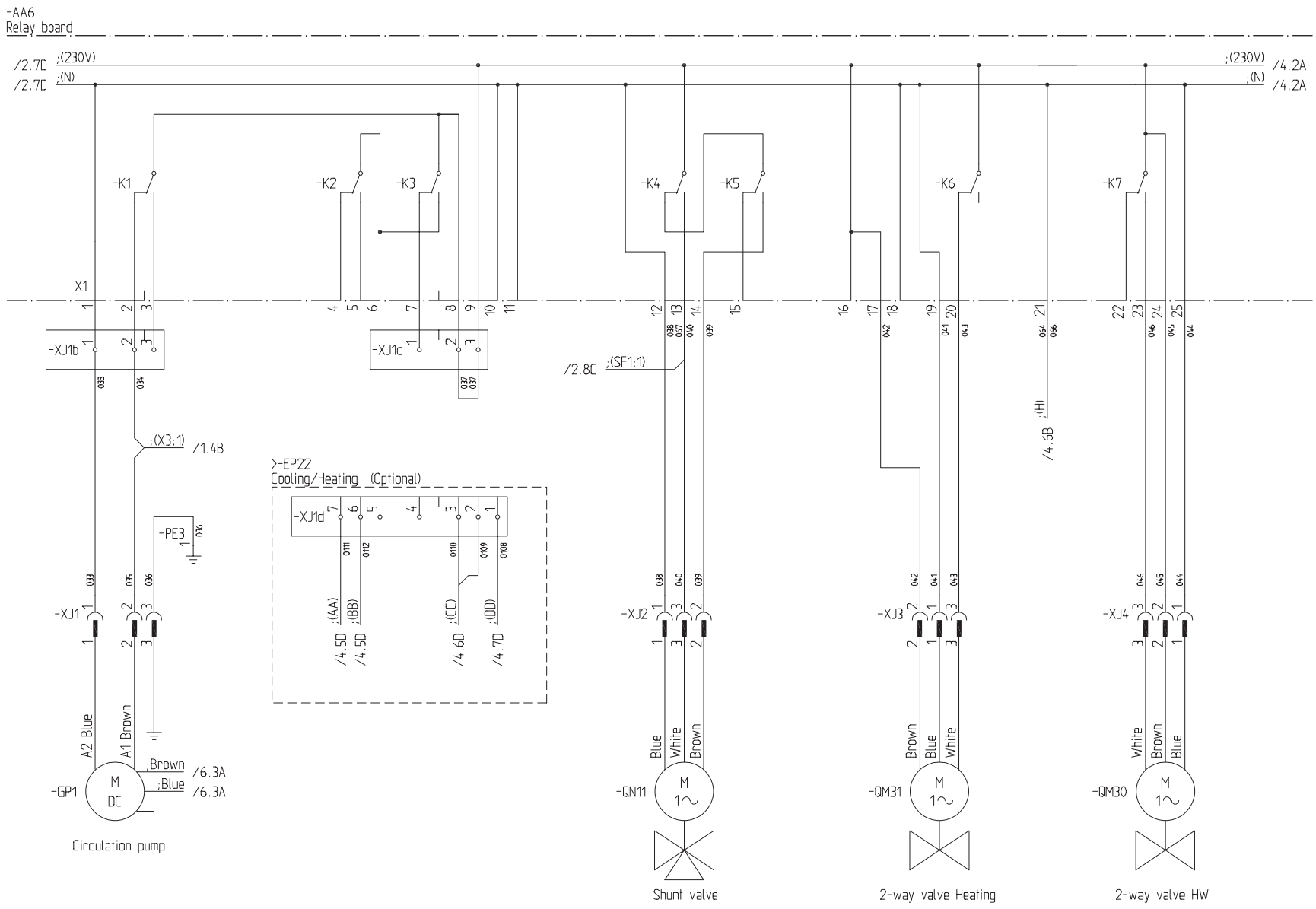

Electrical circuit diagram

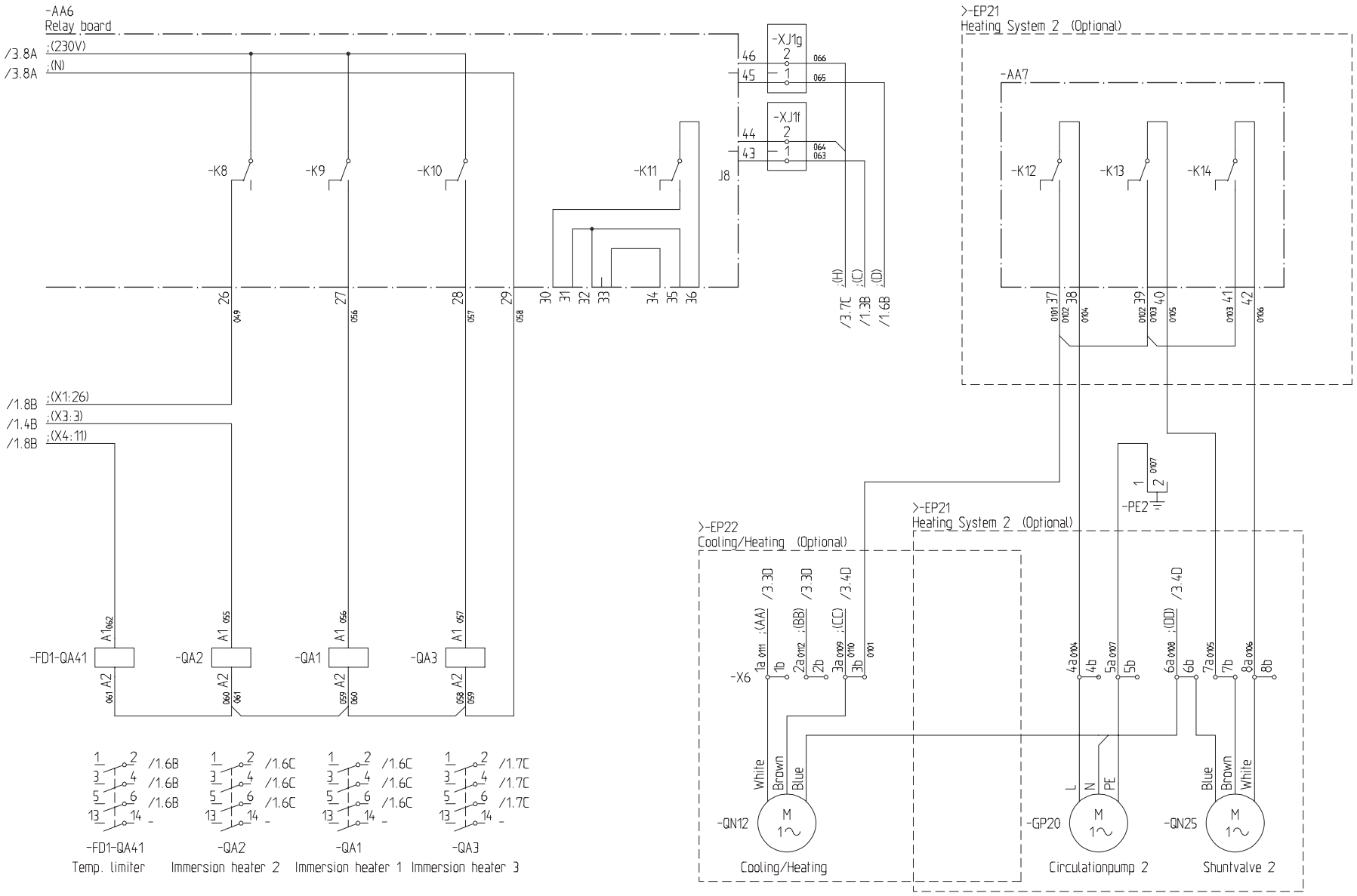

Electrical circuit diagram

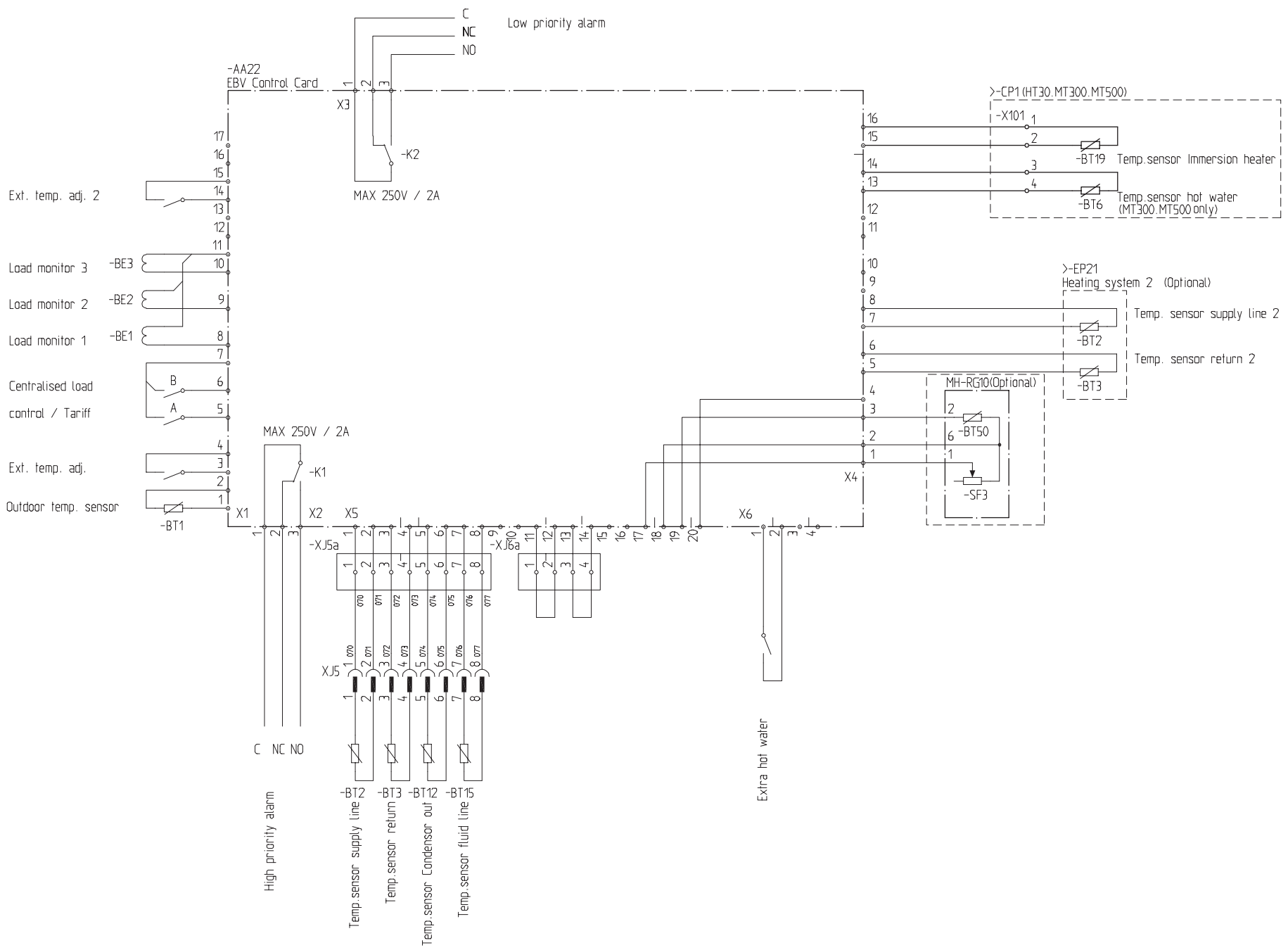

Electrical circuit diagram

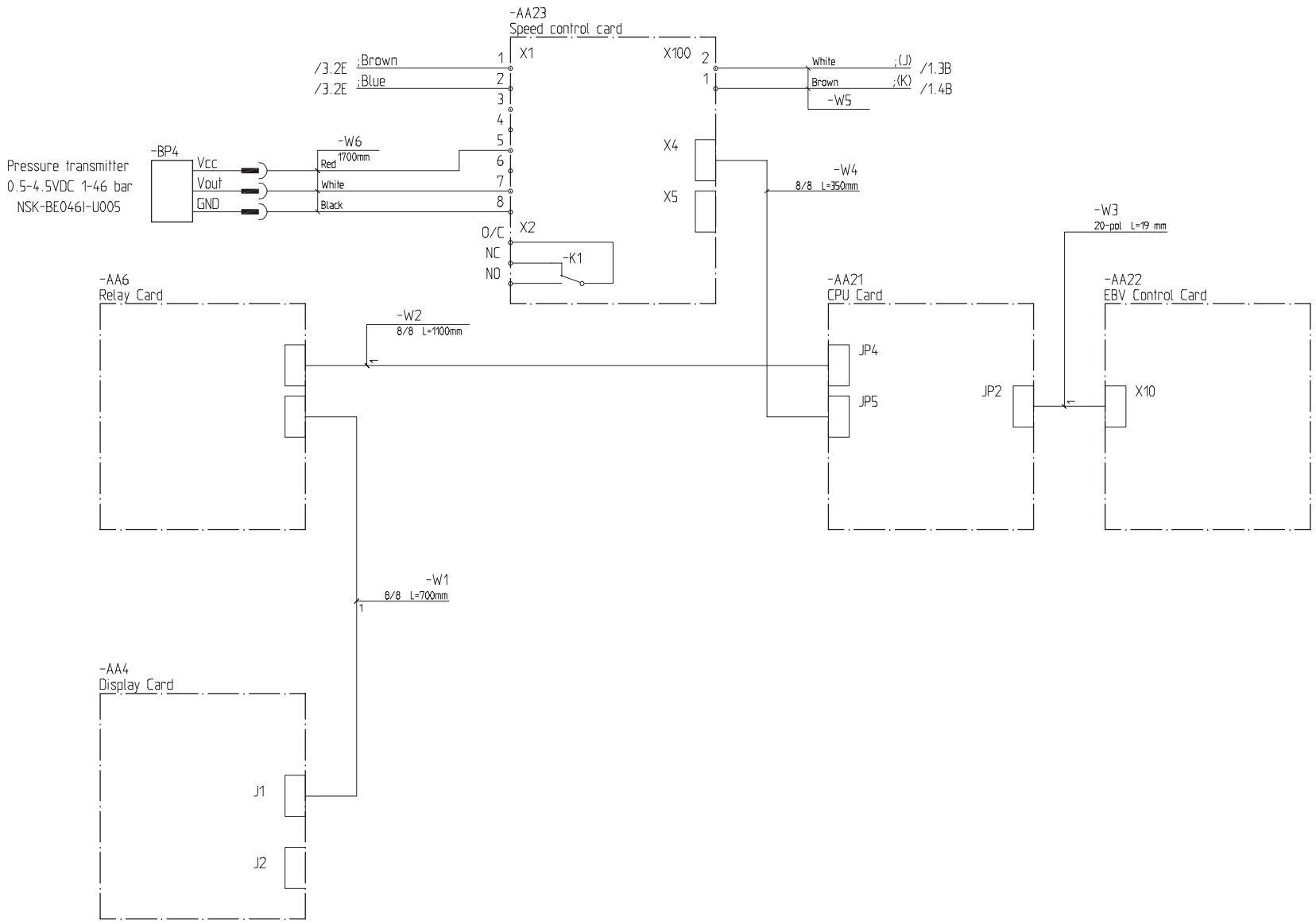

Outdoor unit

FDCW 71VNX

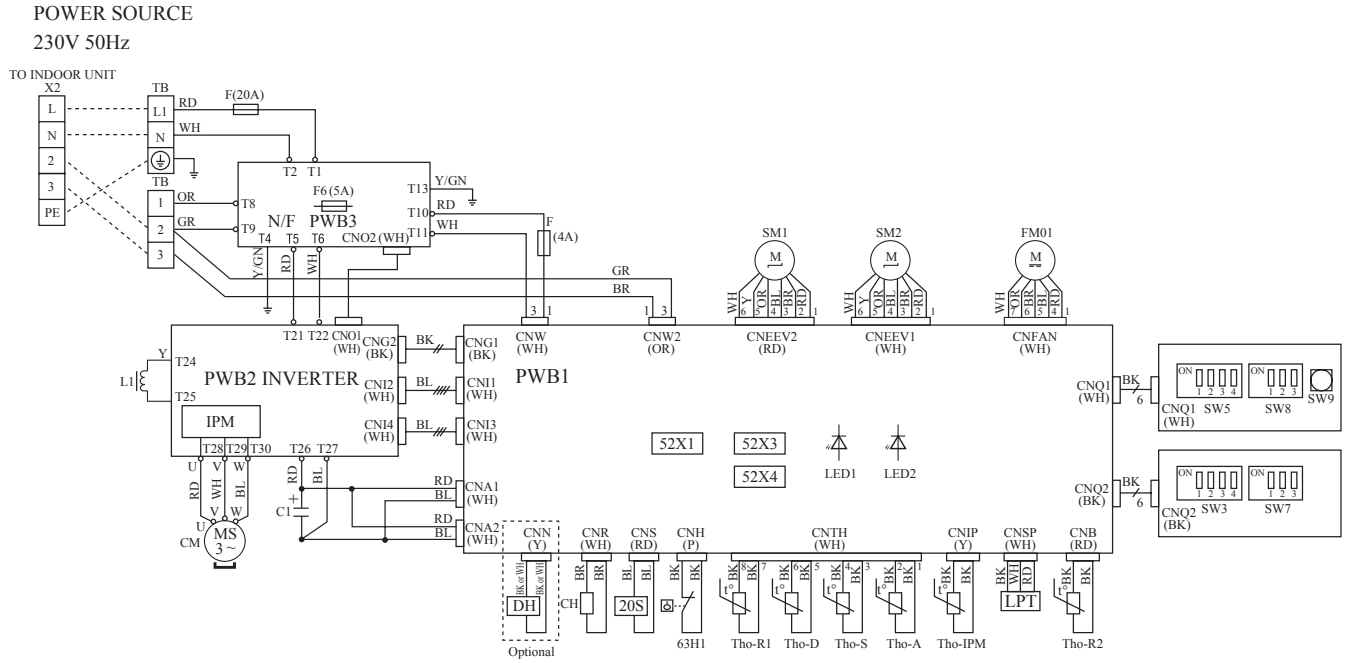

Designation	Description
20S	Solenoid valve for 4 way valve
52X1	Auxiliary relay (for CH)
52X3	Auxiliary relay (for 20S)
52X4	Auxiliary relay (for DH)
63H1	High pressure switch
C1	Capacitor
CH	Crankcase heater
CM	Compressor motor
CnA～Z	Connector
DH	Drain pan heater (accessory)
F	Fuse
FM01	Fan motor
IPM	Intelligent power module
L1	Reactor
LED1	Indication lamp (green)
LED2	Indication lamp (red)
LPT	Low pressure sensor
SM1	Expansion valve for cooling
SM2	Expansion valve for heating
SW3,5,7,8	Local setting switch
SW9	Pump down switch
TB	Terminal block

Designation	Description
Tho-A	Temperature sensor, outdoor air
Tho-D	Temperature sensor, hot gas
Tho-IPM	Temperature sensor, IPM
Tho-R1	Temperature sensor, heat exchanger out
Tho-R2	Temperature sensor, heat exchanger in
Tho-S	Temperature sensor, Suction gas

Electrical circuit diagram

FDCW 100VNX, 140VNX

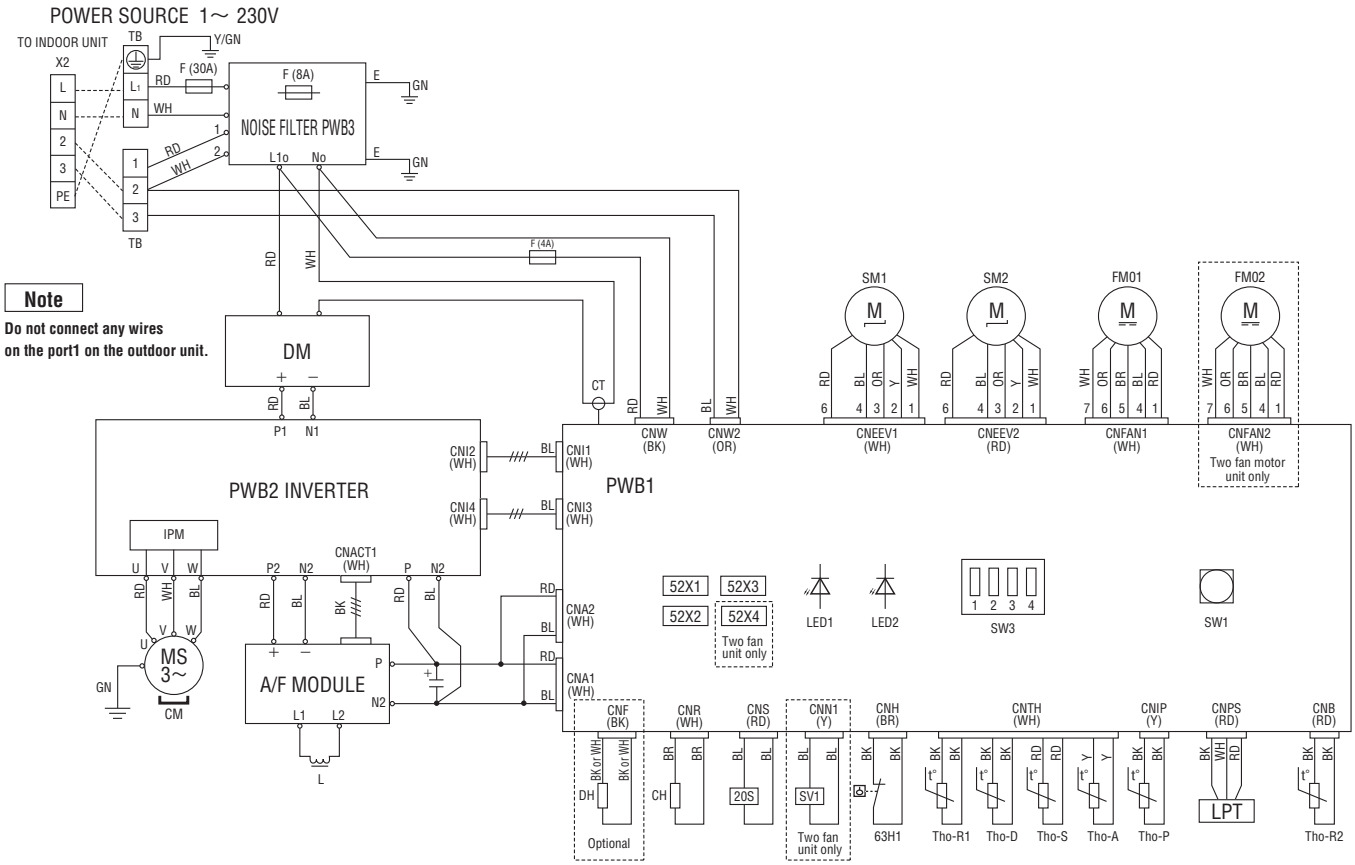

Designation	Description
20S	Solenoid valve for 4-way valve
52X1	Auxiliary relay (for CH)
52X2	Auxiliary relay (for DH)
52X3	Auxiliary relay (for 20S)
52X4	Auxiliary relay (for SV1)
63H1	High pressure switch
CH	Crankcase heater
CM	Compressor motor
CT	Current sensor
DH	Drain pan heater (accessory)
DM	Diode module
F	Fuse
FMo1	Fan motor
IPM	Intelligent power module
L	Reactor
LED1	Indication lamp (green)
LED2	Indication lamp (red)
LPT	Low pressure sensor
SM1	Expansion valve for cooling
SM2	Expansion valve for heating
SV1	Solenoid valve
SW1	Pump down switch
SW3	Local setting switch
TB	Terminal block
Tho-A	Temperature sensor, outdoor air

Designation	Description
Tho-D	Temperature sensor, hot gas
Tho-P	Temperature sensor, IPM
Tho-R1	Temperature sensor, heat exchanger out
Tho-R2	Temperature sensor, heat exchanger in
Tho-S	Temperature sensor, suction gas

For Home Owners

Information about the installation

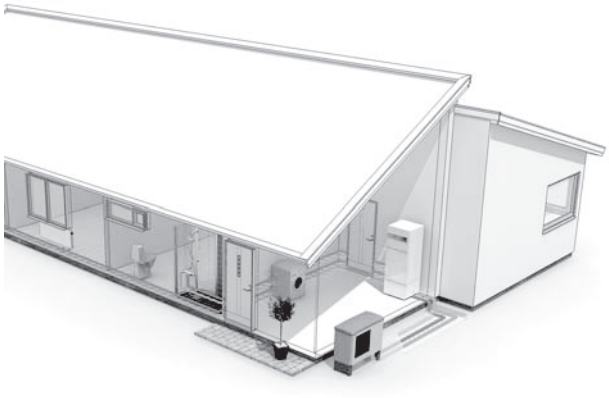

Product information

Hydrolution is a complete modern heat pump system that offers effective technical energy saving and reduced carbon dioxide emissions. Heat production is safe and economical with integrated hot water heater, immersion heater, circulation pump and climate system in the indoor unit.

The heat is retrieved from the outdoor air through outdoor unit, where the refrigerant circulated in a closed piping system transfers the heat from the heat source (outdoor air) to indoor unit.

This eliminates the for holes and coils in the ground.

Features of Hydrolution

- Optimal annual heating factor thanks to the inverter controlled compressor.
- Outdoor unit with compact dimensions.
- Speed controlled system pump that supplies the heat pump with suitable system flow.
- Optimized operating costs. The speed of the compressor is adjusted according to the demand.
- Integrated coil water heater in indoor unit.
- Integrated clock for scheduling extra hot water and temperature lowering/increasing the supply water temperature.
- Prepared for control of two heating systems.
- Integrated active cooling function.
- Possible to connect external heat sources.

Principle of operation Hydrolution

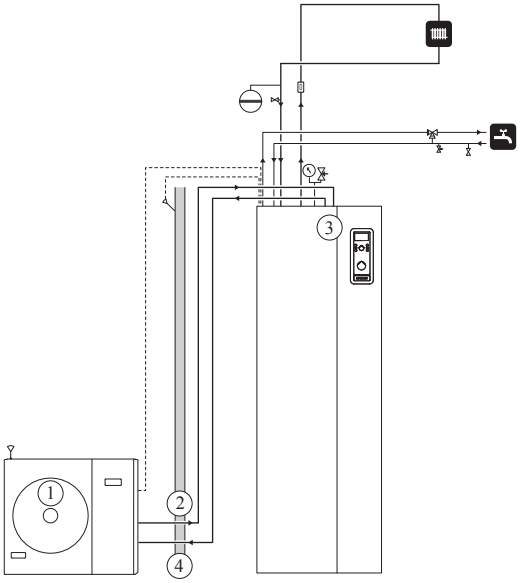

Function

Hydrolution is a system that can produce heating, hot water and cooling.

The principle during heating can be simplified as follows:

1. The refrigerant in outdoor unit takes the heat from the outdoor air and is compressed to higher temperature by the compressor.
2. The hot refrigerant (now in gas state) is routed into indoor unit.
3. The refrigerant releases the heat for further distribution in the system.
4. The refrigerant (now in liquid state) is routed back to outdoor unit and the process is repeated.

By reversing the entire process, and thereby the refrigerant in outdoor unit takes the heat from the water and release the heat to the outdoor air, the heat pump can cool instead if necessary.

Indoor unit determines when outdoor unit is to work and not to work, using the collated data from the temperature sensor. In the event of extra heat demands, indoor unit can connect additional heat source in the form of the internal immersion heater, or any connected external heat source.

Front panel, indoor unit

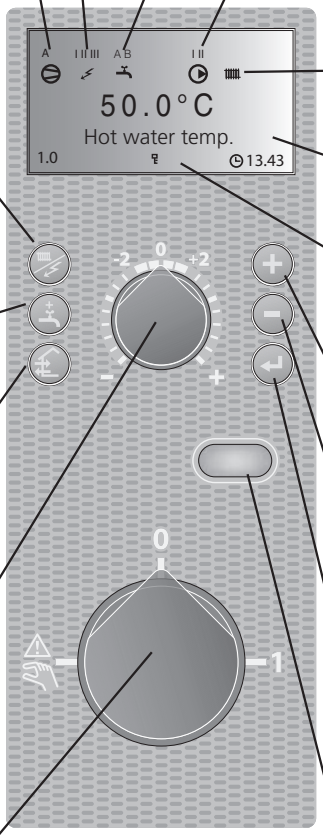

Addition. heat symbol

If the electrical addition is connected
"I" Electrical step 1
"II" Electrical step 2
"I II" Electrical step 1+2
"III" Electrical step 3

Compressor symbol

- Compressor is operational
"A" Heating mode
"B" Cooling mode

Operating status

Button pressing (the change does not need to be confirmed with the enter button). - Current operating mode shown in display - Further button press changes operating mode. Press the enter button to return to the normal display mode.

For information about the various operating modes, see the different sections regarding comfort settings.

Extra hot water (XHW)

Extra hot water operation starts with this button.The operation is cancelled when the button is pressed again.
The change does not need to be confirmed with the Enter button.

Menu 1.0

Pressing the button takes you directly to menu 1.0.

Offset heating curve

- Turning clockwise (+) offsets the Heating curve.When the knob is turned menu 2.0 is shown on the display and the value for the calculated supply temperature changes
For details, see Default Heating curve setting.

Switch

1 Normal mode
All control functions connected.

0 Shutdown

Emergency mode
Only the circulation pump and electric heater (electrical step 2) are operational.

Hot water symbol

Hot water charging in progress.
"A" Temporary Extra hot water operation in progress.
"B" Time based Extra hot water operation in progress, e.g. periodic.

Circulation pump symbol

Circulation pump in operation.
With two circulation pumps (requires ESV 22 accessory), the operating pump is also indicated.

Heating system symbol

Heating in progress.

Description of current display parameter

Information symbols

1.0 Menu number
Key lock activated.

Plus button

- Scroll forward in the menu system.
- Increase the value of the selected parameter

See the section "Control – General"

Minus button

- Scroll back in the menu system.
- Reduce the value of the selected parameter

See the section "Control – General"

Enter button

- Entering lower layer in the menu system.
- Parameter change activated
- Parameter change confirmed

See the section "Control – General"

Status lamp

During normal operation, the status lamp lights green. In the event of an alarm, it lights red.

How to use the front panel

All the most common settings are made from the panel such as comfort etc. that you require the heat pump system to fulfil.

In order to make full use of it, certain basic settings must have been made (see page 45) and the installation in general is carried out according to the instructions.

Menu 1.0 (the temperature in the water heater) is normally shown on the display.

The plus and minus buttons and the enter button are used to scroll through the menu system as well as to change the set value in some menus.

Menu types (Menu 8.1.1)

Control is classified into different menu types depending on how “deep” into the controls you need to go.

- Normal [N]: The settings you as a customer often need.
- Extended [U]: Shows all detailed menus except the service menus.
- Service [S]: Shows all menus.

Changing of menu type is done from Menu 8.1.1

Quick movement

To quickly return to the main menu from a sub menu, press the following button:

Key lock

A key lock can be activated in the main menus by simultaneously pressing the and the buttons. The key symbol will then be shown on the display.

The same procedure is used to deactivate the key lock.

Language setting (Menu 8.1.2)

Language used in the display can be chosen in Menu 8.1.2.

Comfort setting heating

General

The indoor temperature depends on several factors.

- Sunlight and heat emissions from people and household machines are normally sufficient to keep the house warm during the warmer parts of the year.
- When it gets colder outside, the heating system must be started. The colder it is outside, the warmer radiators and under floor heating systems must be.

Controlling heat production

Normally, the heat pump heats the water (heating medium) to the temperature required at a certain outdoor temperature. This occurs automatically on the basis of the collected temperature values from the outdoor sensor and sensors on the lines to the radiators (Supply water sensors). Extra accessories such as room sensors, can influence the temperature.

In order to operate the system properly, the correct settings must be made on the heat pump first, see the section “Default Heating curve setting”.

The outdoor sensor (mounted on an exterior wall of the house) senses variations in the outdoor temperature early on, sends the information to the heat pump control computer and heating operation is started. It does not have to be cold inside the house before the control system is activated. As soon as the temperature drops outside, the temperature of the water to the radiators (supply temp.) inside the house is increased automatically.

The heat pumps flow temperature (Menu 2.0) will hover around the theoretical required value, which is in brackets on the display.

Temperature of the heating system

The temperature of the heating system in relation to the outdoor temperature can be determined by you by selecting a heat curve and by using the “Offset heating curve” knob on the heat pump’s front panel.

Operating status

The “Operating mode” button is used to set the required operating mode.

The change does not need to be confirmed with the enter button.

The current operating mode is shown on the front panel display when the button is pressed and the mode changes when you continue to press the button.

The display returns to the normal display mode once the enter button is pressed.

The electric heater is only used for anti-freeze if it is deactivated in the menu system for all operating modes.

There are different operating modes to choose:

1. “Auto”

   Indoor unit automatically selects the operating mode by taking the outdoor temperature into account. This means that the operating mode switches between “Heating” and “Hot water”.

   The circulation pump is permitted to operate when there is a need.
2. “AutoC”*

   Indoor unit selects operating mode automatically (cooling can also be selected now) by the outdoor temperature. This means that the operating mode switches between “Heating”, “Cooling” and “Hot water”.

   The circulation pump is permitted to operate when there is a need.
3. Heating

   Only heating and hot water mode.

   The circulation pump is in operation the entire time. Electirc heater is energized if necessary.
4. Cooling*

   Heat pump is used for cooling only if electric heater use is allowed. Otherwise, it is used for both cooling and hot water.

   The circulation pump is in operation the entire time.
5. Hot water

   Only hot water is produced.

   Only the compressor is operational.
6. Add. Heat only

   Heat pump is not operational. The function is activated/deactivated by pressing in the “operating mode button” for 7 seconds.

* To use the cooling functions, the system must be designed to withstand low temperatures and cooling must be activated in Menu 9.3.3.

Changing the room temperature manually

If you want to temporarily or permanently increase or lower the indoor temperature, turn the “Offset heating curve” knob clockwise to increase or anticlockwise to lower. One line approximately represents 1 degree change in room temperature.

NOTE

An increase in the room temperature may be inhibited by the radiator or underfloor heating thermostats, if so these must be set at 0.

Default Heating curve setting

The basic heating is set using Menu 2.1.2 and with the "Heating curve offset" knob.

If the room temperature does not reach the target, readjustment may be necessary.

If you do not know the correct settings, use the basic data from the automatic heating control system diagram on the right.

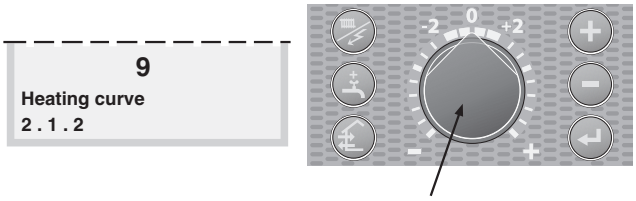

Menu 2.1.2 Heating curve Offset heating curve

* Heating curve offset for system 2 can be made in Menu 3.1

NOTE

Wait one day between settings so as to stabilise the temperatures.

Setting with diagrams

The diagram shows the relation between the outdoor air temperature in the area and the target supply water temperature of the heating system. This is set under Menu 2.1.2, "Heating curve". Limitations, which are not in the diagrams, can be set in the control system's permitted min and max temperatures. (See Menu 2.1.4 and 2.3 as well as 3.3 and 3.4)

Heating curve offset -2

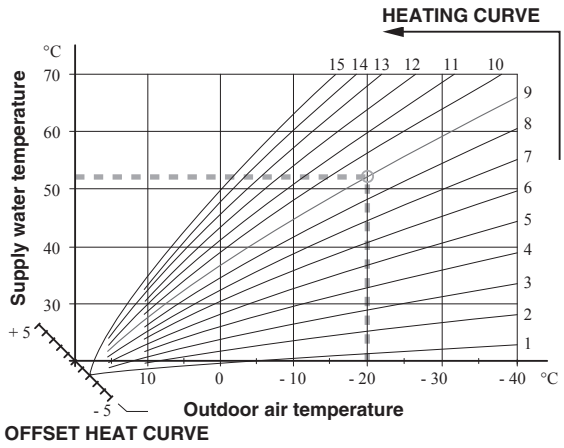

Heating curve offset 0

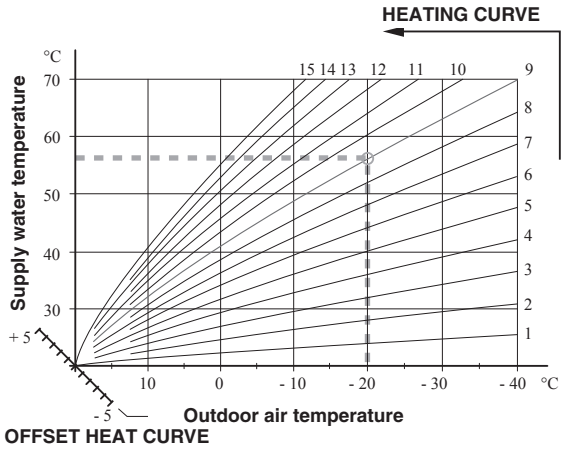

Heating curve offset +2

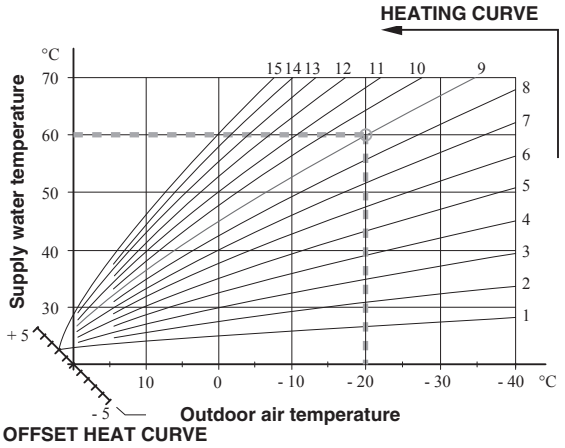

Readjusting the default settings

If the required room temperature is not obtained, readjustment may be necessary.

Cold weather conditions

- When the room temperature is too low, the “Heating curve” value is increased in Menu 2.1.2 by one increment.
- When the room temperature is too high, the “Heating curve” value is decreased in Menu 2.1.2 by one increment.

Warm weather conditions

- If the room temperature is low, increase the “Heating curve offset” setting by one step clockwise.
- If the room temperature is high, reduce the “Heating curve offset” setting by one step anti-clockwise.

Heating system 2

If the heating system has two different type of emitter like radiator and under floor heating, it is possible to set two different calculated supply temperature. System 1 for higher supply temperature can be set in Menu 2.1.0, and system 2 for lower supply temperature can be set in Menu 3.0.

Vacation set back

When you are away from home for a long time, it is possible to set the target supply water temperature for heating lower than usual to save energy consumption. Also, it is possible to cancel hot water operation during the period.

For details, see Menu 7.5.0 Vacation set back.

Comfort setting with room sensor

If MH-RG10 is installed, operation mode is chosen not only by outdoor air temperature but also by room air temperature.

Upper limit of the outdoor air temperature to operate in Heating mode can be set in Menu 8.2.3 Stop temp Heating.

Lower limit of the outdoor air temperature to operate in Cooling mode can be set in Menu 8.2.4 Start temp Cooling.

Target room air temperature can be adjusted by turning the knob on MH-RG10, and it is displayed in Menu 6.3.

For details, see instruction manual for MH-RG10. The below figure shows an example of mode transition.

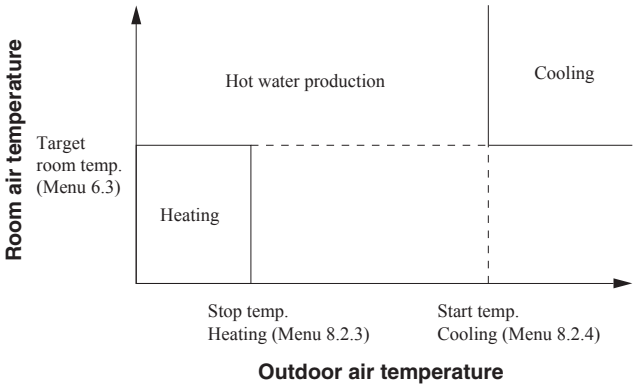

Mode transition (in case AutoC is chosen)

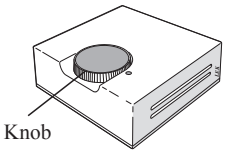

MH-RG10

Comfort setting cooling

General

In the default setting, cooling operation is not allowed. In order to activate, change the setting on the Menu 9.3.3 Cooling system to “On”.

NOTE

The climate system must manage cooling operation. Setting must be made by installer when commissioning the system.

Settings must be made by the installer when commissioning the system.

If a room sensor is connected, it starts and stops cooling based on both the room and the outdoor temperature. The lowest calculated supply water temperature is set in Menu 2.2.4.

Cooling operated from the outdoor sensor in operating mode AutoC

If the cooling system is set to “On” in Menu 9.3.3 and the outdoor air temperature is greater or equivalent to the set start temperature for cooling in Menu 8.2.4, cooling starts.

Cooling stops when the outdoor air temperature drops below the set value minus the set value in Menu 8.2.5.

The calculated supply water temperature is determined from the selected cooling curve in Menu 2.2.2 and the offset for cooling curve, Menu 2.2.1. Limitations, which are not in the diagram, are included in the control system’s permitted min temperature.

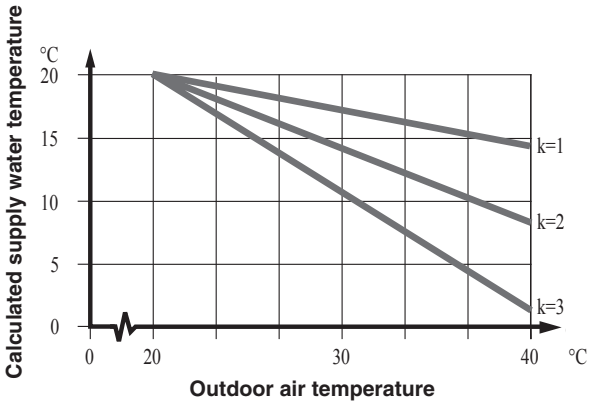

Comfort setting hot water

The integrated water heater is a coil model and is heated by circulating water, which is heated by the heat pump.

During “normal” consumption it is enough to run the heat pump to supply the different tapping points of the house with hot water. The temperature of the hot water in the water heater then varies between the set values.

Under section 1.0 [N] Hot water temp. on page 93 there is a complete description of menu settings for hot water temperatures.

Available volume

<HMA100V, HMA100VM>

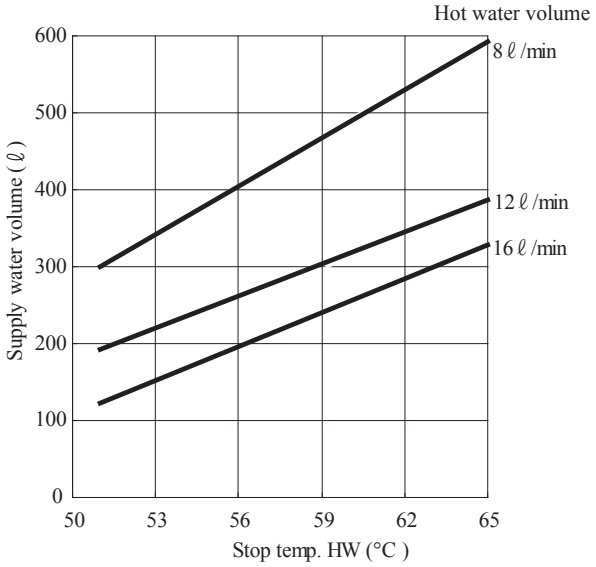

<HMS140V>
MT300

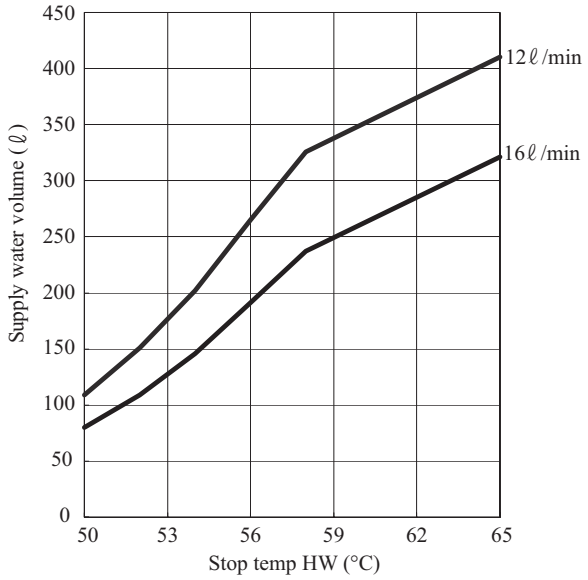

Hot water Supply is unlimited in case 8 ℓ /min at the condition as the capacity is bigger than hot water supply.

MT500

TBD

∗This graph is based on the following conditions :
Inlet water temperature : 15°C
Outlet water temperature : 40°C
Outdoor air temperature : 7°C

Prioritizing

When the water temperature in the tank drops, heat pump operation shifts to hot water production. In case there is demand for both hot water and heating/cooling for long time, operation mode is periodically switched between hot water and heating/cooling. For details, see Menu 1.0 Hot water temp and Menu 8.5.0 Period settings.

Extra Hot Water

In all “Extra hot water” functions, the temperature of the hot water increases temporarily. The temperature is first increased to an adjustable level by the compressor (Menu 1.5) and then the electric heater is energized until the water temperature reaches the stop temperature (Menu 1.4).

Temporary “Extra hot water” is activated manually, whilst time based extra hot water is activated using the settings made in the control computer.

When:

- “A” appears above the icon, temporary extra hot water is active.
- “B” appears above the icon, time based extra hot water is active.

NOTE

“Extra hot water” usually means that the electric heater is activated regardless of Allow add heat setting (menu 8.2.1) and therefore increases the electrical consumption.

“Extra hot water” can be activated in three different ways:

1. **Periodic time based extra hot water**

   Interval between extra hot water operation is selected in Menu 1.7. Menu 1.8 shows when the next extra hot water operation is due.

   The increased temperature is maintained by the electric heater for one hour..

2. **Schedule time based extra hot water**

   The start and stop times for the day of the week when the extra hot water operation is required are set in the sub menus to Menu 7.4.0.

   The increased temperature is maintained by the electric heater for the selected period.

3. **Temporary extra hot water**

   Extra hot water operation starts when Extra hot water button is pressed, and it is kept for 3 hours. The operation is cancelled when the button is pressed again during the period.
   The increased temperature is maintained by the electric heater until the period of time has expired.

Maintenance

Indoor unit and outdoor unit require minimal maintenance after commissioning.

Hydrolution contains many components and is why monitoring functions are integrated to help you.

If something abnormal occurs, a message appears about malfunctions in the form of different “alarm” texts in display.

Checking the safety valves in indoor unit

Indoor unit has been equipped with a safety valve for the water heater as well as a safety valve for the climate system by the installer.

The climate system’s safety valve

<HMA100V, HMA100VM>

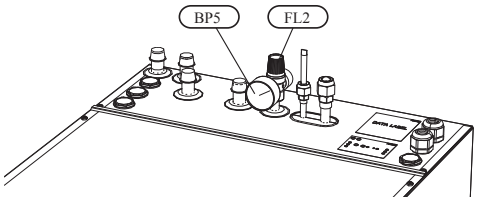

<HMS140V>

MT300

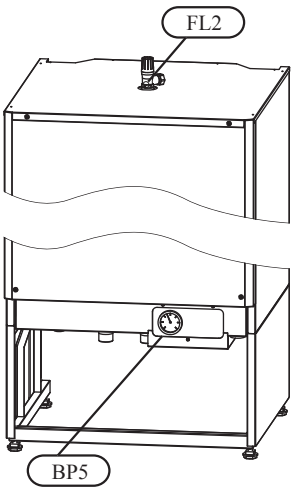

MT500

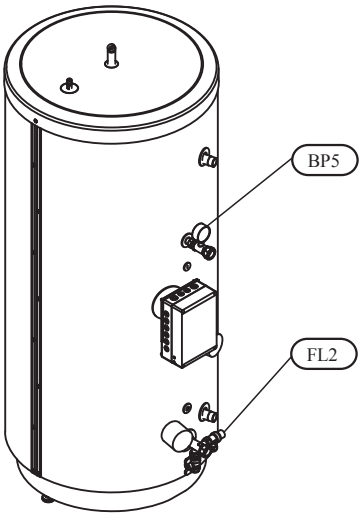

The climate system’s safety valve (FL2) must be completely sealed. Checks must be carried out regularly as follows:

- Open the valve.
- Check that water flows through the valve. If this does not happen, replace the safety valve.
- Close the valve again.
- The heating system may need to be refilled after checking the safety valve, see the section “Filling the heating system”.

Hot water heater safety valve

The water heater’s safety valve sometimes releases a little water after hot water usage. This is because the cold water, which enters the heater to replace the hot water, expands when heated causing the pressure to rise and the safety valve to open.

Also check the water heater safety valve regularly. The appearance and location of the safety valve differs between different installations. Contact your installer for information.

Pressure gauge in indoor unit*

The working range of the heating system is normally 0.5 – 1.5 bar when the system is closed. Check this on the pressure gauge (BP5).

* HMS140V is not eguipped with safety valve nor pressure gauge. They are on tank. For details, see page 213.

Emptying the hot water heater

The water heater is of the coil type and is drained using the siphon principle. This can be done either via the drain valve on the incoming cold water pipe or by inserting a hose into the cold water connection.

Emptying the vessel

Contact your installer if the vessel in indoor unit needs emptying.

Maintenance of outdoor unit

Outdoor unit is equipped with control and monitoring equipment, however some exterior maintenance is still necessary.

Make regular checks throughout the year that the inlet grille is not clogged by leaves, snow or anything else. During the cold months of the year, check to make sure that there isn't a build up of ice or frost under outdoor unit. Strong wind combined with heavy snowfall can block the intake and exhaust air grilles. Make sure that there is no snow on the grilles.

Also check that the condensation water drain under outdoor unit is not blocked.

If necessary the outer casing can be cleaned using a damp cloth. Care must be exercised so that the heat pump is not scratched when cleaning. Avoid spraying water into the grilles or the sides so that water penetrates into outdoor unit. Prevent outdoor unit coming into contact with alkaline cleaning agents.

⚠WARNING!

Rotating fan.

Saving tips

Your Hydrolution produces heat and hot water according to your needs. It also attempts to carry out all requirements with all available "aids" from the control settings made.

The indoor temperature is naturally affected by the energy consumption. Therefore, take care not to set a temperature higher than necessary.

Other known factors that affect the energy consumption are, for example, hot water consumption and the insulation level of the house, as well as the level of comfort you require.

Also remember:

- Open the thermostat valves completely (except in the rooms that are to be kept cooler for various reasons, e.g. bedrooms).

Thermostat valves in the radiators and floor loops can negatively affect the energy consumption. They slow the flow in the heating system, which the heat pump wants to compensate with increased temperatures. It then works harder and consumes more electrical energy.

Dealing with comfort disruption

Use the following list to find and remedy any heating or hot water problems.

Symptom	Cause	Action
Low hot water temperature or a lack of hot water	Circuit or main MCB tripped.	Check and replace blown fuses.
	Heat pump and immersion heater do not heat.	Check and replace any blown circuit and main fuses.
	Possible earth circuit-breaker tripped.	Reset the earth circuit-breaker, if the earth circuit-breaker trips repeatedly, call an electrician.
	Switch (SF1) set to mode 0.	Set the switch to 1.
	Large hot water demand.	Wait a few hours and check if the hot water temperature rises.
	Too low start temperature setting on the control system.	Adjust the start temperature setting in menu 1.2.
Low room temperature.	Possible earth circuit-breaker tripped.	Reset the earth circuit-breaker, if the earth circuit-breaker trips repeatedly, call an electrician.
	Heat pump and immersion heater do not heat.	Check and replace any blown circuit and main fuses.
	Incorrect setting of "Heating curve, offset" and/or "Cooling curve, offset".	Adjust the settings. Check Menu 2.1.1, 2.1.2 for heating system 1 3.1, 3.2 for heating system 2 2.1.1, 2.2.2 for cooling system
	Stop temp heating setting is too low.	Adjust the setting. Check Menu 8.2.3
	Circuit or main MCB tripped.	Check and replace blown fuses.
	Heat pump in incorrect operating mode "Hot water" or "Cooling".	Change operating mode to "Auto" or " AutoC" .
	The current limiter has restricted the current because many power consumers are being used in the property.	Switch off one/several of the power consumers.
High room temperature.	Incorrect setting of "Heating curve, offset" and/or "Cooling curve, offset".	Adjust the settings. Check Menu 2.1.1, 2.1.2 for heating system 1 3.1, 3.2 for heating system 2 2.1.1, 2.2.2 for cooling system
	Heat pump in incorrect operating mode.	Change operating mode to "AutoC".
	Start temp cooling setting is too high.	Adjust the setting. Check Menu 8.2.4.
	Heat load is too high.	Remove the excess heat load.
The compressor does not start.	Minimum time between compressor starts alternatively time after power switch on not being achieved.	Wait 30 minutes and check if the compressor starts.
	Alarm tripped.	See section "Alarms".
	Alarm cannot be reset.	Activate operating mode "Add. heat only".
Panel gone out.		Check and replace any blown circuit andmain fuses.
		Check that the circuit breaker to the indoor unit is not off.
		Set switch (SF1) to standby " ".

The phenomena mentioned below are not malfunction.

The air conditioning system sounds as if water is draining from it.	Sounds of rustling or gurgling may be heard when the operation is started, when the compressor is activated/deactivated during operation, or when the operation is stopped. These are the sounds of the refrigerant flowing through the system.
Sounds of rustling or gurgling may be heard from a stopped indoor unit.	These sounds can be heard when the air conditioning system is performing automatic control.
The air conditioning system cannot start operating again immediately after stopping.	Outdoor unit doesn't restart during the first 3 minutes after stopping operation. This is because a circuit for protecting the compressor is activated (the fan is operating during this period).
The outdoor unit discharges water or steam during heating operation.	Water or steam is discharge during defrosting operation which removes frost built up on the surface of the heat exchanger in the outdoor unit in heating mode.
The outdoor unit fan is not running even when the system is in operation.	The fan speed is automatically controlled according to the outdoor air temperature. It may be stopped in high outdoor air temperature in case of heating, and in low outdoor air temperature in case of cooling. Also, the fan is stopped during defrosting operation. REQUESTS **The fan will suddenly begin to operate even if it is stopped. Do not insert finger and/or stick.**
Hissing sounds are heard when the operation is stopped or during defrost operation.	These sounds are generated when the refrigerant valve inside the air conditioning system is activated.

Operating mode "Add. heat only"

In the event of malfunctions that cause a low indoor temperature, you can normally activate "Add. heat only" in indoor unit, which means that heating only occurs with the immersion heater.

Activate the mode by holding in the operating mode button for 7 seconds.

Note that this is only a temporary solution, as heating with the immersion heater does not make any savings.

Emergency mode

Emergency mode is activated by setting the switch to "⚠". It is used when the control system and thereby operating mode "Add. heat only" do not function as they should. Emergency mode is activated by setting switch (SF1) to "⚠".

The following applies in emergency mode:

- The front panel is not lit and the control computer in indoor unit is not connected.
- Outdoor unit is off and only the circulation pump and immersion heater in indoor unit are active.
- An electrical step of 4 kW is connected. The immersion heater is controlled by a separate thermostat (BT30).
- The automatic heating control system is not operational, so manual shunt operation is required. Call installer.

Alarm indications

There are many monitoring functions integrated in Hydrolution To alert you to any malfunctions, the control computer transmits alarm signals that can be read from the front panel display.

What happens in the event of an alarm?

- The background lighting in the display starts flashing and the status lamp lights red.
- Some alarms change operating mode to “Add. heat only.” and reduce the supply temperature to the minimum permitted temperature to notify you that something is wrong.

Different types of alarms

- Alarms with automatic reset (do not need to be acknowledged when the cause has disappeared).
- Existing alarms that require corrective action by you or the installer.
- A complete list of alarms is on page 146.

Recommended actions

1. Read off which alarm has occurred from the heat pump’s display.
2. As a customer you can rectify certain alarms. See the table below for relevant actions. If the alarm is not rectified, or is not included in the table, contact your installer.

Alarm text on the display	Alarm description	Check/remedy before installers/service technicians are called
LP-ALARM	Tripped low pressure sensor.	Check that the thermostats for the radiators/ under-floor systems are not closed.
HP-ALARM	Tripped high pressure sensor.	Check that the thermostats for the radiators/ under-floor systems are not closed.
OU power failure / OU Com. error	Outdoor unit not powered / Communication cut	Check that any circuit breakers to the outdoor unit are not off.
Display not lit		Check and replace any blown circuit and main fuses.
		Check that the circuit breakers to the indoor unit are not off.
		Check that the switch (SF1) is in normal position (1).

Resetting alarms

No harm in Resetting an alarm. If the cause of the alarm remains, the alarm recurs.

- When an alarm has been triggered, it can be reset by switching indoor unit off and on using the switch (SF1).
- When the alarm cannot be reset using the switch (SF1), the operating mode, “Add. heat only”, can be activated to resume a normal temperature level in the house. This is most easily carried out by holding the “Operating mode” button in for 7 seconds.

NOTE

Recurring alarms mean that there is a fault in the installation.

Contact your installer!

Installation

Outdoor unit installation

PSB012D955D G

◎This installation manual deals with outdoor units and general installation specifications only. For indoor units, refer to the respective installation manuals supplied with the units.
◎Read this manual carefully before you set to installation work and carry it out according to the instructions contained in this manual.

Check before installation work

[Accessory]

Edging		1 piece	knock-out hole protection (100VNX, 140VNX only)

- Model name and power source
- Refrigerant piping length
- Piping, wiring and miscellaneous small parts
- Indoor unit installation manual

1. HAULAGE AND INSTALLATION (Take particular care in carrying in or moving the unit, and always perform such an operation with two or more persons.)

⚠CAUTION When a unit is hoisted with slings for haulage, take into consideration the offset of its gravity center position. If not properly balanced, the unit can be thrown off-balance and fall.

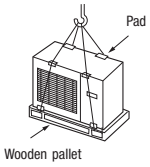

1) Delivery

- Deliver the unit as close as possible to the installation site before removing it from the packaging.
- When some compelling reason necessitates the unpacking of the unit before it is carried in, use nylon slings or protective wood pieces so as not to damage the unit by ropes lifting it.

2) Portage

- The right hand side of the unit as viewed from the front (diffuser side) is heavier. A person carrying the right hand side must take heed of this fact. A person carrying the left hand side must hold with his right hand the handle provided on the front panel of the unit and with his left hand the corner column section.

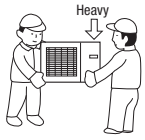

3) Selection of installation location for the outdoor unit

Be sure to select a suitable installation place in consideration of following conditions.

○ A place where it is horizontal, stable and can endure the unit weight and will not allow vibration transmittance of the unit.
○ A place where it can be free from possibility of bothering neighbors due to noise or exhaust air from the unit
○ A place where the unit is not exposed to oil splashes.
○ A place where it can be free from danger of flammable gas leakage.
○ A place where drain water can be disposed without any trouble.
○ A place where the unit will not be affected by heat radiation from other heat source.
○ A place where snow will not accumulate.
○ A place where the unit can be kept away 5m or more from TV set and/or radio receiver in order to avoid any radio or TV interference.
○ A place where good air circulation can be secured, and enough service space can be secured for maintenance and service of the unit safely.
○ A place where the unit will not be affected by electromagnetic waves and/or high-harmonic waves generated by other equipment.
○ A place where chemical substances like sulfuric gas, chloric gas, acid and alkali (including ammonia), which can harm the unit, will not be generated and not remain.
○ A place where strong wind will not blow against the outlet air blow of the unit.

4) Caution about selection of installation location

(1) If the unit is installed in the area where the snow will accumulate, following measures are required.
The bottom plate of unit and intake, outlet may be blocked by snow.

1.Install the unit on the base so that the bottom is higher than snow cover surface.

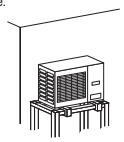

2.Provide a snow hood to the outdoor unit on site.
Regarding outline of a snow hood, refer to our technical manual.

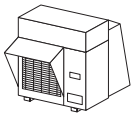

3.Install the unit under eaves or provide the roof on site.

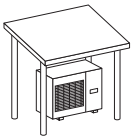

Since drain water generated by defrost control may freeze, following measures are required.
- Don't execute drain piping work. by using a drain elbow and drain grommets (optional parts). [Refer to Drain piping work.]
- Recommend setting Defrost Control (SW3-1) and Snow Guard Fan Control (SW3-2). [Refer to Setting SW3-1, SW3-2.]

(2) If the unit can be affected by strong wind, following measures are required.
Strong wind can cause damage of fan (fan motor), or can cause performance degradation, or can trigger anomalous stop of the unit due to rising of high pressure.

1.Install the outlet air blow side of the unit to face a wall of building, or provide a fence or a windbreak screen.

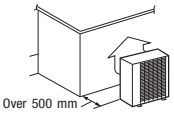

2.Install the outlet air blow side of the unit in a position perpendicular to the direction of wind.

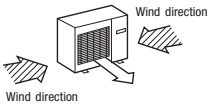

3.The unit should be installed on the stable and level foundation. If the foundation is not level, tie down the unit with wires.

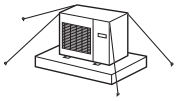

4.Use wind guard in case outdoor unit is installed where ambient temperature drops below -10℃ and natural wind blows into outdoor unit directiy.
For detail see page 220.

5) Installation space

- Walls surrounding the unit in the four sides are not acceptable.
- There must be a 1-meter or larger space in the above.
- Where a danger of short-circuiting exists, install guide louvers.
- When more than one unit are installed, provide sufficient intake space consciously so that short-circuiting may not occur.
- Where piling snow can bury the outdoor unit, provide proper snow guards.
- A barrier wall placed in front of the exhaust diffuser must not be higher than the unit.

(mm)

Size \ Example installation	71VNX			100VNX, 140VNX		
	I	II	III	I	II	III
L1	Open	Open	500	Open	Open	500
L2	300	250	Open	300	5	Open
L3	100	150	100	150	300	150
L4	250	250	250	5	5	5

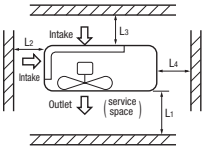

6) Installation

- In installing the unit, fix the unit's legs with bolts specified on the left.
- The protrusion of an anchor bolt on the front side must be kept within 15 mm.
- Securely install the unit so that it does not fall over during earthquakes or strong winds, etc.
- Refer to the left illustrations for information regarding concrete foundations.
- Install the unit in a level area. (With a gradient of 5 mm or less.)
  Improper installation can result in a compressor failure, broken piping within the unit and abnormal noise generation.

① Anchor bolt fixed position

71VNX

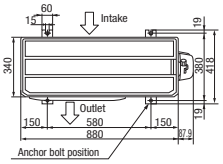

100VNX, 140VNX

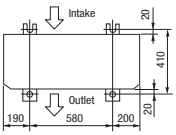

② Notabilia for installation

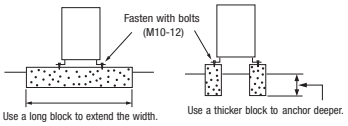

2. REFRIGERANT PIPING WORK

1) Restrictions on unit installation and use

- Check the following points in light of the indoor unit specifications and the installation site.
- Observe the following restrictions on unit installation and use. Improper installation can result in a compressor failure or performance degradation.

Restrictions		Dimensional restrictions			Marks appearing in the drawing on the right
		71VNX	100VNX	140VNX	Single type
One-way pipe length of refrigerant piping		30m or less	12m or less	30m or less	L
Elevation difference between indoor and outdoor units	When the outdoor unit is positioned higher,	7m or less			H
	When the outdoor unit is positioned lower,	7m or less			H

< Single type >

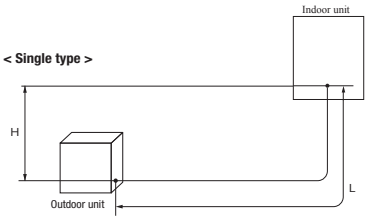

2) Determination of pipe size

- Determine refrigerant pipe size pursuant to the following guidelines based on the indoor unit specifications.

	71VNX, 100VNX, 140VNX	
	Gas pipe	Liquid pipe
Outdoor unit connected	ϕ15.88 Flare	ϕ9.52 Flare
Refrigerant piping	ϕ15.88	ϕ9.52
Indoor unit connected	ϕ15.88	ϕ9.52
Connected indoor unit model	HMA100V-270 (71VNX, 100VNX), HMS140V (140VNX)	

3) Refrigerant pipe wall thickness and material

- Select refrigerant pipes of the table shown on the right wall thickness and material as specified for each pipe size.

Pipe diameter [mm]	9.52	15.88
Minimum pipe wall thickness [mm]	0.8	1.0
Pipe material*	O-type pipe	O-type pipe

NOTE

- Select pipes having a wall thickness larger than the specified minimum pipe thickness. (100VNX, 140VNX only)

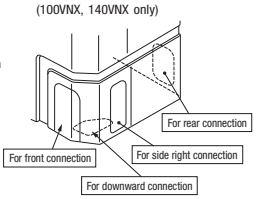

4) On-site piping work

⚠IMPORTANT

- Take care so that installed pipes may not touch components within a unit. If touching with an internal component, it will generate abnormal sounds and/or vibrations.

How to remove the service panel

First remove the screw (s) (× mark) of the service panel or the side cover and push it down into the direction of the arrow mark and then remove it by pulling it toward you.

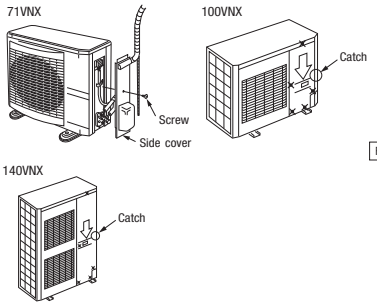

- The pipe can be laid in any of the following directions: side right, front, rear and downward. (100VNX, 140VNX)
- Remove a knock-out plate provided on the pipe penetration to open a minimum necessary area and attach an edging material supplied as an accessory by cutting it to an appropriate length before laying a pipe. (100VNX, 140VNX)
- Carry out the on site piping work with the operation valve fully closed.
- Give sufficient protection to a pipe end (compressed and blazed, or with an adhesive tape) so that water or foreign matters may not enter the piping.
- Bend a pipe to a radius as large as practical.(R100～R150) Do not bend a pipe repeatedly to correct its form.
- Flare connection is used between the unit and refrigerant pipe. Flare a pipe after engaging a flare nut onto it. Flare dimensions for R410A are different from those for conventional R407C. Although we recommend the use of flaring tools designed specifically for R410A, conventional flaring tools can also be used by adjusting the measurement of protrusion B with a protrusion control gauge.

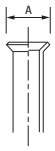

Flared pipe end: A (mm)

Copper pipe outer diameter	A $^{0}_{-0.4}$
ϕ6.35	9.1
ϕ9.52	13.2
ϕ12.7	16.6
ϕ15.88	19.7

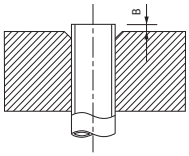

Copper pipe protrusion for flaring: B (mm)

Copper pipe outer diameter	In the case of a rigid (clutch) type	
	With an R410A tool	With a conventional tool
ϕ6.35	0～0.5	0.7～1.3
ϕ9.52		
ϕ12.7		
ϕ15.88		

- Tighten a flare joint securely with a double spanner.

⚠ CAUTION **Do not apply force beyond proper fastening torque in tightening the flare nut.**

Fix both liquid and gas service valves at the valve main bodies as illustrated on the right, and then fasten them, applying appropriate fastening torque.

Operation valve size (mm)	Tightening torque (N-m)	Tightening angle (°)	Recommended length of a tool handle (mm)
ϕ6.35 (1/4")	14～18	45～60	150
ϕ9.52 (3/8")	34～42	30～45	200
ϕ12.7 (1/2")	49～61	30～45	250
ϕ15.88 (5/8")	68～82	15～20	300

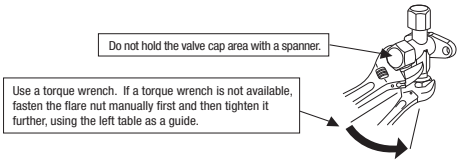

5) Air tightness test

① Although outdoor and indoor units themselves have been tested for air tightness at the factory, check the connecting pipes after the installation work for air tightness from the operation valve's check joint equipped on the outdoor unit side. While conducting a test, keep the operation valve shut all the time.
a) Raise the pressure to 0.5 MPa, and then stop. Leave it for five minutes to see if the pressure drops.
b) Then raise the pressure to 1.5 MPa, and stop. Leave it for five more minutes to see if the pressure drops.
c) Then raise the pressure to the specified level (4.15 MPa), and record the ambient temperature and the pressure.
d) If no pressure drop is observed with an installation pressurized to the specified level and left for about one day, it is acceptable. When the ambient Temperature fall 1℃, the pressure also fall approximately 0.01 MPa. The pressure, if changed, should be compensated for.
e) If a pressure drop is observed in checking e) and a) – d), a leak exists somewhere. Find a leak by applying bubble test liquid to welded parts and flare joints and repair it. After repair, conduct an air-tightness test again.
② In conducting an air-tightness test, use nitrogen gas and pressurize the system with nitrogen gas from the gas side. Do not use a medium other than nitrogen gas under any circumstances.

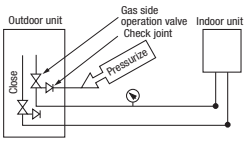

6) Evacuation

＜Work flow＞ When the system has remaining moisture inside or a leaky point, the vacuum gauge indicator will rise.
Check the system for a leaky point and then draw air to create a vacuum again.

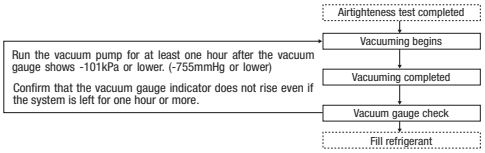

Pay attention to the following points in addition to the above for the R410A and compatible machines.

○To prevent a different oil from entering, assign dedicated tools, etc. to each refrigerant type. Under no circumstances must a gauge manifold and a charge hose in particular be shared with other refrigerant types (R22, R407C, etc.).
○Use a counterflow prevention adapter to prevent vacuum pump oil from entering the refrigerant system.

7) Additional refrigerant charge

(1) Calculate a required refrigerant charge volume from the following table.

	Additional charge volume (kg) per meter of refrigerant piping (liquid pipe ϕ6.35)	Refrigerant volume charged for shipment at the factory (kg)	Installation's pipe length (m) covered without additional refrigerant charge
71VNX	0.06	2.55	15
100VNX	—	2.9	15
140VNX	0.06	4.0	15

● This unit contains factory charged refrigerant covering 15m of refrigerant piping and additional refrigerant charge on the installation site is not required for an installation with up to 15m refrigerant piping. When refrigerant piping exceeds 15m, additionally charge an amount calculated from the pipe length and the above table for the portion in excess of 15m.

Formula to calculate the volume of additional refrigerant required

Additional charge volume (kg) = { Main pipe length (m) – Length covered without additional charge 15 (m) } x 0.06 (kg/m)

*When an additional charge volume calculation result is negative, it is not necessary to charge refrigerant additionally.

● **To charge refrigerant again to the system, recover refrigerant from the system first and then charge the same volume as initial charge.**

(2) Charging refrigerant

● Since R410A refrigerant must be charged in the liquid phase, you should charge it, keeping the container cylinder upside down or using a refrigerant cylinder equipped with a siphon tube.
● Charge refrigerant always from the liquid side service port with the operation valve shut. When you find it difficult to charge a required amount, fully open the outdoor unit valves on both liquid and gas sides and charge refrigerant from the gas (suction) side service port, while running the unit in the cooling mode. In doing so, care must be taken so that refrigerant may be discharged from the cylinder in the liquid phase all the time. When the cylinder valve is throttled down or a dedicated conversion tool to change liquid-phase refrigerant into mist is used to protect the compressor, however, adjust charge conditions so that refrigerant will gasify upon entering the unit.
● In charging refrigerant, always charge a calculated volume by using a scale to measure the charge volume.
● When refrigerant is charged with the unit being run, complete a charge operation within 30 minutes. Running the unit with an insufficient quantity of refrigerant for a long time can cause a compressor failure.

NOTE ● Write down the addifional and total refrigerant volume on the label in front.

8) Insulation on piping

(1) Dress refrigerant pipes (both gas and liquid pipes) for heat insulation and prevention of dew condensation.
(2) Use a heat insulating material that can withstand 120℃ or a higher temperature. Poor heat insulating capacity can cause heat insulation problems or cable deterioration.
- Improper heat insulation/anti-dew dressing can result in a water leak or dripping causing damage to household effects, etc.
- All gas pipes must be securely heat insulated in order to prevent damage from dripping water that comes from the condensation formed on them during a cooling operation or personal injury from burns because their surface can reach quite a high temperature due to discharged gas flowing inside during a heating operation.
- Wrap indoor units' flare joints with heat insulating parts (pipe cover) for heat insulation (both gas and liquid pipes).
- Give heat insulation to both gas and liquid side pipes. Bundle a heat insulating material and a pipe tightly together so that no gaps may be left between them and wrap them together with a connecting cable by a dressing tape.
- **Both gas and liquid pipes need to be dressed with 20 mm or thicker heat insulation materials above the ceiling where relative humidity exceeds 70%.**

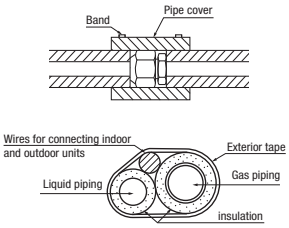

3. DRAIN PIPING WORK

● Execute drain piping by using a drain elbow and drain grommets supplied separately as optional parts, where water drained from the outdoor unit is a problem.

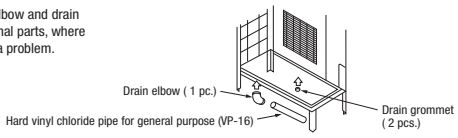

○ There are 3 drain holes provided on the bottom plate of an outdoor unit to discharge condensed water.
○ When condensed water needs to be led to a drain, etc., install the unit on a flat base (supplied separately as an optional part) or concrete blocks.
○ Connect a drain elbow as shown in the illustration and close the other two drain holes with grommets.
○ Do not use the base heater for icing prevention if drain piping is done. Drain piping may be damaged or burnt in worst case if the heater is used.

4. ELECTRICAL WIRING WORK For details of electrical cabling, refer to the indoor unit installation manual.

Electrical installation work must be performed by an electrical installation service provider qualified by a power provider of the country.
Electrical installation work must be executed according to the technical standards and other regulations applicable to electrical installations in the country.
•Ground the unit. Do not connect the grounding wire to a gas pipe, water pipe, lightning rod or telephone grounding wire. If impropery grounded, an electric shock or malfunction may result.
•A grounding wire must be connected before connecting the power cable. Provide a grounding wire longer than the power cable.
•Do not lay electronic control cables (remote control and signaling wires) and other cables together outside the unit. Laying them together can result in the malfunctioning or a failure of the unit due to electric noises.
•Fasten cables so that may not touch the piping, etc.
•When cables are connected, make sure that all electrical components within the electrical component box are free of loose connector coupling or terminal connection and then attach the cover securely. (Improper cover attachment can result in malfunctioning or a failure of the unit, if water penetrates into the box.)

● Connect a pair bearing a common terminal number with an indoor-outdoor connecting wire.
● In cabling, fasten cables securely so that no external force may work on terminal connections.
● Grounding terminals are provided in the control box.

71VNX

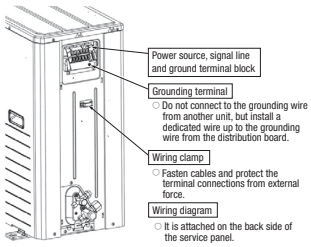

100VNX. 140VNX

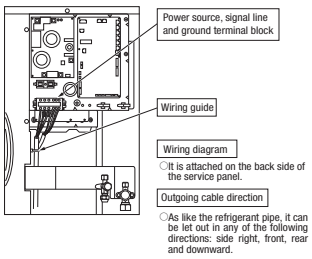

Power cable, indoor-outdoor connecting wires

● Always perform grounding system installation work with the power cord unplugged.

71VNX

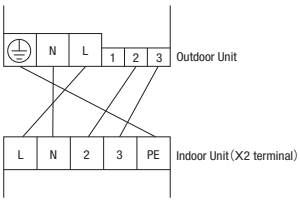

100VNX. 140VNX

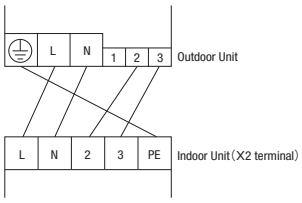

5. COMMISSIONING For details of commissioning, refer to the Indoor unit installation manual

⚠ WARNING

- Before conduct a test run, make sure that the operation valves are open.
- Turn on power 6 hours prior to a test run to energize the crank case heater.
  Do not turn on the power when the ambient temperature is below −20℃ to avoid breakdown of electronic component.
- In case of the first operation after turning on power, even if the unit does not operate for 30 minutes, it is not a breakdown.
- Always give a 3-minute or longer interval before you start the unit again whenever it is stopped.
- Removing the service panel will expose high-voltage live parts and high-temperature parts, which are quite dangerous.
  Take utmost care not to incur an electric shock or burns. Do not leave the unit with the service panel open.

A failure to observe these instructions can result in a compressor breakdown.

⚠ CAUTION

- When you operate switches (SW3) for on-site setting, be careful not to touch a live part.
- You cannot check discharge pressure from the liquid operation valve charge port.
- The 4-way valve (20S) is energized during a heating operation.
- When power supply is cut off to reset the unit, give 3 minutes or more before you turn on power again after power is cut off. If this procedure is not observed in turning on power again, "Communication error between outdoor and indoor unit" may occur.

Items to checkbefore a test run

- When you leave the outdoor unit with power supplied to it, be sure to close the panel.

Item No.used in the installation manual	Item	Check item	Check
2	Refrigerant plumbing	Were air-tightness test and vacuum extraction surely performed?	
		Are heat insulation materials installed on both liquid and gas pipes?	
		Are operation valves surely opened for both liquid and gas systems?	
4	Electric wiring	Is the unit free from cabling errors such as uncompleted connection, or reversed phase?	
		Doesn't cabling cross-connect between units, where more than one unit are installed?	
		Do indoor-outdoor connecting cables connect between the same terminal numbers?	
		Is the unit grounded with a dedicated grounding wire not connected to another unit's grounding wire?	
		Are cables free from loose screws at their connection points?	
		Are cables held down with cable clamps so that no external force works onto terminal connections?	

1) Test run method

Refer fo the indoor unit installation manual.

2) Checking the state of the unit in operation

Use check joints provided on the piping before and after the four-way valve installed inside the outdoor unit for checking discharge pressure and suction pressure.
As indicated in the table shown on the right, pressure detected at each point will vary depending on whether a cooling or heating operation has been selected.

	Check joint of the pipe	Charge port of the gas operation valve
Cooling operation	Discharge pressure (High pressure)	Suction pressure (Low pressure)
Heating operation	Suction pressure (Low pressure)	Discharge pressure (High pressure)

3) Setting SW3-1, SW3-2, on-site

(1) Defrost control switching (SW3-1)
- ·When this switch is turned ON, the unit will run in the defrost mode more frequently.
- ·Set this switch to ON, when installed in a region where outdoor temperature falls below zero during the season the unit is run for a heating operation.

(2) Snow guard fan control (SW3-2)
- ·When this switch is turned on, the outdoor unit fan will run for 10 seconds in every 10 minutes, when outdoor temperature falls to 3℃ or lower and the compressor is not running.
- ·When the unit is used in a very snowy country, set this switch to ON.

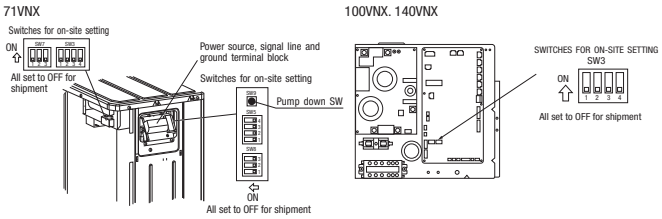

※ Do not operate SW3-3, SW5, SW8.

4) Failure diagnosis in a test run

Indoor Unit Display	Error Code in Error Log	Printed circuit board LED(The cycles of 5 seconds)		Failure event	Action
		Red LED	Green LED		
OU phase error	E34	Blinking once	Blinking continuously	Open phase	Check power cables for loose contact or disconnection
HP alarm	E40	Blinking once	Blinking continuously	63H1 actuation or operation with operation valves shut (occurs mainly during a heating operation)	1. Check whether the operation valves are open. 2. If an error has been canceled when 3 minutes have elapsed since a compressor stop, you can restart the unit by effecting Check Reset from the remote control unit.
LP alarm	E49	Blinking once	Blinking continuously	Low pressure error or operation with operation valves shut (occurs mainly during a cooling operation)	

- If an error code other than those listed above is indicated, refer to the wiring diagram of the outdoor unit and the indoor unit Installation manual.

5) The state of the electronic expansion valve.

The following table illustrates the steady states of the electronic expansion valve.

	When power is turned on	When the unit comes to a normal stop		When the unit comes to an abnormal stop	
		During a cooling operation	During a heating operation	During a cooling operation	During a heating operation
Valve for a cooling operation	Complete shut position	Complete shut position	Full open position	Full open position	Full open position
Valve for a heating operation	Full open position	Full open position	Complete shut position	Full open position	Full open position

6) Heed the following on the first operation after turning on the power supply.

This outdoor unit may start in the standby mode (waiting for a compressor startup), which can continue up to 30 minutes, to prevent the oil level in the compressor from lowering on the first operation after turning on the circuit breaker. If that is the case, do not suspect a unit failure.

Indoor unit installation

General information

Transport and storage

Indoor unit can be transported vertically and must be stored vertically and in dry conditions.

HMS140V can be transported and stored vertically or holizontally.

Supplied components

Outdoor sensor

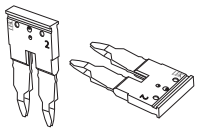

Straps for 1 phase connection

Current sensor, 3 phase

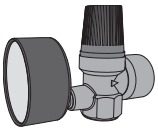

Safety valve with manometer (HMA100V(M) only)

The enclosed kit is located behind the front service cover in indoor unit.

Assembly

- It is recommended that indoor unit is installed in a room with existing floor drainage, most suitably in a utility room or boiler room.
- The surface must be firm, preferably a concrete floor or foundation. For wall mount unit, the surface must be firm, flat and vertical, preferably a concrete wall.
- Install indoor unit with its back to an outside wall, ideally in a room where noise does not matter. If this is not possible, avoid placing it against a wall behind a bedroom or other room where noise may be a problem.
- Floor standing indoor unit can be aligned using the adjustable feet.
- Route pipes so they are not fixed to an internal wall that backs on to a bedroom or living room.
- For HMA100V and HMA100VM, ensure that there is approx. 500 mm free space in front of and 220 mm above the product for any future service.
- For HMS140V ensure that there is approx. 1000 mm free space in front and 500 mm above and below the product for any future service.
- For HMS140V be sure to connect a tank on HW port even if HW application is not used.
- For HMS140V install tank unit and its pipings to indoor unit indoors in order to avoid icing.
- For HT30, MT300 and MT500, ensure that there is approx. 600 mm free space to pull out immersion heater for replacement.

Hanging indoor unit on a wall (HMS140V)

1. Ensure the final product position keeps the required clearance for installation and servicing.
2. Place the bracket attached onto the wall so that the hydrobox is not tilted and fix it with 3 deck screws on the wall.

   Choose appropriate size and material of screw according to the material of the wall so that the indoor unit would not fall down.

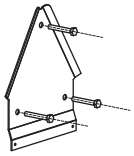

NOTE

Indoor unit weighs 60kg excluding water inside.

3. Hang indoor unit on bracket.

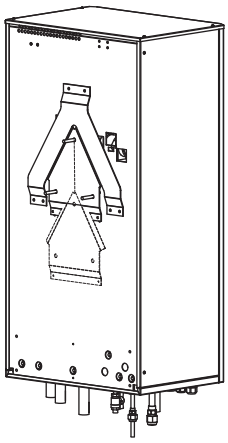

4. fix indoor unit on bracket with screws attached.

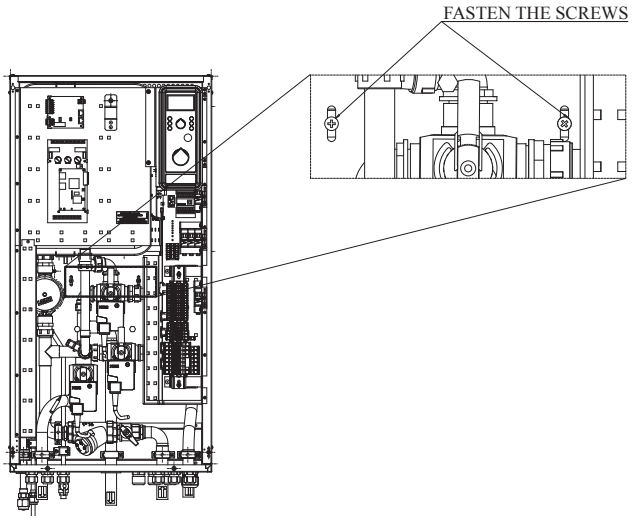

Dimensioning expansion vessel

Internal volume in HMA100V and HMA100VM for calculating expansion vessel is 280ℓ . The expansion vessel's volume must be at least 5 % of the total volume.

HMS140V has 18 ℓ of expansion vessel. which can cover the total system water volume mentioned in the below table.

Safety relief valve position	5 m higher than expansion vessel	0 m	5 m lower than expansion vessel
system water volume (ℓ)	390	330	240

If the system volume exceeds the limit, extra expansion vessel is necessary. Install it in the same level and same pre-pressure as the original one.

Alternatively, by reducing the water reserve* to 1ltr, it is possible to increase the system volume.

Safety relief valve position	5 m higher	0 m	5 m lower
system water volume (ℓ)	540	470	360

* water reserve: initial water volume in the expansion vessel when the system is filled with water

Initial pressure and max height difference

The initial pressure of the pressure expansion vessel must be dimensioned according to the maximum height (H) between the vessel and the highest positioned radiator, see figure. An initial pressure of 0.5 bar (5 mvp) means a maximum permitted height difference of 5 m.

If the standard initial pressure in the pressure vessel is not high enough it can be increased by filling via the valve in the expansion vessel. The expansion vessel's standard initial pressure must be entered in the check list on User's manual.

Any change in the initial pressure affects the ability of the expansion vessel to handle the expansion of the water.

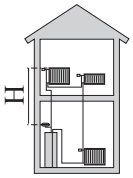

Manual shunting

When indoor unit is set to emergency mode ☞ on the main switch SF1, the heating control system is not in operation, and is why manual shunt operation is required.

1. Depress and lock the button on the valve.
2. Turn the mixing valve to the desired position by hand.

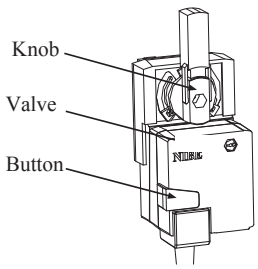

In the emergency mode, the valve position setting should be made as follows.

QM30 : Horizontal (Closed)

QM31 : Vertical (Open)

QN11 : Vertical (B→A)

<HMA100V, HMA100VM>

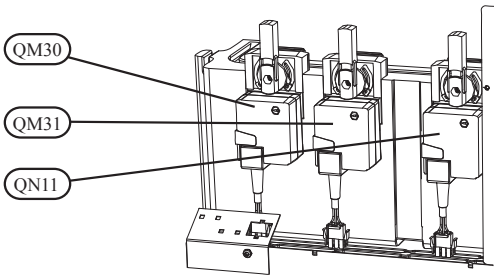

<HMS140V>

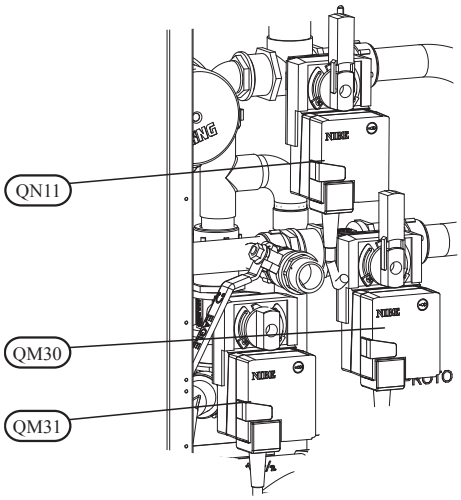

Emptying the vessel

The vessel in indoor unit is emptied by opening the valve (QM1) and safety valve (FL2).

NOTE

When the vessel in indoor unit is emptied via the valve (QM1), some water will remain in the coil and in the heat exchanger.

This means that there is a risk of the heat exchanger, pipes and valves freezing at low temperatures as well as a hygienic risk for the coil in the hot water section.

<HMA100V, HMA100VM>

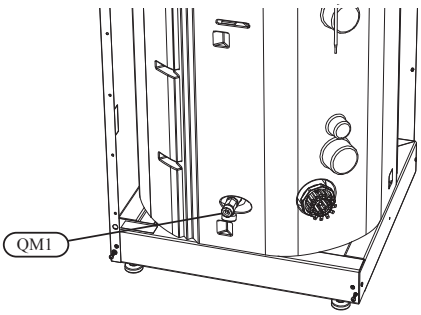

<HMS140V>

HT30

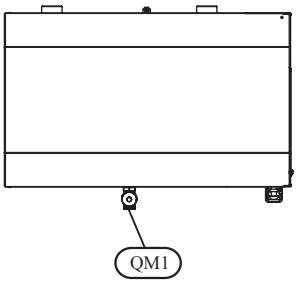

MT300

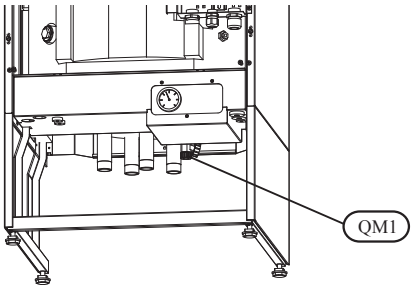

MT500

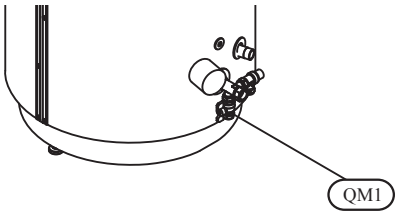

Recommended installation order

1 For wall mount type hang indoor unit on appropriate position and connect indoor unit and tank unit.
2. Connect indoor unit to the climate system, cold and hot water lines as well as any external heat sources. See page 63. Also see docking descriptions on page 66 and further on.
3. Install the refrigerant pipes according to the description on the Installation manual for outdoor unit.
4. Connect the current limiter, any centralised load control and external contacts as well as the cable between indoor unit and outdoor unit. Cable between indoor unit and tank should be connected for the system tank is speparated. See page 70.
5. Connect incoming electricity to indoor unit. See page 70.
6. Follow the commissioning instructions on page 76.

Pipe installation

General

Pipe installation must be carried out in accordance with current norms and directives. Indoor unit can operate with a return temperature of up to 65 °C and an outgoing temperature from the unit of 65 °C.

Indoor unit is not equipped with shut off valves; these must be installed outside the heat pump to facilitate any future servicing.

Indoor unit can be connected to the radiator system, floor heating system and/or fan convectors.

Install the supplied safety valve and manometer.

Overflow valve

NOTE

A free flow is required for all docking options, which means that an overflow valve must be installed.

The circulation pump may become damaged.

System requirements

The minimum water volume in the climate system is subject to the values in the table below.

In case the system has shuttle valve QN12 (see page 67), the piping before the valve must have the minimum required volume. Water volume on HT30, MT300 or MT500 cannot be counted on this calculation.

If it is not fulfilled, volume vessel must be installed.

For more options, see the docking description on page 66.

(liter)

	With underfloor cooling application	Without underfloor cooling application
HMA100V, HMA100VM FDCW71VNX	70	35
HMA100V, HMA100VM FDCW100VNX	100	50
HMS140V FDCW140VNX	150	75

Dimensions and pipe connections

<HMA100V, HMA100VM>

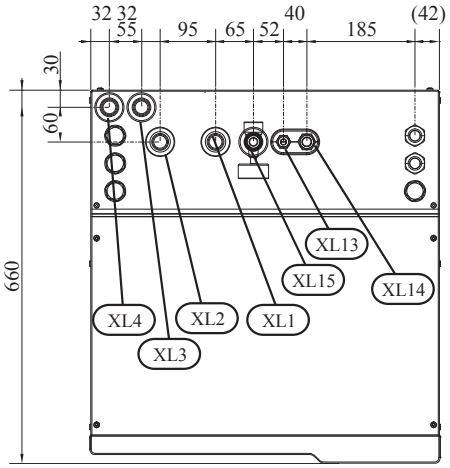

<HMS140V>

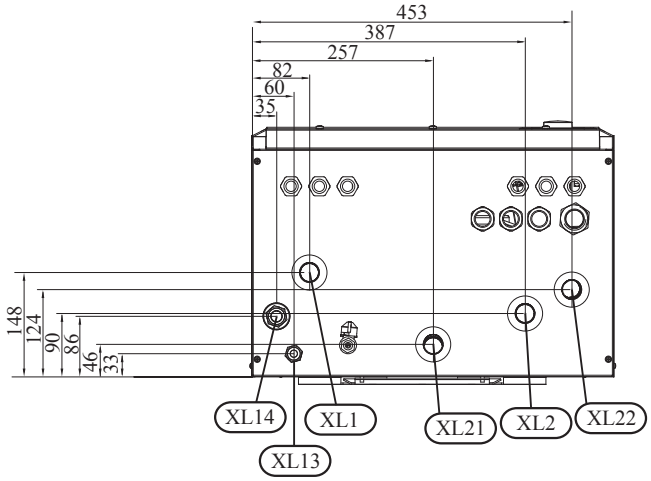

		HMA100	HMS140
XL1	Climate system supply	22 mm	28 mm
XL2	Climate system return	22 mm	28 mm
XL3	Cold water	22 mm	R1 external
XL4	Hot water	22 mm	R1 external
XL13	Liquid line refrigerant	3 / 8″	3 / 8″
XL14	Gas line refrigerant	5 / 8″	5 / 8″
XL15	Connection safety valve, manometer		
XL21	Tank circuit supply	–	28 mm
XL22	Tank circuit return	–	28 mm

<HT30>

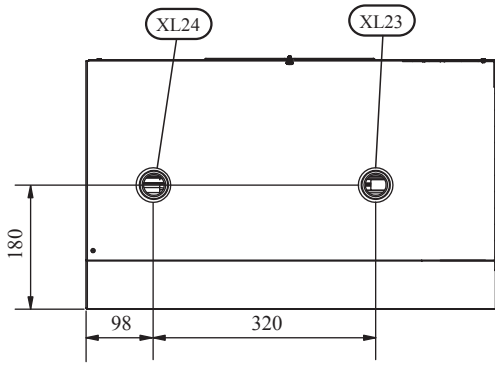

<MT300>

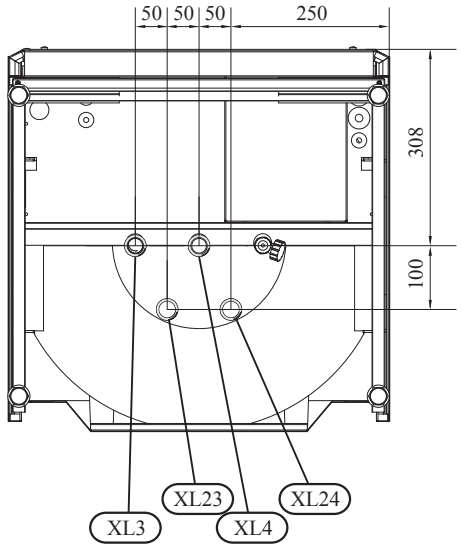

<MT500>

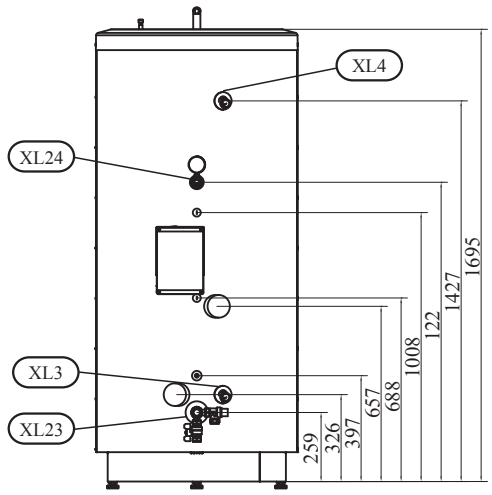

		HT30	MT300	MT500
XL3	Cold water	–	G1 ext.	G1 ext.
XL4	Hot water	–	G1 ext.	G1 ext.
XL23	Circulation supply	G1 ext.	G1 ext.	28 mm
XL24	Circulation return	G1 ext.	G1 ext.	28 mm

Pump capacity diagram

<HMA100V, HMA100VM>

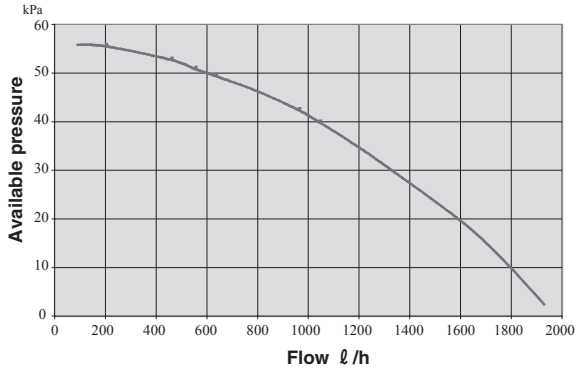

<HMS140V>

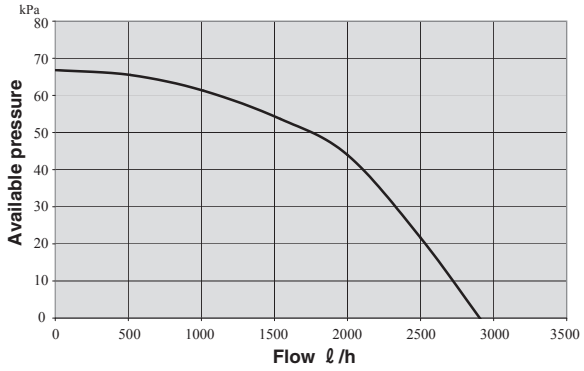

Connection of extra circulation pump

When connecting extra circulation pumps, requirements for pressure, maximum flow etc must be met. See page 67 for location.

NOTE

Over flow valve must be installed in case extra circulation pump is used.

The circulation pump may become damaged.

Connecting the climate system

Pipe connections for the climate system are made at the top.

- All required safety devices and shut-off valves (installed as close to the indoor unit as possible) must be fitted.
- Install the bleed valves where necessary, highest point of the water system in usual case.
- The safety valve (FL2) must be installed as illustrated. The entire length of the overflow water pipe from the safety valves must be inclined to prevent water pockets and must also be frost proof.
- The end of overflow pipe from the safety valves must be left open to the atmosphere. The water may drip from the pipe.
- HT30 doesn't have a port for FL2. Safety valve should be installed on site.
- HMS140V needs to connect a buffer vessel on the hot water tank even if hot water supply is not necessary.

  See connecting the hot water heater for details.

<HMA100V, HMA100VM>

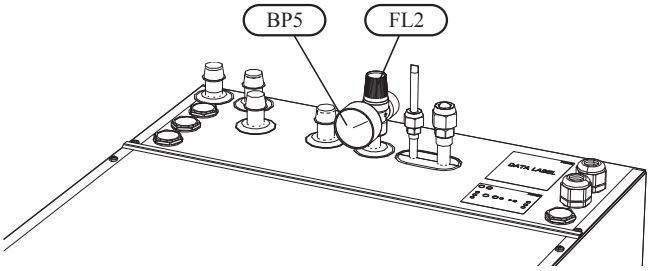

<HMS140V>

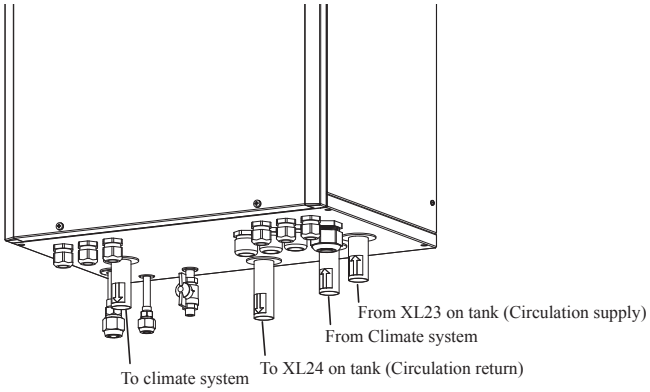

<MT300>

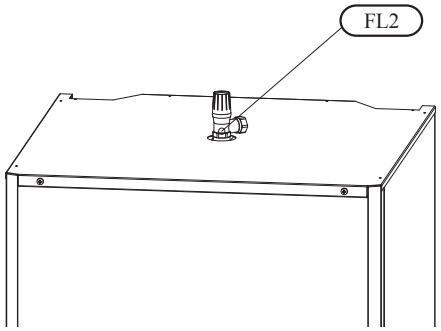

<MT500>

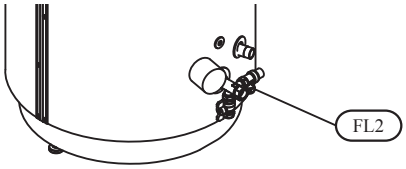

- When connecting to a system with thermostats on all radiators, an overflow valve must be fitted, or some of the thermostats must be removed to ensure sufficient flow.
- See section Dockings on page 66 for outline diagram.

Connecting the hot water heater

Connecting hot water tank to HMS140V

For HMS140V, it is necessary to connect hot water tank or baffer vessel.

- Tank and its pipings to indoor unit must be installed indoors where the temperature wouldn't drop below 15 °C in order to prevent pipings from icing.
- Maximum piping length between HMS140V and tank is 10 m
- Tank unit should be placed on firm, preferably a concrete floor or foundation.
- Tank unit can be aligned using the adjustable feet.
- Ensure that there is 1000 mm free space in front and 300 mm above the product for future service.

<HT30>

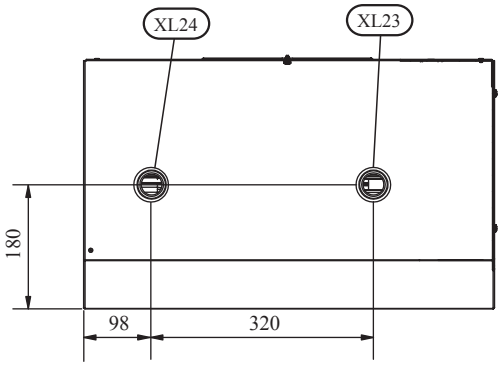

<MT300>

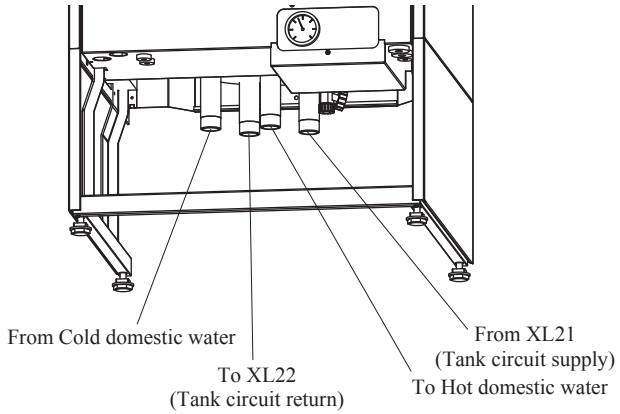

<MT500>

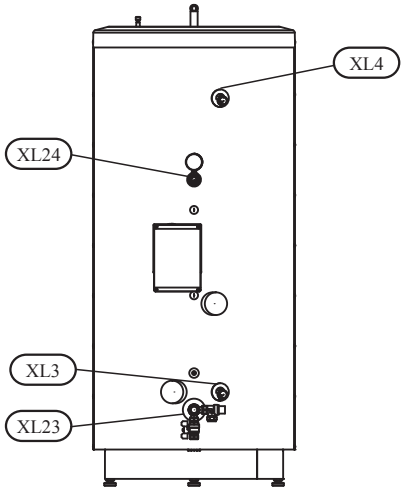

Connecting hot water coil to water main

The water heater in the indoor unit must be supplied with necessary set of valves.

- There must be a mixing valve if the temperature exceeds 60 °C.
- Thermostatic mixing valve is necessary for hot water supply at a stable temperature even if the temperature does not exceed 60 °C
- The safety valve must have a maximum 10.0 bar opening pressure and be installed on the incoming domestic water line according to outline diagram. The entire length of the overflow water pipe from the safety valves must be inclined to prevent water pockets and must also be frost proof.
- The end of overflow pipe from the safety valves must be left open to the atmosphere. The water may drip from the pipe.
- See section Dockings on page 66 for outline diagram.

Extra electric hot water heater

The heat pump should be supplemented with an electric water heater, if a hot tub or other significant consumer of hot water is installed.

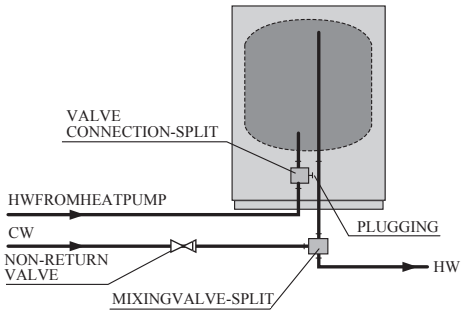

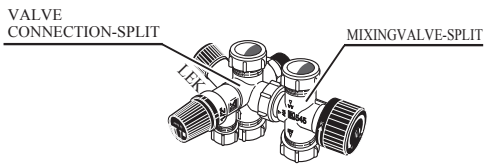

Connection of external heat source

Connect an external heat source such as gas or oil boiler to (XL8) (in) and (XL9) (out) on indoor unit (dimension G1 internal). To use these connections, the corresponding "Punchout" parts in the outer panel must be removed. Also cut off the insulation above the connections.

<HMA100V, HMA100VM>

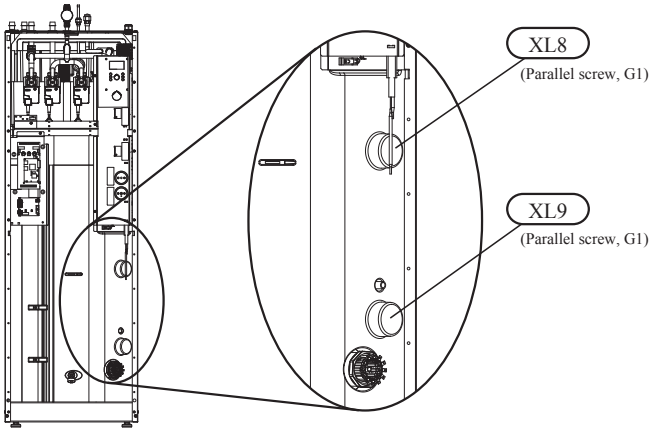

<HMS140V>

HMS140V doen't have a port to connect external heat source but MT300 and MT500 have it.

MT300

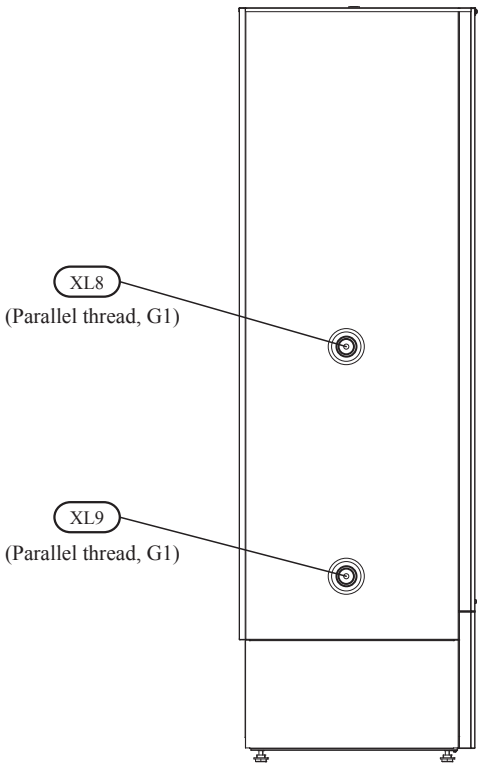

MT500

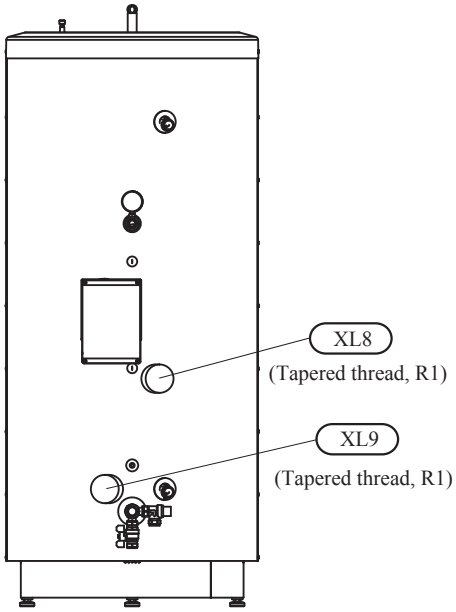

Waste exchanger part (HMA100V, HMA100VM only)

Indoor unit has a waste at the exchange section. A hose routes any waste water past the product's electronics to minimise the risk of damage. If necessary, a hose extension can be connected.

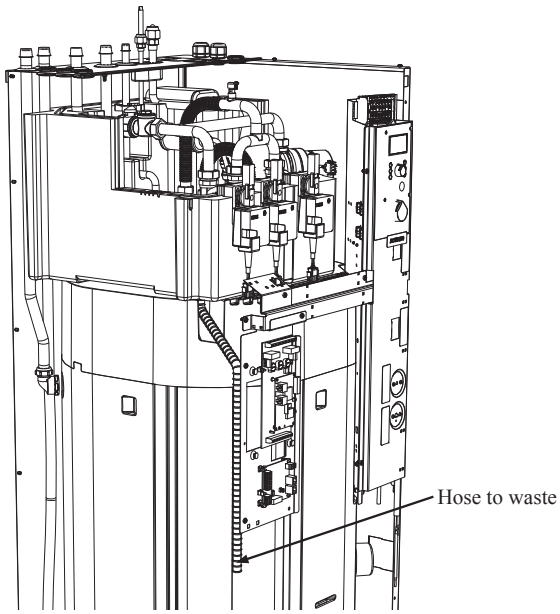

Connecting refrigerant pipes

See Installation manual for outdoor unit.

Dockings

Hydrolution with climate system and any external heat source

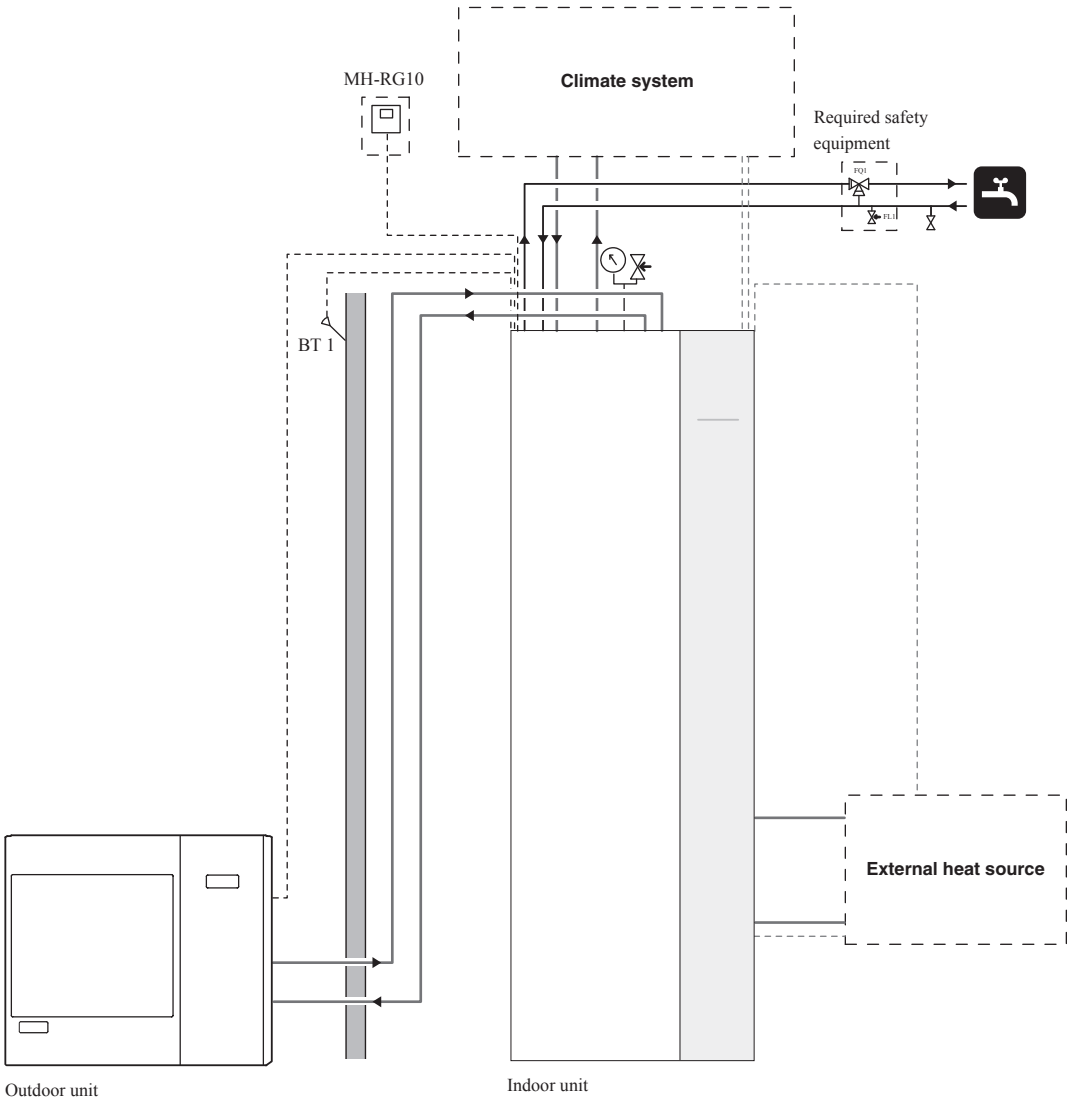

NOTE

These are the outline diagrams. Actual installations must be planned according to applicable standards.

Symbol key

Symbol	Meaning
	Venting valve
	Shut-off valve
	Non-return valve
	Control valve
	Safety valve
	Temperature sensor
	Expansion vessel
P	Pressure gauge
	Circulation pump
	Shunt / shuttle valve
	Fan

Climate system

Radiator system

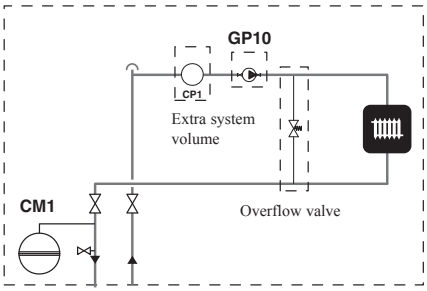

Under floor heating systems

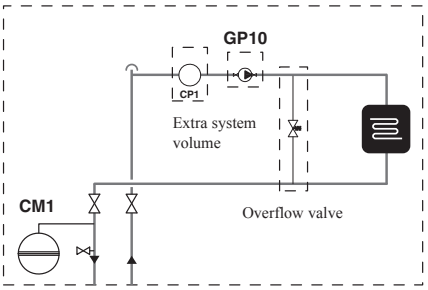

Fan convector system

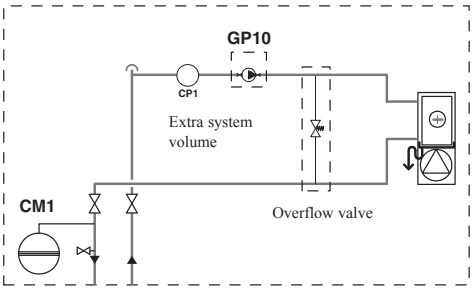

Radiator and under floor heating for heating as well as fan convector system for cooling

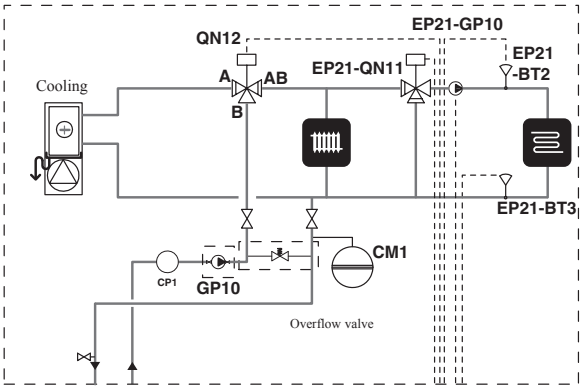

Double under floor heating system for heating and fan convector for cooling

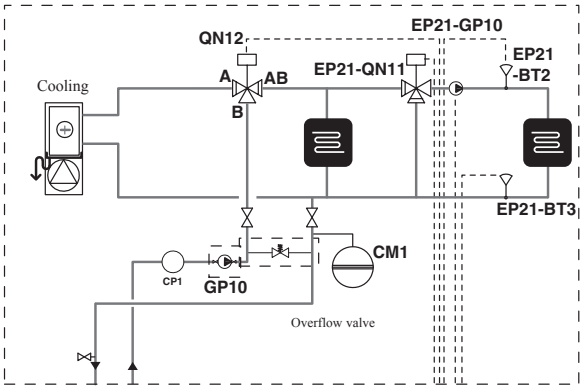

External heat source

Solar panels

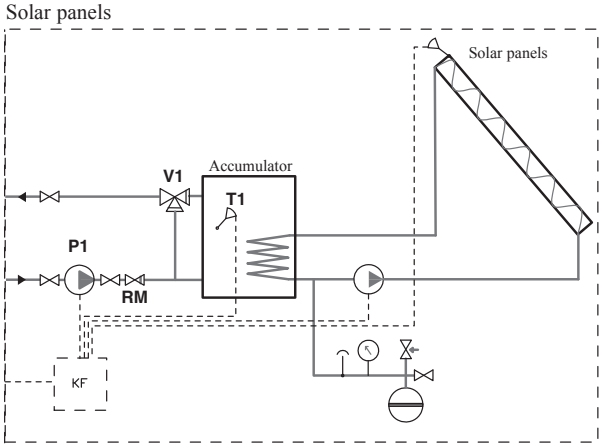

Wood-fired boiler with accumulator

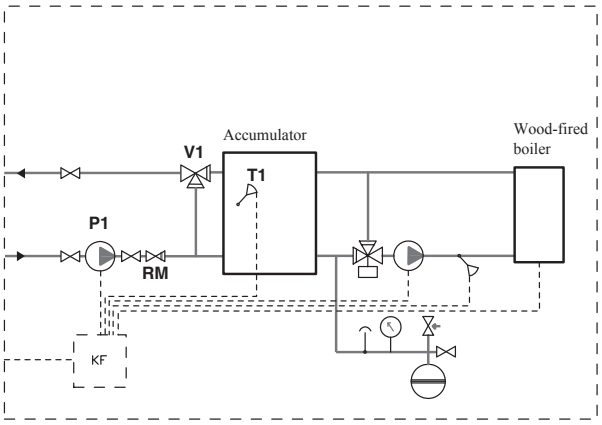

External heat source

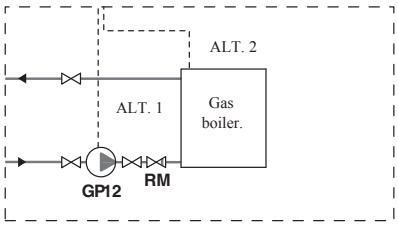

Oil/pellet boiler

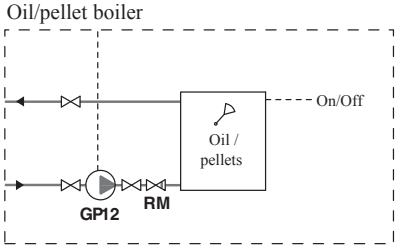

Exhaust air heat pump

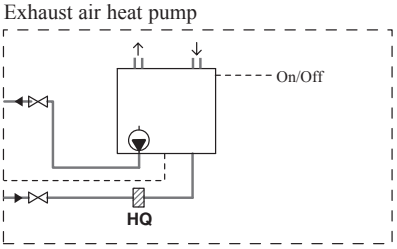

Explanation

BT1	Temperature sensor, outdoor	EP21−QN11	Shunt valve	QN12	Shuttle valve for Cooling / Heating
CM1	Expansion vessel	GP10	External Circulation pump	RM	Non-return valve
CP1	Buffer vessel	GP12	Circulation pump	T1	Temperature sensor
EP21−BT2	Temperature sensor, supply line 2	HQ	Strainer	V1	Shunt valve
EP21−BT3	Temperature sensor, return 2	KF	External control		
EP21−GP10	Circulation pump for heating system 2	P1	Circulation pump		

Electrical installation

General

Indoor unit must be installed via an isolator switch in accordance with the local codes and regulations.

Other electrical equipment, except the outdoor sensors, current transformers and outdoor unit are ready connected at the factory.

- Disconnect the indoor unit and outdoor unit before insulation testing the house wiring.
- For recommended fuse ratings, refer to the following table.

Indoor	Outdoor	230V 1AC	230V 3AC	400V 3NAC
HMA100V	FDCW71VNX	50A	—	16A
	FDCW100VNX	50A	—	16A
HMA100VM	FDCW71VNX	—	32A	—
	FDCW100VNX	—	32A	—
HMS140V	FDCW140VNX	63A	—	25A

- If the building is equipped with an earth-fault breaker, Hydrolution should be equipped with a separate one.
- Connection must not be carried out without the permission of the electricity supplier and under the supervision of a qualified electrician.
- For interconnection cable between indoor unit and outdoor unit, the size shown on the table below is recommended.

Indoor	Outdoor	Cable size
HMA100V	FDCW71VNX FDCW100VNX	5×2.5 mm^2
HMA100VM	FDCW71VNX FDCW100VNX	5×2.5 mm^2
HMS140V	FDCW140VNX	3×6 mm^2 (power cable*1) 3×1.5 mm^2 (communication cable)

*1 Maximum current on power cable is 25A.
Choose suitable size in accordance with regulations.

Indoor	Tank	Cable size
HMS140V	HT30 MT300 MT500	5×6 mm^2 ×2 (power cable*2) 5×1.5 mm^2 (sensor cable) 4×1.5 mm^2 (sensor cable)

*2 Maximum current on power cable is 26A for 230V 1AC, 9A for 400V 3NAC.
Choose suitable size in accordance with regulations.

- Outdoor unit is equipped with a single phase compressor. This means that phase L3 is loaded with up to 15A for FDCW71VNX and FDCW100VNX, 25A for FDCW140VNX during compressor operation.

NOTE

Electrical installation and service must be carried out under the supervision of a qualified electrician. Electrical installation and wiring must be carried out in accordance with the stipulations in force.

NOTE

The switch (SF1) must not be switched to" 1" or" ⚠ " until the boiler has been filled with water. The circulation pump and immersion heater may become damaged.

Principle diagram, electrical installation

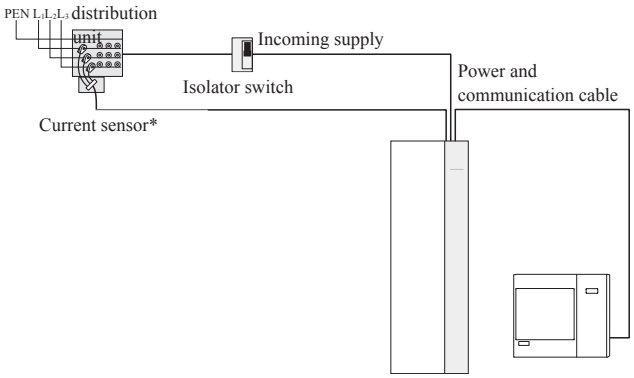

* Only in a 3-phase installation.
For details, see Connecting the current limiter.

Electrical components

<HMA100V, HMA100VM>

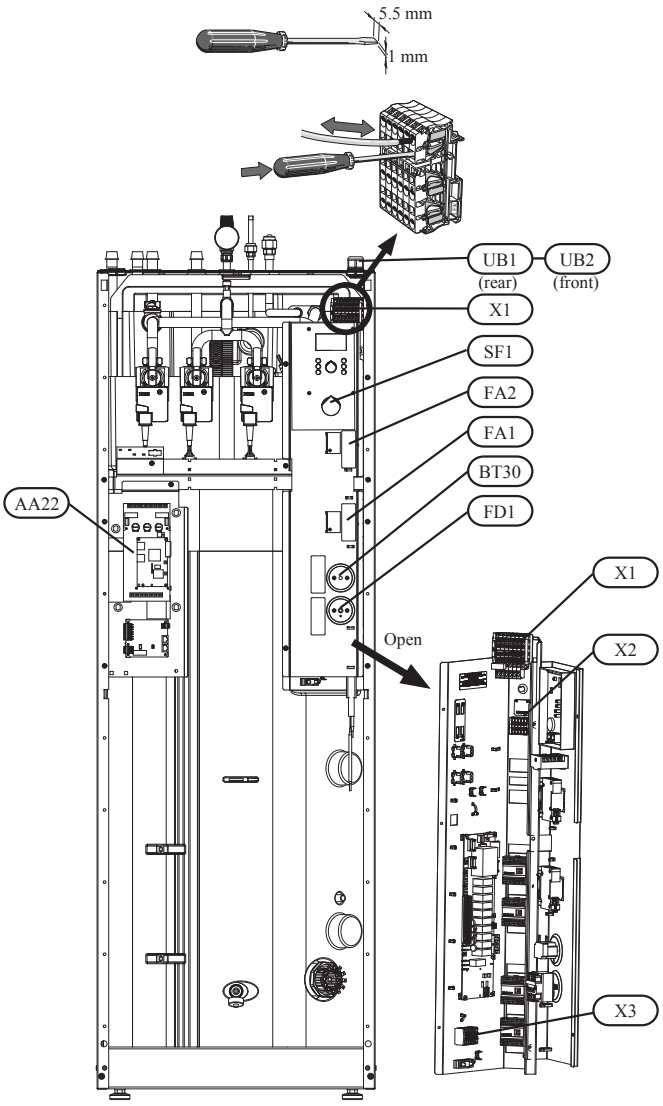

<HMS140V>

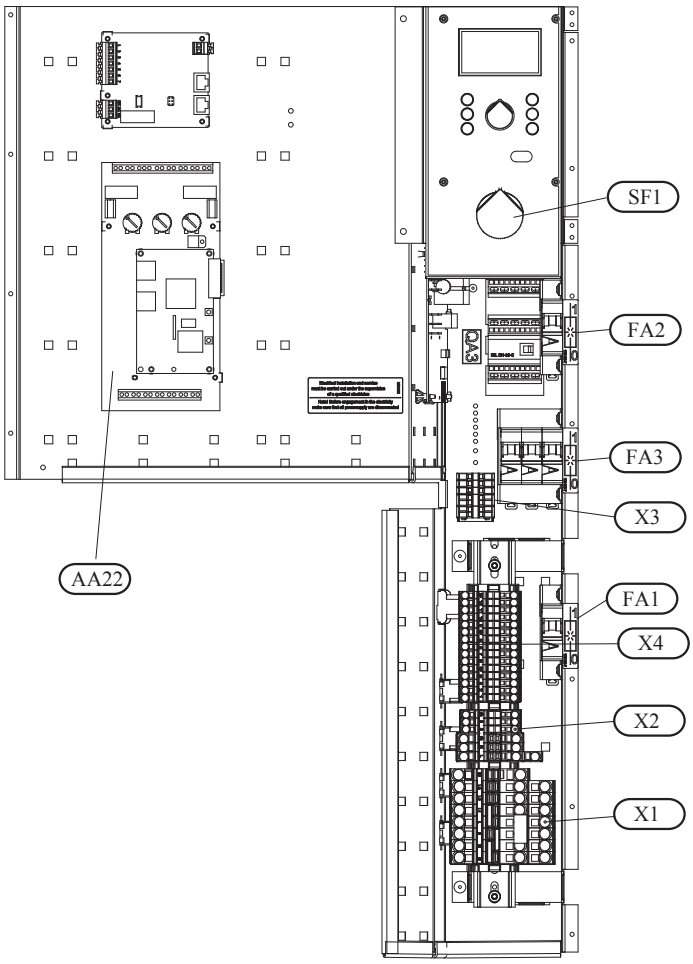

<MT300>

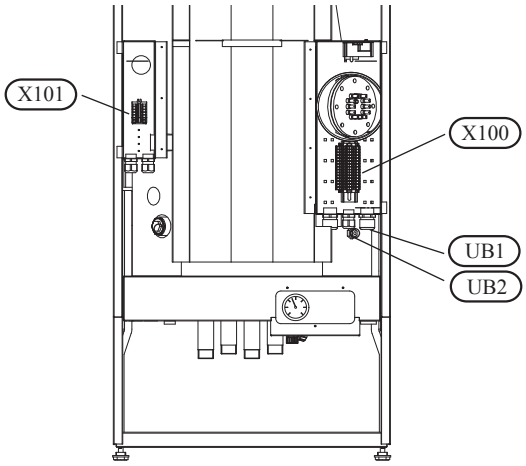

<MT500>

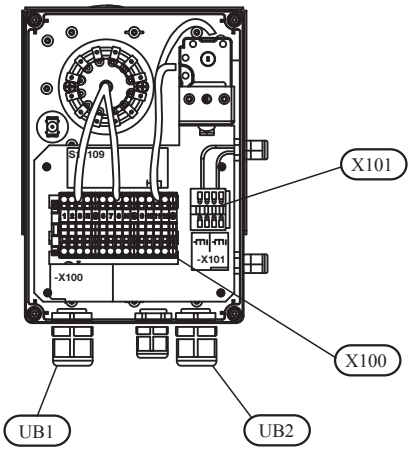

<HT30>

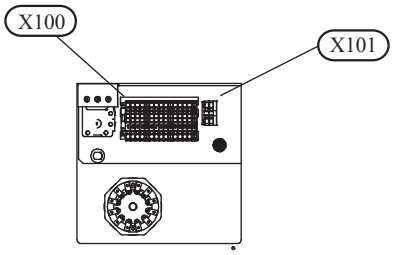

Explanation

Symbol	Type	Scale length of conductor (mm)	
		HMA100	HMS140
AA22	PCB		
UB1	Cable gland		
UB2	Cable gland		
X1	Terminal block, incoming mains supply	14	19
X2	Terminal block, outgoing supply and communication to outdoor unit	9	15 (supply) 13 (comm.)
X3	Terminal block, external heat source	9	9
X4	Terminal block, outgoing supply to tank	–	13
X100	Terminal block, incoming supply from indoor unit	–	13
X101	Terminal block, sensor from indoor unit	–	9
SF1	Switch		
FA1	Miniature circuit breaker, control system		
FA2	Miniature circuit breaker, outdoor unit		
FA3	Miniature circuit breaker, tank		
BT30	Thermostat, standby mode		
FD1	Temperature limiter		

Connecting the supply

Incoming supply is connected on terminal block (X1) via cable gland (UB1). The cable must be dimensioned according to the applicable norms.

HM270V can be connected with either 400 V 3NAC or 230 V 1AC.

400 V 3NAC/230V 3AC: Connect incoming supply according to the markings on terminal (X1).

230 V 1AC: Install the supplied straps between terminals L1 and L2 as well as between L2 and L3 on incoming terminal block (X1). Connect incoming supply according to the terminal markings.

<HMA100V, HMA100VM>

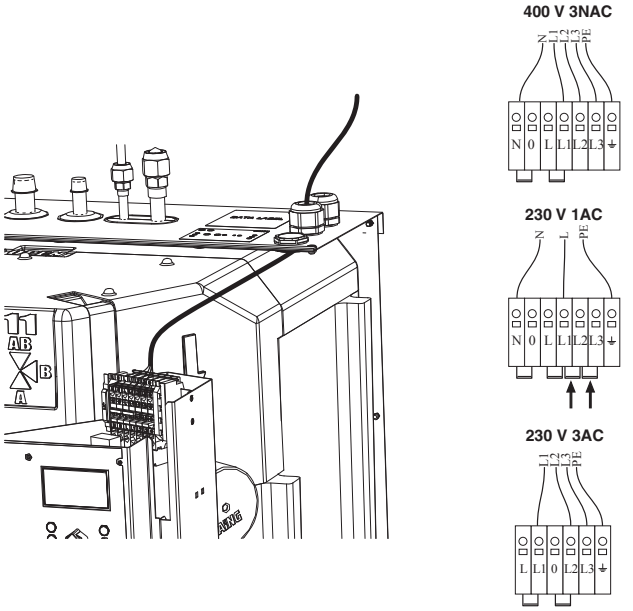

<HMS140V>

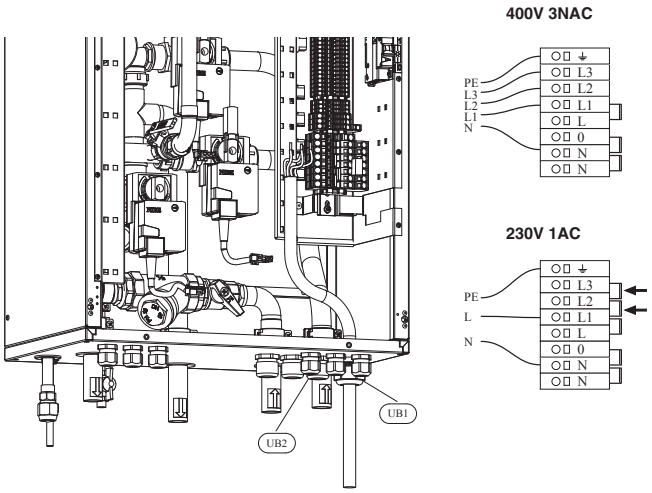

Miniature circuit-breaker (FA1, FA2, FA3)

The automatic heating control system, circulation pumps and their wiring in indoor unit, are internally fuse protected with a miniature circuit breaker (FA1).

Outdoor unit and equipment are internally fuse protected in indoor unit, with a miniature circuit breaker (FA2).

Tank unit and equipment are internally fuse protected in indoor unit with a miniature circuit breaker (FA3).

Temperature limiter (FD1)

The temperature limiter (FD1) cuts the current supply to the electrical heater if the temperature rises up between 90 and 100°C and can be manually reset.

Resetting

The temperature limiter (FD1) is accessible behind the front cover. The temperature limiter is reset by firmly pressing in its button.

NOTE

Reset the temperature limiter, it may have tripped during transport.

Connection between indoor unit and outdoor unit

The cable between the units must be connected between terminal block for incoming supply (TB) in outdoor unit and terminal block (X2) in indoor unit via cable gland (UB2).

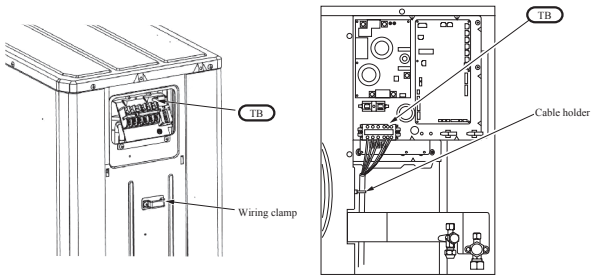

FDCW71 **FDCW100, 140VNX**

Note!

- Outdoor unit must be earthed before the wiring between the units is connected.
- The wiring must be attached so that the terminal block is not put under stress.
- Scale length of conductor is 8 mm.

Connect phase (brown), neutral (blue), communication (black and grey) as well as earth (yellow/green) as illustrated:

<FDCW71VNX>

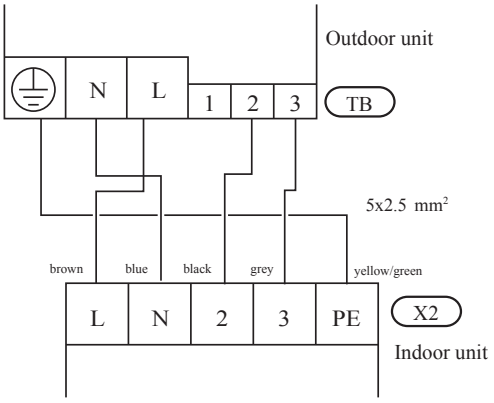

<FDCW100VNX, 140VNX>

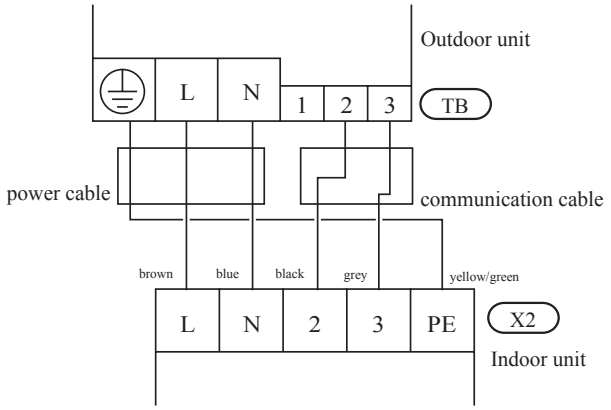

Connection between indoor unit and tank (HMS140V only)

Cable between indoor unit and tank must be connected between the terminal block (X4) in indoor unit and the terminal block (X100) in tank, the terminal on PCB (AA22-X4) in indoor unit and the terminal block (X101) in tank respectively.

Connect the terminals as shown in the following figure.

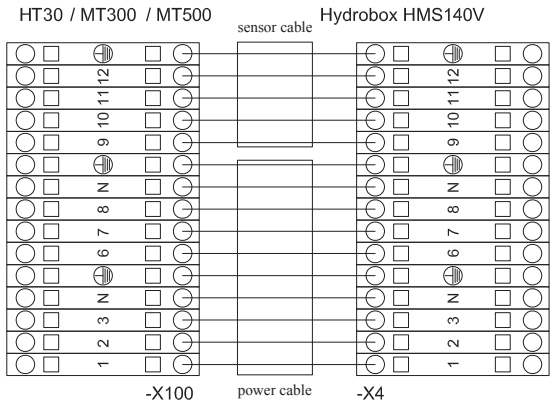

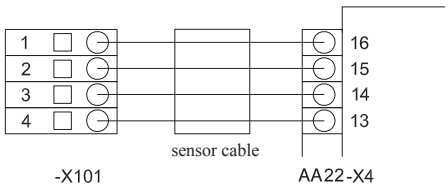

Main circuit breaker size setting (R24 on AA22)

(Applicable only in case of 3 phase power supply)

The size of the property's main circuit breaker is set using the knob (R24) on the circuit limiter PCB, (AA22). The setting can be read in Menu 8.3.4.

Main fuse rating	Knob position
16	16
20	20
25	25 (factory setting)
35	35
50	50
63	63

Setting max power, electric heater (R25 on AA22)

Setting of the different maximum immersion heater outputs is made using the knob (R25) on the PCB (AA22). Set value displayed in Menu 8.3.2. The following table only applies when Menu 9.2.8 Add. heat type is set to "Internal power" (factory setting).

When the outdoor unit is in operation, maximum heater output is limited to 6.0 kW.

Immersion heater, output (kW)	Knob position	Max. electric power (Menu 8.3.2)	Max load phase (A)*		
			HMA100V	HMA100VM	HMS140V
4.0	A	2	15	29	25
6.0	B	3	15	30	25
9.0	C (factory setting)	4	15	30	25

* Only applies to 3 phase connection.

Setting max boiler temperature (R26 on AA22)

The setting of the different maximum boiler temperatures is made on the knob (R26) on the PCB (AA22). Set value displayed in Menu 9.3.1.

Boiler temperature	Knob position
55	A
60	B
65	C (factory setting)
65	D
65	E
65	F

PCB, terminal and wiring diagram

The following connections are made on the PCB (AA22).

See wiring diagram for complete wiring diagram of the PCB.

<HMA100V, HMA100VM>

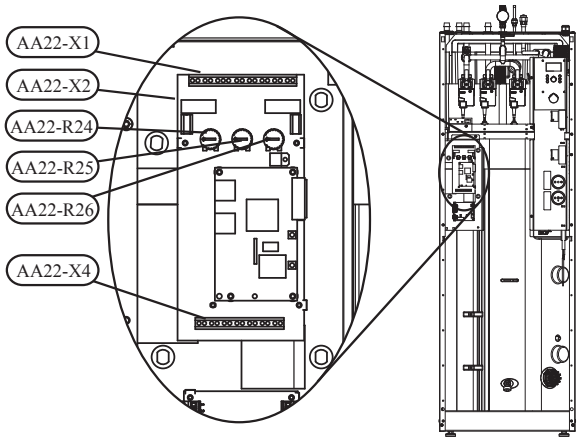

<HMS140V>

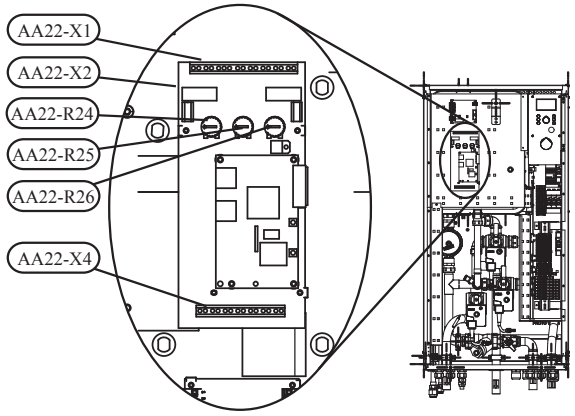

Connecting the outdoor air sensor

Install the outdoor air temperature sensor in the shade on a wall facing north or north-west, so it is unaffected by the morning sun. Connect the sensor to terminal block X1:1 and X1:2 on the PCB (AA22) via cable gland UB2. Use a 2 core cable of at least 0.5 mm^2.

If the outdoor air temperature sensor cable runs close to power cables, shielded cable must be used.

If a conduit is used it must be sealed to prevent condensation in the sensor capsule.

Connecting the current limiter

When many electrical appliances are connected in the property at the same time as the electric heater is operating, there is a risk of the property's main fuse tripping. Hydrolution is equipped with an integrated current limiter that controls the electrical steps and the compressor. If necessary, the electrical steps are disengaged and/or the compressor frequency is reduced.

A current sensor should be installed on each incoming phase conductor in to the distribution box to measure the current. The distribution box is an appropriate installation point.

Connect the current sensor to a multi-core cable in an enclosure next to the distribution box. Use unscreened multicore cable of at least 0.50 mm^2, from the enclosure to indoor unit.

In indoor unit connect the cable to the PCB (AA22) on terminal X1:8–11.

L1 connects on X1:8 and X1:11.

L2 connects on X1:9 and X1:11.

L3 connects on X1:10 and X1:11.

X1:11 is the common terminal block for the three current sensors.

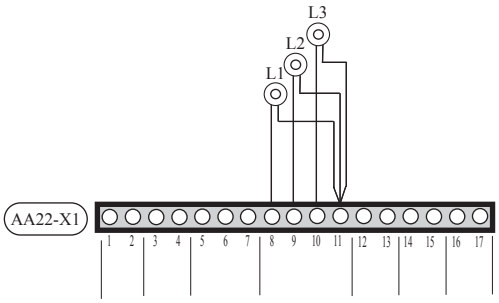

Connection of centralised demand control/tariff

In case centralised demand control or tariff control is used this can be connected to the terminal block (X1) on the PCB (AA22).

Tariff A prohibits energizing immersion heater. It is valid when X1:5 and X1:7 is closed.

Tariff B prohibits heat pump operation. It is valid when X1:6 and X1:7 is closed.

Tariff A and B can be used in combination.

Connecting external contacts

MH-RG 10, sensor for changing the room temperature

An external sensor (MH-RG10) can be connected to indoor unit to change the flow temperature and the target room temperature. Connect the sensor to the terminal block from X4:1 to X4:3 on the PCB (AA22) according to wiring diagram.

Activated in Menu 9.3.6.

The target supply water temperature is adjusted according to the gap between actual room temperature and set room temperature. The set room temperature is set using the knob on MH-RG 10 and is shown in Menu 6.3.

In addition, the heating system to which the control is valid can be chosen in Menu 6.2.

Contact for changing the room temperature

An external contact such as a room thermostat or a timer can be connected to indoor unit to change the flow temperature and consequently the room temperature. The contact must be potential free and non-locking.

When the contact is closed, the heating curve offset is changed by the number of steps shown here. The value is adjustable between -10 and +10. It is possible to set the offset value on system 1 and 2 independently.

Terminals to be connected

Heating system 1: X1:3 and X1:4 on the PCB AA22

Heating system 2: X1:14 and X1:15 on the PCB AA22

Menu to change the offset value

Heating system 1: Menu 2.4 “External adjustment”

Heating system 2: Menu 3.5 “External adjust. 2”

Contact for activation of “Extra hot water”

An external contact can be connected to HM270V for activation of the “Temporary extra hot water” function. The contact must be potential free and non-locking and connected to terminal block X6:1 and X6:2 on PCB (AA22).

When the contact makes for at least one second, the “Temporary Extra hot water” function is activated. The function is cancelled automatically after 3 hours.

Alarm outputs

External indication of common alarms is possible through the relay function on the PCB (AA22), terminal block X2:1–2.

When switch (SF1) is in the “0” or “⚠” position the relay is in the alarm position.

Docking specific connection

Hydrolution is prepared to control an external circulation pump (GP10 and EP21−GP10), external mixing valve (EP21−QN11), shuttle valve for cooling (QN12), as well as external heat source e.g. oil, gas or pellets.

External circulation pump (GP10, accessory)

Connect external circulation pump (GP10) to terminal block X3:1 (230 V), X3:4 (N) and X3:5 (PE).Max output is 50W

The circulation pump (GP10 and EP21−GP10) is active when the circulation pump (GP1) in indoor unit is active.

NOTE

Be sure to install flow relief valve when an external circulation pump is installed.

The circulation pump may become damaged.

External mixing valve (EP21-QN11, accessory)

Connection and function are described in the Installation instructions for accessory ESV 22.

Shuttle valve, cooling (QN12, accessory)

Connection and function are described in the Installation instructions for accessory VCC 22.

External heat source control

Hydrolution can control an external heat source.

ON/OFF control of the external heat source can be done by following settings.

1. Remove the strap on terminal block X3:2 and X3:3.
2. Connect the signal input line to terminal block X3:2 (230 V) and X3:4 (N) (max 0.2 A).
3. Set “Ext. 1 step” in Menu 9.2.8.

Summary of the function of the terminals on PCB AA22

*
Optional other than outdoor air sensor (BT1) and current sensor (L1, L2 and L3)

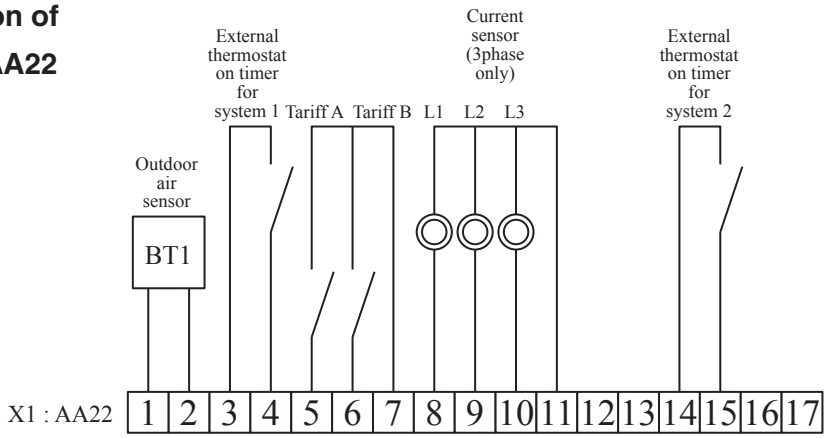

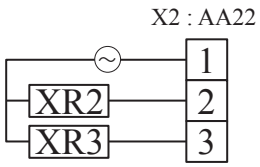

XR2 : Alarm output
XR3 : Operation output

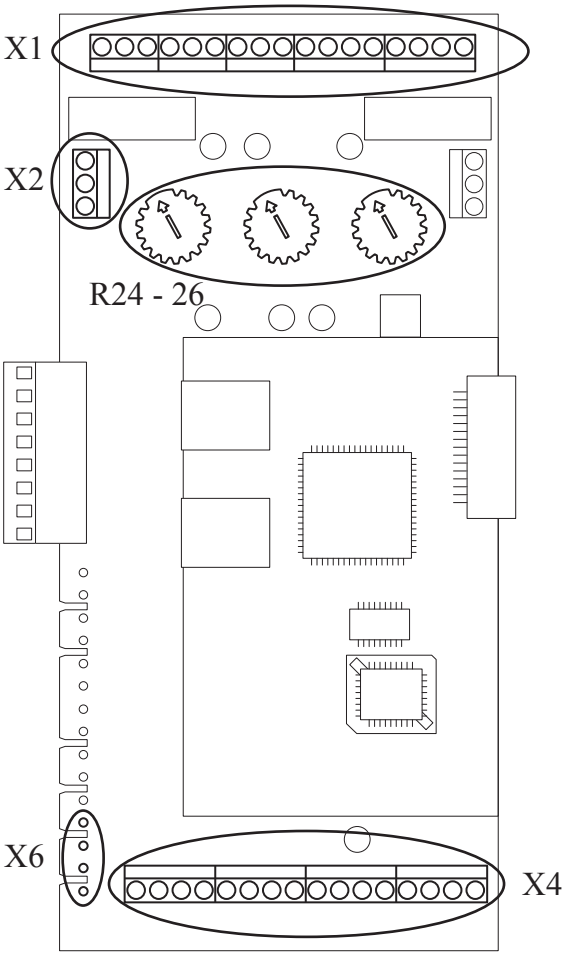

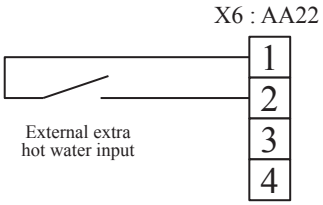

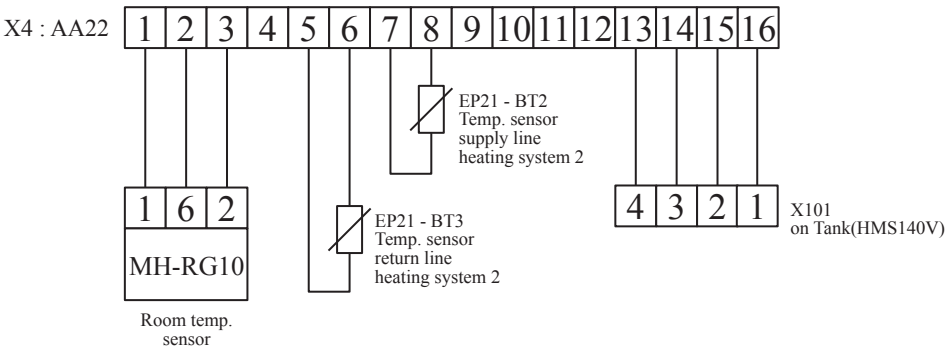

How to connect external circulation pump and heat source on X3

<HMA100V, HMA100VM>

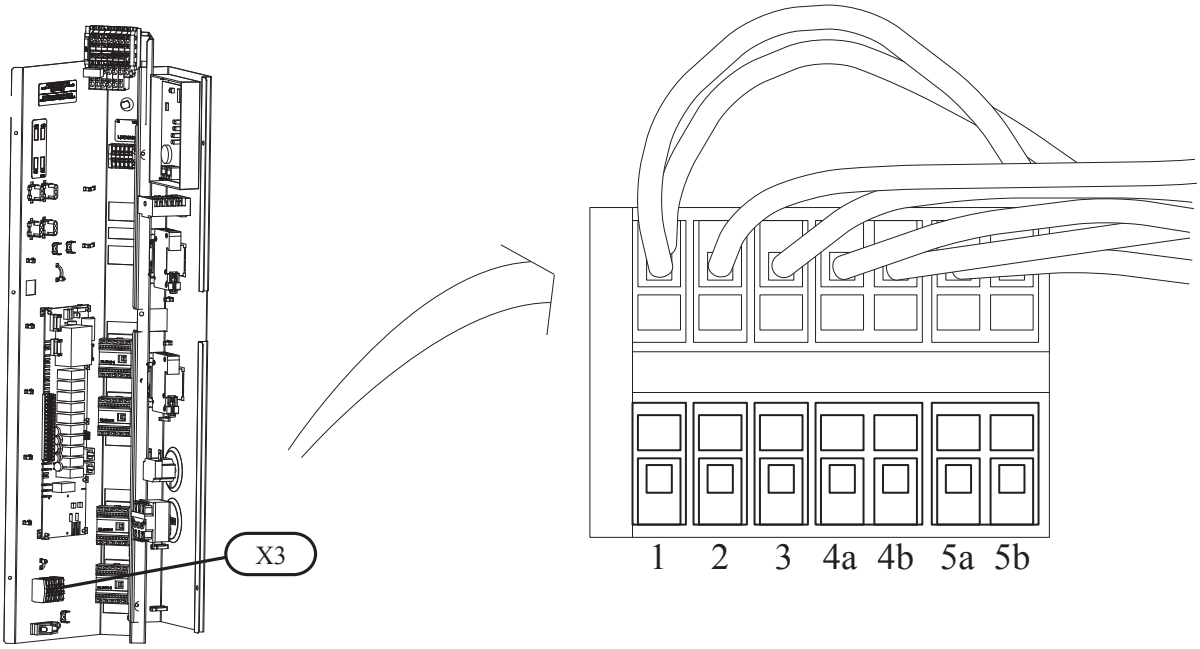

<HMS140V>

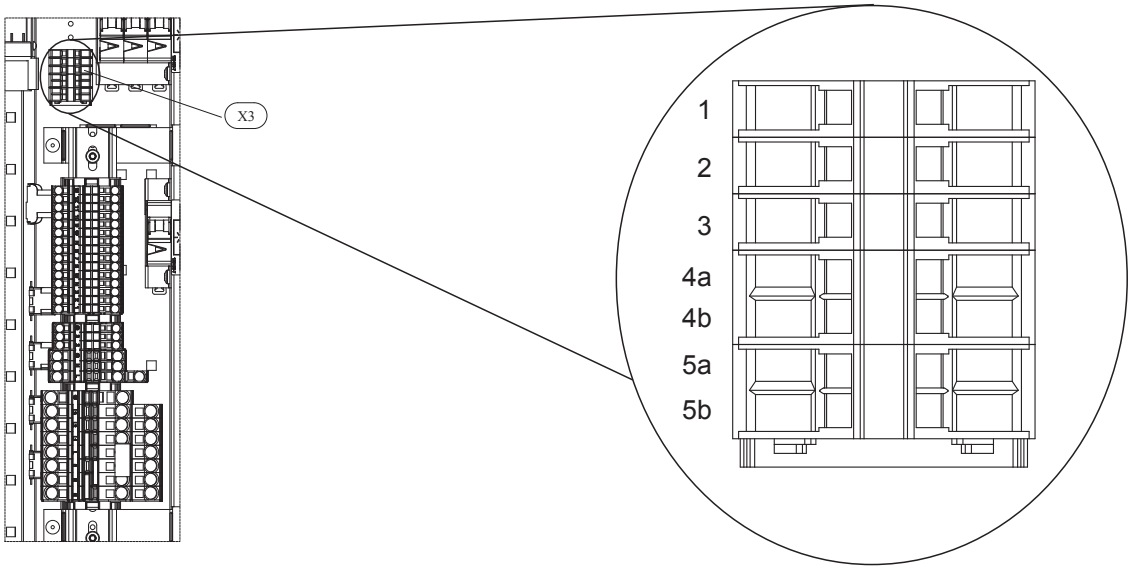

How to connect external circulation pump

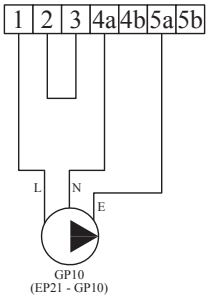

How to connect external heat source

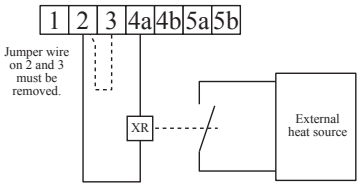

NOTE

Max output is up to 50W.

NOTE

Max current is 0.2A

Start-up and inspection

Preparations

Connect outdoor and indoor unit (refrigerant pipe and wiring) and connect indoor unit to the climate system.

Filling the climate system

1. Ensure that the pressure gauge (BP5) is visible.
2. Ensure the valve to expansion vessel is closed (HMS140V only).
3. Connect a hose to the filling valve (QM1) and open the valve to fill the boiler and the radiator system.
4. After a while the pressure gauge (BP5) will show rising pressure.
5. When the pressure has reached about 2.5 bar a mix of air and water starts to emerge from the safety valve (FL2). Close the filling valve (QM1).
6. Open the valve to expansion vessel when air vent is completed (HMS140V only).

<HMA100V, HMA100VM>

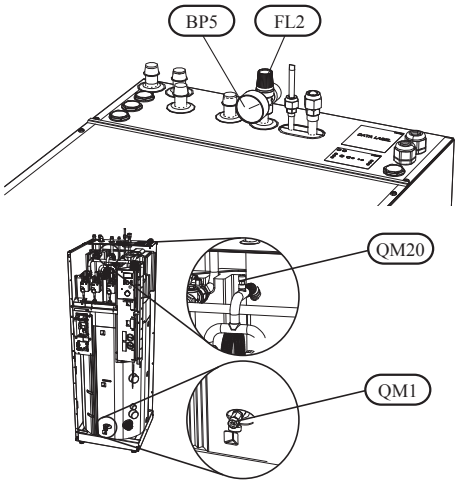

<HMS140V>
HT30

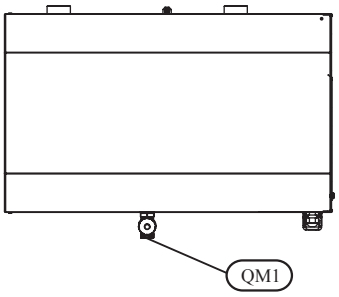

MT300

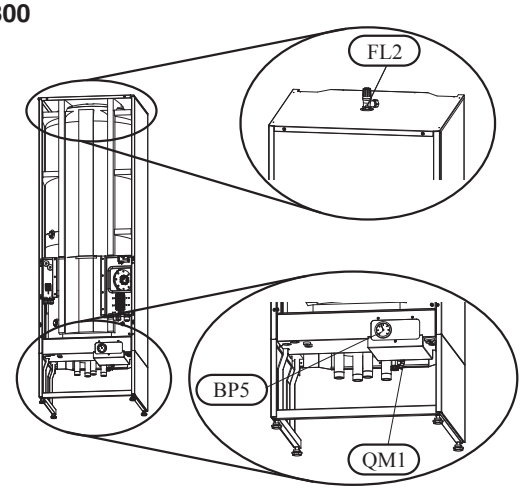

MT500

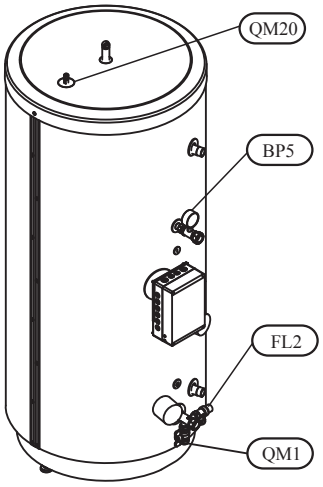

Venting the climate system

1. Vent indoor unit through the safety valve (FL2) and the rest of the heating system through the relevant venting valves.
2 . Open the valve to expansion vessel when air vent is completed. (HMS140V only)
3. After opening the valve, vent indoor unit through venting valve on indoor unit to bleed rest of air ompletely. (HMS140V only)

Keep topping up and venting until all air has been removed and the correct pressure has been obtained.

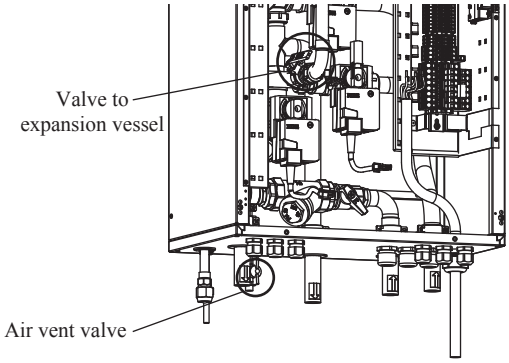

NOTE

Be sure to bleed air in the climate system completely.

The circulation pump may become damaged.

Filling the hot water coil

The hot water coil is filled by opening a hot water tap.

Commissioning

Outdoor unit

1. Check that the miniature circuit-breaker (FA2) in indoor unit is on.

Indoor unit

1. Check that the temperature limiter (FD1) has not tripped.
2. Switch on the main circuit breaker and check that the miniature circuit breaker (FA1, FA3) in indoor unit is on.
3. Set switch (SF1) to “1” (the switch should be switched on for 6 hours before the compressor can be started).

   When switch (SF1) is set to “0” - wait at least 1 minute before setting it back to “1”.
4. Select operating mode “Add. heat only” by holding in the operating mode button for 7 seconds.
5. Set the date and time in Menu 7.1 and 7.2.
6. Set the language in Menu 8.1.2.
7. Select “Service” in Menu 8.1.1.
8. Select additional heat source type in Menu 9.2.8.
9. Set the fuse size on knob (R24). Check the value in Menu 8.3.1.
10. Set the max immersion heater output on knob (R25). Check the value in Menu 8.3.2.
11. Select the desired heating curve in Menu 2.1.2 and set the parallel offset using the knob.
12. Check that the hot water temperature in Menu 1.0 exceeds 25 °C.
13. When point 12 has been carried out, select operating mode “Auto”.

The heat pump starts 30 minutes after the outdoor unit is powered if there is a heat demand.

Setting system flow heating

1. Ensure that the heat pump produces heating for the climate system.
2. Select “On” in Menu 9.6.2.
3. Select the value in Menu 9.6.1. according to the table below.

FDCW71	FDCW100	FDCW140
55	40	55

NOTE

If it is not shown, set the Menu 8.1.1 to “Service”.

4. Check the supply and return line temperatures in Menu 2.5. Adjust the circulation pump speed in Menu 2.1.5 so that the difference between these temperatures is according to the diagram below.
5. Select “Off” in Menu 9.6.2.

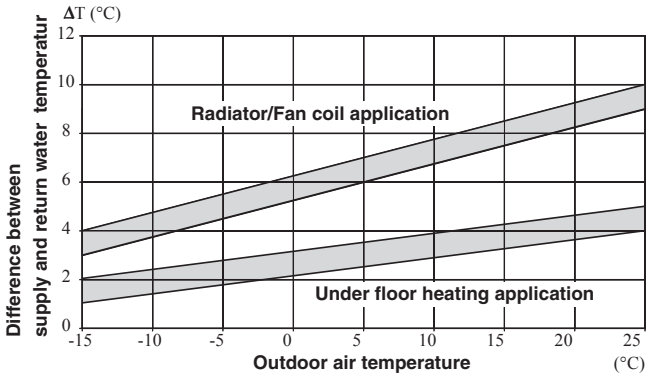

Setting system flow cooling

The factory setting 100% in Menu 2.2.5 is recommended.

Commissioning Hydrolution without outdoor unit connected

1. Check that the temperature limiter (FD1) has not tripped.
2. Switch on the main circuit breaker and check that the miniature circuit breaker (FA1) in indoor unit is on.
3. Set switch (SF1) to “1”.
4. Select operating mode “Add. heat only” by holding in the operating mode button for 7 seconds.
5. Set the date and time in Menu 7.1 and 7.2.
6. Select “Service” in Menu 8.1.1.
7. Select addition type in Menu 9.2.8.
8. Set the fuse size on knob (R24). Check the value in Menu 8.3.1.
9. Set the max immersion heater output on knob (R25). Check the value in Menu 8.3.2.
10. Select the desired heating curve in Menu 2.1.2 and set the parallel offset using the knob.

NOTE

Do not turn the switch (SF1) to 1 or ⚠ until the boiler has been filled with water.

The circulation pump and immersion heater may become damaged.

Checking external heat source controlled by the signal from indoor unit

1. Check if the signal wire is connected as instructed.
2. Select “Ext. 1 step” in Menu 9.2.8.
3. Select operating mode “Add. heat only” by holding in the operating mode button for 7 seconds.
4. Ensure that the max temperature from the external heat source does not exceed 65 °C.
5. Select operating mode “Auto” by pressing the operating mode button.

Checking external heat source controlled independently

1. Adjust the start temperature of the external heat source so that it starts earlier than the internal electric heater.
2. Adjust the stop temperature of the external heat source so that the temperature in indoor unit does not exceed 65 °C.

Inspection of the installation

Current regulations require the heating installation to be inspected before it is commissioned. The inspection must be carried out by a suitably qualified person and should be documented. Use the check list on the following page. The above applies to closed heating systems.

Do not replace any part of the split-system without carrying out new checks.

Cleaning the particle filter

Clean the particle filter (HQ1) after installation.

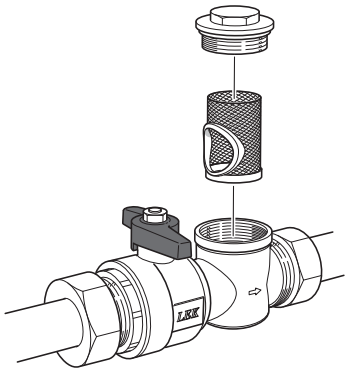

Secondary adjustment

Air is initially released from the hot water and venting may be necessary. If gurgling sounds can be heard from HM270V or from the climate system, the entire system will require additional venting.

Note! Use bleed valve (QM20), any external bleed valves as well as safety valve (FL2). The latter must be operated carefully as it opens quickly. When the system is stable (correct pressure and all air eliminated) the automatic heating control system can be set as required.

Basic Menu settings to be checked

1. Single heating application with a room sensor (MH-RG10)

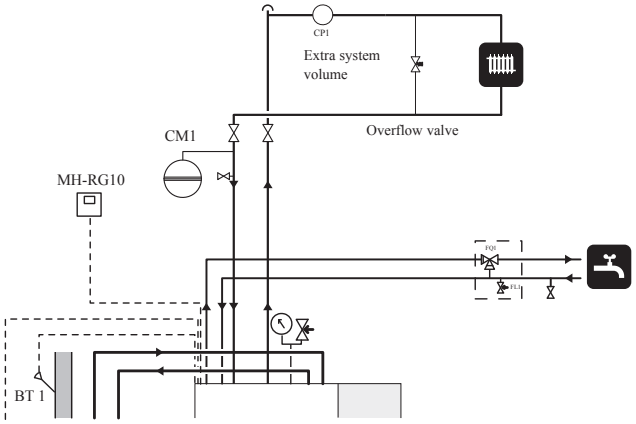

Fill in the altered set value on the blank cell of "Set value".
As for the set value which is already written in the cell, check if the setting is properly changed.

1. Initial settings

Function	Menu No.	Default value	Set value	Check	Remarks
Language	8.1.2	English	___	☐	Language setting used for display
Date	7.1	-	___	☐	
Time	7.2	-	___	☐	

2. Heating settings

Function	Menu No.	Default value	Set value	Check	Remarks
Heating curve	2.1.2	9	___	☐	
Offset heating	Knob (2.1.1)	0	___	☐	Offset value can be set by the knob in the control panel. Value can be checked in Menu 2.1.1
Min supply heating	2.1.4	25°C	___°C	☐	Adjust the min/max supply temperature according to the required feeding temperature of the emitter in the system.
Max supply heating	2.3	55°C	___°C	☐	
Circ-pump speed heat	2.1.5	100%	___%	☐	Adjust the circulation pump speed setting according to "Setting system flow heating".
Allow add.heat	8.2.1	Heat	___	☐	Setting whether the electric heater is used for heating.
Period time	8.5.1	60min	___min	☐	These settings decide the operation period of hot water and heating when both demand comes up at the same time. Period time defines a cycle time of hot water and heating operation, and Max time for HW defines the maximum hot water operation time of the period time.
Max time for HW	8.5.2	40min	___min	☐	
Stop temp heating	8.2.3	17°C	___°C	☐	Heating operation is prohibited when the outdoor air temperature exceeds the setting value.

3. Room sensor settings

Function	Menu No.	Default value	Set value	Check	Remarks
Room sensor type	9.3.6	Off	RG10	☐	In case this menu is not shown on the display, set the menu 8.1.1 to "S".
Heating system	6.2	Off	System1	☐	This setting defines which system the adjustment by the room sensor should be valid.

4. Hot water settings

Function	Menu No.	Default value	Set value	Check	Remarks
Start temperature HW	1.2	47°C	___°C	☐	These settings should be adjusted based on the hot water load in the property.
Stop temperature HW	1.3	53°C	___°C	☐	
Extra hot water function	see Item 5			☐	Setting is necessary when user use this function for larger hot water demand or for disinfection.

5. Extra hot water settings (in case it is required)

Function	Menu No.	Default value	Set value	Check	Remarks
Stop temperature XHW	1.4	65°C	___°C	☐	
Heat pump stop XHW	1.5	60°C	___°C	☐	Operable temperature range of the outdoor unit can be set.
Max heat p. time XHW	1.6	30min	___min	☐	Total operable time of heat pump during XHW operation can be set.
XHW Monday - Sunday (Weekly timer based extra hot water setting)	7.4.1 - 7.4.7	00:00-00:00	___	☐	The setting is invalid when start time and stop time is set at the same time (e.g. 22:00 - 22:00)
Interval XHW (Periodic extra hot water setting)	1.7	0days	___days	☐	Interval of the extra hot water operation is set.

2. Dual heating application with a room sensor (MH-RG10)

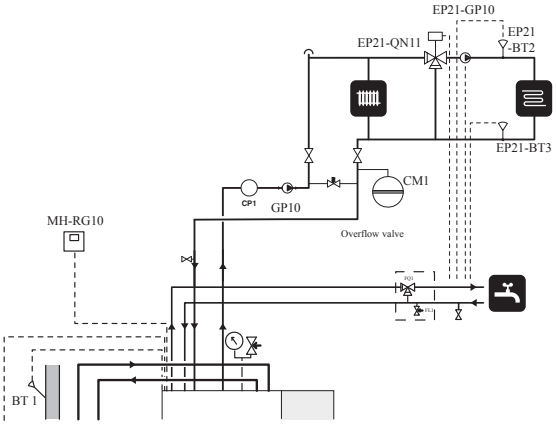

1. Initial settings

Function	Menu No.	Default value	Set value	Check	Remarks
Language	8.1.2	English	___	☐	Language setting used for display
Date	7.1	-	___	☐	
Time	7.2	-	___	☐	

2. Heating settings

Function	Menu No.	Default value	Set value	Check	Remarks
Heating curve	2.1.2	9	___	☐	Target water temperature for radiator
Offset heating	Knob (2.1.1)	0	___	☐	Offset value can be set by the knob in the control panel. Value can be checked in Menu 2.1.1
Min supply heating	2.1.4	25°C	___°C	☐	Adjust the min/max supply temperature according to the required feeding temperature of the emitter in the system.
Max supply heating	2.3	55°C	___°C	☐	
Circ-pump speed heat	2.1.5	100%	___%	☐	Adjust the circulation pump speed setting according to “Setting system flow heating”.
Allow add.heat	8.2.1	Heat	___	☐	Setting whether the electric heater is used for heating.
Period time	8.5.1	60min	___min	☐	These settings decide the operation period of hot water and heating when both demand comes up at the same time. Period time defines a cycle time of hot water and heating operation, and Max time for HW defines the maximum hot water operation time of the period time.
Max time for HW	8.5.2	40min	___min	☐	
Stop temp heating	8.2.3	17°C	___°C	☐	Heating operation is prohibited when the outdoor air temperature exceeds the setting value.
Heating curve 2	3.2	6	___	☐	Target water temperature for under floor heating.
Offset heating 2	3.1	−1	___	☐	Offset value for heating system 2.
Min supply temp 2	3.3	15	___	☐	Min/max supply temperature setting for emitter downstream.
Max supply temp 2	3.4	45	___	☐	
Heating system 2	9.3.4	off	Heating	☐	Heating system 2 becomes active when it is set.

3. Room sensor settings

Function	Menu No.	Default value	Set value	Check	Remarks
Room sensor type	9.3.6	Off	RG10	☐	In case this menu is not shown on the display, set the menu 8.1.1 to “S”.
Heating system	6.2	Off	System1+2	☐	This setting defines which system the adjustment by the room sensor should be valid.

4. Hot water settings

Function	Menu No.	Default value	Set value	Check	Remarks
Start temperature HW	1.2	47°C	___°C	☐	These settings should be adjusted based on the hot water load in the property.
Stop temperature HW	1.3	53°C	___°C	☐	
Extra hot water function	see Item 5			☐	Setting is necessary when user use this function for larger hot water demand or for disinfection.

5. Extra hot water settings (in case it is required)

Function	Menu No.	Default value	Set value	Check	Remarks
Stop temperature XHW	1.4	65°C	___°C	☐	
Heat pump stop XHW	1.5	60°C	___°C	☐	Operable temperature range of the outdoor unit can be set.
Max heat p. time XHW	1.6	30min	___min	☐	Total operable time of heat pump during XHW operation can be set.
XHW Monday - Sunday (Weekly timer based extra hot water setting)	7.4.1 - 7.4.7	00:00-00:00	___	☐	The setting is invalid when start time and stop time is set at the same time (e.g. 22:00 - 22:00)
Interval XHW (Periodic extra hot water setting)	1.7	0days	___days	☐	Interval of the extra hot water operation is set.

3. Single heating application with external heat source

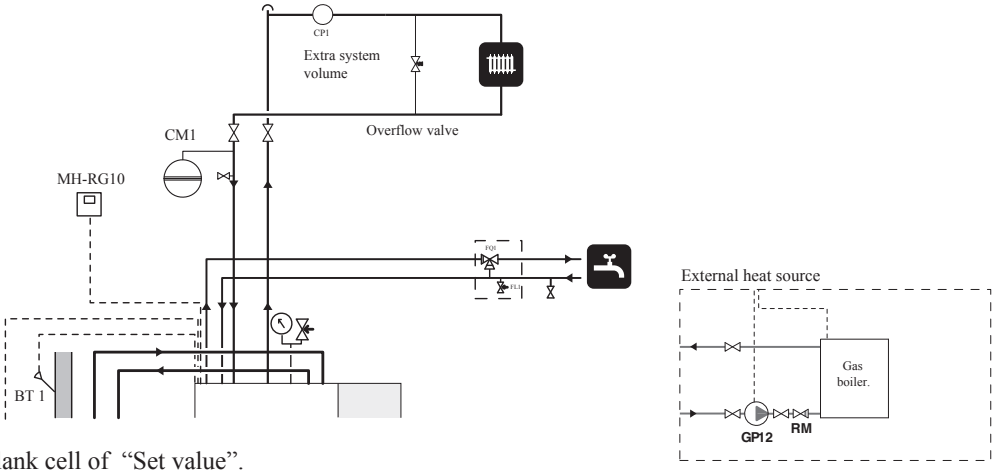

Fill in the altered set value on the blank cell of "Set value".
As for the set value which is already written in the cell, check if the setting is properly changed.

1. Initial settings

Function	Menu No.	Default value	Set value	Check	Remarks
Language	8.1.2	English	___	☐	Language setting used for display
Date	7.1	-	___	☐	
Time	7.2	-	___	☐	

2. Heating settings

Function	Menu No.	Default value	Set value	Check	Remarks
Heating curve	2.1.2	9	___	☐	
Offset heating	Knob (2.1.1)	0	___	☐	Offset value can be set by the knob in the control panel. Value can be checked in Menu 2.1.1
Min supply heating	2.1.4	25°C	___°C	☐	Adjust the min/max supply temperature according to the required feeding temperature of the emitter in the system.
Max supply heating	2.3	55°C	___°C	☐	
Circ-pump speed heat	2.1.5	100%	___%	☐	Adjust the circulation pump speed setting according to "Setting system flow heating".
Allow add.heat	8.2.1	Heat	___	☐	Setting whether the electric heater is used for heating.
Period time	8.5.1	60min	___min	☐	These settings decide the operation period of hot water and heating when both demand comes up at the same time. Period time defines a cycle time of hot water and heating operation, and Max time for HW defines the maximum hot water operation time of the period time.
Max time for HW	8.5.2	40min	___min	☐	
Stop temp heating	8.2.3	17°C	___°C	☐	Heating operation is prohibited when the outdoor air temperature exceeds the setting value.
Add heat type	9.2.8	Internal el.	Ext. 1 step	☐	Make sure the wiring for external heat source.

3. Room sensor settings

Function	Menu No.	Default value	Set value	Check	Remarks
Room sensor type	9.3.6	Off	RG10	☐	In case this menu is not shown on the display, set the menu 8.1.1 to "S".
Heating system	6.2	Off	System1	☐	This setting defines which system the adjustment by the room sensor should be valid.

4. Hot water settings

Function	Menu No.	Default value	Set value	Check	Remarks
Start temperature HW	1.2	47°C	___°C	☐	These settings should be adjusted based on the hot water load in the property.
Stop temperature HW	1.3	53°C	___°C	☐	
Extra hot water function	see Item 5			☐	Setting is necessary when user use this function for larger hot water demand or for disinfection.

5. Extra hot water settings (in case it is required)

Function	Menu No.	Default value	Set value	Check	Remarks
Stop temperature XHW	1.4	65°C	___°C	☐	
Heat pump stop XHW	1.5	60°C	___°C	☐	Operable temperature range of the outdoor unit can be set.
Max heat p. time XHW	1.6	30min	___min	☐	Total operable time of heat pump during XHW operation can be set.
XHW Monday - Sunday (Weekly timer based extra hot water setting)	7.4.1 - 7.4.7	00:00-00:00	___	☐	The setting is invalid when start time and stop time is set at the same time (e.g. 22:00 - 22:00)
Interval XHW (Periodic extra hot water setting)	1.7	0days	___days	☐	Interval of the extra hot water operation is set.

Checklist: Checks before commissioning

Hot water	Notes	Checked
Non-return valve	Is it installed in right direction ?	☐
Safety valve	Is it installed in cold water line ?	☐
Mixer valve	Is it installed in right direction ?	☐
		☐

Heating	Notes	Checked
System volume	Tank _____ ℓ + System _____ ℓ = Total _____ ℓ	☐
Safety valve	Is FL2 installed ?	☐
Expansion vessel	Total system volume × 5% or more _____ ℓ	☐
Internal heater	Permitted/prohibited (Menu 8.2.1)	☐
External heat Source	Yes → Type _____ Setting (Menu 9.2.8) _____ No	☐
Heating system 2	Yes No	☐

Cooling	Notes	Checked
Pipe system, condensation insulation		☐
Reversing valve (QN12)	Is it installed in right direction ?	☐
		☐

Refrigerant system	Notes	Checked
Pipe length (within 12m)	_____ m	☐
Height difference (within 7m)	_____ m	☐
Test pressurization	41.5 bar	☐
Leak tracing		☐
End pressure Evacuation	-1 bar or lower for one hour	☐
		☐

Electrical installation	Notes	Checked
Property's main fuse	3/1 phase _____ A	☐
Group fuse	3/1 phase _____ A	☐
Current limiter/current sensor	Is it installed properly if the power supply is 3 phase ?	☐
		☐

Accessories	Notes	Checked
External circulation pump	Yes/No	☐
Buffer vessel	Yes/No Volume _____ ℓ	☐
Relief valve	Yes/No	☐
Room sensor	Yes/No Type _____ Setting (Menu 9.3.5, 9.3.6, 6.2)	☐
		☐

Control

Control

Display

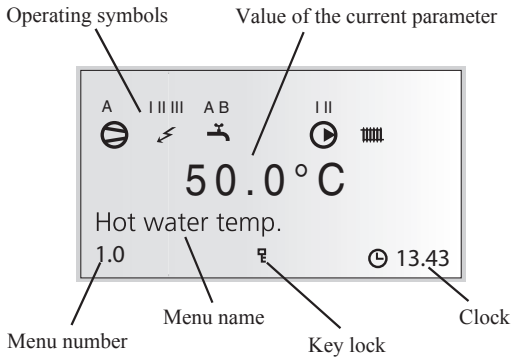

Menu types

Control is classified into different menu types depending on how “deep” into the controls you need to go.

- Normal [N]: The settings you as a customer often need.
- Extended [U]: Shows all detailed menus except the service menus.
- Service [S]: Shows all menus.

Menu management

The Plus button is used to move forward to the next menu on the current menu level and to increase the value of the parameter in menus where this is possible.

The Minus button is used to move back to the previous menu on the current menu level and to decrease the value of the parameter in menus where this is possible.

The Enter button is used to select submenus of the current menu, to permit parameters to be changed and to confirm any changes to parameters. When the menu number ends with a zero this indicates that there is a submenu.

Changing parameters

In order to change a parameter (value):

1. Access the required menu.
2. Press button, the numerical value starts to flash.
3. Increase or decrease using or buttons.
4. Confirm by pressing button.
5. Menu 1.0 is automatically displayed again 30 minutes after the last button is pressed.

Example

Changing the heating curve, Menu 2.1.

1. The starting point is Menu 1.0.
2. Press button to move to Menu 2.0.
3. Press button to move to Menu 2.1.
4. Press button to change the value.
5. Change the value by pressing or buttons.
6. Confirm the selected value by pressing button.
7. Press button to access Menu 1.0.

Menu tree

1.0 [N] Hot water temp.	
1.1 [N] Max HW/Peroid time	
1.2 [N] Start temperature HW	
1.3 [N] Stop temperature HW	
1.4 [U] Stop temperature XHW	
1.5 [U] Heat pump stop XHW	
1.6 [U] Max heat p. time XHW	
1.7 [U] Interval XHW	
1.8 [U] Next XHW action	
1.9 [U] HW run time	
1.10.0 [S] HW charge act/set	1.10.1 [S] HW charge set temp
	1.10.2 [S] Circ-pump speed HW
	1.10.3 [S] Circ-pump manual
	1.10.4 [S] HW reg min
	1.10.5 [S] HW reg P
	1.10.6 [S] HW reg Q
	1.10.7 [S] HW reg sample time
	1.10.8 [S] HW reg xp
	1.10.9 [S] HW reg value for xP
	1.10.10 [S] Return
1.11.0 [S] CompFreq HW settings	1.11.1 [S] CompFreq HW set
	1.11.2 [S] CompFreq manual
	1.11.3 [S] CompFreq at +20
	1.11.4 [S] CompFreq at -5
	1.11.5 [S] Return
1.12 [N] Return	

2.0 [N] Supply temp.

2.1.0 [N] Heating settings	2.1.1 [N] Offset heating/Total	
	2.1.2 [N] Heating curve	
	2.1.3.0 [U] Own heating curve	2.1.3.1 [U] Supply temp.at +20
		2.1.3.2 [U] Supply temp.at -20
		2.1.3.3 [U] Buckling temperature
		2.1.3.4 [U] Supply t. at buckl.
		2.1.3.5 [U] Return
	2.1.4 [U] Min supply heating	
	2.1.5 [U] Circ-pump speed heat	
	2.1.6 [N] Return	
2.2.0 [N] Cooling settings	2.2.1 [N] Offset cooling/Total	
	2.2.2 [N] Cooling curve	
	2.2.3.0 [U] Own cooling curve	2.2.3.1 [U] Supply temp.at +20
		2.2.3.2 [U] Supply temp.at +40
		2.2.3.3 [U] Return
	2.2.4 [U] Min supply cooling	
	2.2.5 [U] Circ-pump speed cool	
	2.2.6 [N] Return	
2.3 [U] Max supply temp.		
2.4 [U] External adjustment		
2.5 [U] Supply/Return temp.		
2.6 [U] Degree minutes		
2.7 [N] Return		

3.0 [N] Supply temp. 2	
3.1 [N] Offset heating/Tot 2	
3.2 [N] Heating curve 2	
3.3 [U] Min supply temp. 2	
3.4 [U] Max supply temp. 2	
3.5 [U] External adjust. 2	
3.6.0 [U] Own heating curve 2	3.6.1 [U] Supply temp.at +20
	3.6.2 [U] Supply temp.at -20
	3.6.3 [U] Buckling temperature
	3.6.4 [U] Supply t. at buckl
	3.6.5 [U] Return
3.7 [U] Supply/Return temp 2	
3.8 [N] Return	

4.0 [N] Outdoor temp.
4.1 [N] Outdoor avg. temp.
4.2 [U] Outdoor filter time
4.3 [U] Outdoor avg. 1min.
4.4 [N] Return

5.0 [N] Heat pump	
5.1 [N] Number of starts	
5.2 [N] Run time compressor	
5.3 [U] Time to start	
5.4 [U] Outdoor temp. Tho-A	
5.5 [U] Heat Ex Tho-R1	
5.6 [U] Heat Ex Tho-R2	
5.7 [U] Suction temp. Tho-S	
5.8 [U] Hot gas Tho-D	
5.9 [U] Liquid line temp.	
5.10 [U] Condensor out / max	
5.11 [U] HP	
5.12 [U] LP LPT	
5.13 [U] Fan speed	
5.14.0 [U] CompFreq act/set	5.14.1 [U] OU current CT
	5.14.2 [U] Inverter temp Tho-IP
	5.14.3 [U] Return
5.15.0 [S] OU communication	5.15.1 [S] Com. error rate
	5.15.2 [S] Com. errors
	5.15.3 [S] Reset com. errors
	5.15.4 [S] Return
5.16 [N] Return	

6.0 [N] Room temperature*
6.1 [U] Room compensation
6.2 [U] Heating system
6.3 [N] Room temp. setpoint
6.4 [U] Room temp avg. 1min
6.5 [U] Room integrator time
6.6 [N] Return

*Requires accessory and activation in Menu 9.3.6.

7.0 [N] Clock	
7.1 [N] Date	
7.2 [N] Time	
7.3.0 [U] Temp set back	7.3.1 [U] Set back time
	7.3.2 [U] Set back temp +/-
	7.3.3 [U] Heating system
	7.3.4 [U] Return
7.4.0 [U] Extra hot water	7.4.1 [U] XHW Monday
	7.4.2 [U] XHW Tuesday
	7.4.3 [U] XHW Wednesday
	7.4.4 [U] XHW Thursday
	7.4.5 [U] XHW Friday
	7.4.6 [U] XHW Saturday
	7.4.7 [U] XHW Sunday
	7.4.8 [U] Return
7.5.0 [U] Vacation set back	7.5.1 [U] Vacation begins
	7.5.2 [U] Vacation ends
	7.5.3 [U] Heating system
	7.5.4 [U] Offset heating curve
	7.5.5 [U] HW off
	7.5.6 [U] Return
7.6 [N] Return	

8.0 [N] Other adjustments	
8.1.0 [N] Display settings	8.1.1 [N] Menu type
	8.1.2 [N] Language
	8.1.3 [N] Display contrast
	8.1.4 [N] Light intensity
	8.1.5 [N] Return
8.2.0 [N] Op. mode settings	8.2.1 [N] Allow add. heat
	8.2.2 [N] Add. heat only
	8.2.3 [U] Stop temp. heating
	8.2.4 [U] Start temp. cooling
	8.2.5 [U] Hysteresis
	8.2.6 [N] Return
8.3.0 [U] Current limiter	8.3.1 [U] Fuse size
	8.3.2 [U] Max. electric power
	8.3.3 [U] Current phase 1
	8.3.4 [U] Current phase 2
	8.3.5 [U] Current phase 3
	8.3.6 [U] Transform. ratio EBV
	8.3.7 [U] Return
8.5.0 [U] Period settings	8.5.1 [U] Period time
	8.5.2 [U] Max time for HW
	8.5.3 [U] Return
8.6 [N] Return	

9.0 [S] Service menus

9.1.0 [S] Heat pump settings	9.1.1 [S] DM start heating	
	9.1.2 [S] DM start cooling	
	9.1.3 [S] Stop Temp. heat low	
	9.1.4 [S] Stop Temp. heat high	
	9.1.5 [S] Stop Temp. cool low	
	9.1.6 [S] Stop Temp. cool high	
	9.1.7 [S] Time bet. starts	
	9.1.8 [S] Min CompFreq act/set	
	9.1.9 [S] Max CompFreq act/set	
	9.1.10 [S] OU cur. heat act/max	
	9.1.11 [S] OU cur. cool act/max	
	9.1.12 [S] Tank defrost Temp.	
	9.1.13 [S] Return	
9.2.0 [S] Add. heat settings	9.2.1 [S] DM start add. heat	
	9.2.2 [S] Time factor	
	9.2.3 [S] Docking type	
	9.2.4 [S] Reg. amplification	
	9.2.5 [S] Reg. integrator time	
	9.2.6 [S] Shunt amplification	
	9.2.7 [S] Shunt amplification2	
	9.2.8 [S] Add. heat type	
	9.2.9 [S] Return	
9.3.0 [S] Operating settings	9.3.1 [S] Max. boiler temp.	
	9.3.2 [S] Logger	
	9.3.3 [S] Cooling system	
	9.3.4 [S] Heating system 2	
	9.3.5 [S] Room unit	
	9.3.6 [S] Room sensor type	
	9.3.7.0 [S] Forced control	9.3.7.1 [S] Forced control
		9.3.7.2 [S] K1
		9.3.7.3 [S] K2
		9.3.7.4 [S] K3
		9.3.7.5 [S] K4
		9.3.7.6 [S] K5
		9.3.7.7 [S] K6
		9.3.7.8 [S] K7
		9.3.7.9 [S] K8
		9.3.7.10 [S] K9
		9.3.7.11 [S] K10
		9.3.7.12 [S] K11
		9.3.7.13 [S] K12
		9.3.7.14 [S] K13
		9.3.7.15 [S] K14
		9.3.7.16 [S] Alarm 1
		9.3.7.17 [S] Alarm 2
		9.3.7.18 [S] Return
	9.3.8 [S] Factory setting	
	9.3.9 [S] Operating state	

9.0 [S] Service menus

	9.3.10.0 [S] Floor drying setting	9.3.10.1 [S] Floor drying
		9.3.10.2 [S] Period time 1
		9.3.10.3 [S] Temp. period 1
		9.3.10.4 [S] Period time 2
		9.3.10.5 [S] Temp. period 2
		9.3.10.6 [S] Return
	9.3.11 [S] Supply pump exer.	
	9.3.12 [S] Supply diff HP	
	9.3.13 [S] Diff HP add. heat	
	9.3.14 [S] Block HW/Heating	
	9.3.15 [S] Heat drop at alarm	
	9.3.16 [S] Type of HW sensor	
	9.3.17 [S] Freeze protection HX	
	9.3.18 [S] Return	
9.4 [S] Quick start		
9.5.0 [S] System info	9.5.1 [S] Heat pump type	
	9.5.2 [S] Cpu usage percent	
	9.5.3 [S] Com rate/1000	
	9.5.4 [S] Unit w. com. problem	
	9.5.5 [S] Run time add. heat	
	9.5.6 [S] Run time hot water	
	9.5.7 [S] Program version	
	9.5.8 [S] 106-card version	
	9.5.9 [S] Display version	
	9.5.10 [S] Relay card version	
	9.5.11 [S] Lowest supply temp.	
	9.5.12 [S] Percent runtime	
	9.5.13 [S] Period	
	9.5.14 [S] Run status	
	9.5.15 [S] Run status last	
	9.5.16 [S] Run status time	
	9.5.17 [S] Return	
9.6.0 [S] Heat reg. settings	9.6.1 [S] CompFreq	
	9.6.2 [S] Manual CompFreq	
	9.6.3 [S] Max deltaF	
	9.6.4 [S] CompFreq regP	
	9.6.5 [S] Time min freq start	
	9.6.6 [S] Time min freq heat	
	9.6.7 [S] Max diff flow-cFlow	
	9.6.8 [S] CompFreq GMz	
	9.6.9 [S] Return	
9.7 [S] Reset alarm		
9.8.0 [S] Alarm log	9.8.1.0 [S] Log 1	9.8.x.1 [S] Time
		9.8.x.2 [S] Alarm type
		9.8.x.3 [S] Run status
		9.8.x.4 [S] Run status last
		9.8.x.5 [S] Run status time

9.0 [S] Service menus

		9.8.x.6 [S] Run time compressor
		9.8.x.7 [S] Outdoor avg. 1min.
		9.8.x.8 [S] Outdoor temp Tho-A
		9.8.x.9 [S] Supply/Return temp
		9.8.x.10 [S] Condensor out
		9.8.x.11 [S] Hot water temp.
		9.8.x.12 [S] CompFreq act/set
		9.8.x.13 [S] Heat Ex Tho-R1
		9.8.x.14 [S] Heat Ex Tho-R2
		9.8.x.15 [S] Suction temp. Tho-S
		9.8.x.16 [S] Hot gas Tho-D
		9.8.x.17 [S] Liquid line temp.
		9.8.x.18 [S] HP
		9.8.x.19 [S] LP LPT
		9.8.x.20 [S] OU current CT
		9.8.x.21 [S] Inverter temp Tho-IP
		9.8.x.22 [S] Circ-pump speed
		9.8.x.23 [S] Relay status 1-8
		9.8.x.24 [S] Relay status 9-14
		9.8.x.25 [S] Program status 1-8
		9.8.x.26 [S] Program status 9-16
		9.8.x.27 [S] Return
	9.8.2.0 [S] Log 2	
	9.8.3.0 [S] Log 3	
	9.8.4.0 [S] Log 4	
	9.8.5 [S] Clear alarm log	
	9.8.6 [S] Return	
9.9 [S] Return		

Main menus

Menu 1.0 [N] Hot water temp.

The current hot water temperature in the vessel is shown here.

Figure on left shows the one in the middle and right one in brackets shows the one on the bottom.

Menu 2.0 [N] Supply temp.

The current supply temperature for the heating system is shown here with the calculated supply temperature in brackets.

Menu 3.0 [N] Supply temp. 2

The current supply temperature for heating system 2 is shown here with the calculated supply temperature in brackets.

Menu 4.0 [N] Outdoor temp.

The current outdoor air temperature is displayed here.

Menu 5.0 [N] Heat pump

The outdoor operation data are shown in the sub-menus to this menu.

The following text appears in the display

Text	Means
Off	Shown when there is no compressor demand and none of the following apply.
On	Shown during normal operation with the compressor.
Initiates	Shown while the compressor is running.
Com. problem	Shown in the event of temporary communication problems.
Defrosting	Shown during defrost.
Oil return	Shown when the compressor is rotated to be lubricated.
Protection	Shown when the compressor is in some form of protection or during a start delay of 30 minutes.
Shutdown	Shown in the event of an alarm, tariff B or Operating mode Addition only.
Stopped	Shown when the outdoor temperature is outside the compressor's working range (too high or too low temperature).

Menu 6.0 [N] Room temperature

The room temperature is shown here and the set room temperature in brackets. The factor for the room sensor and heating system to control are set in the sub-menus to this menu.

Menu 7.0 [N] Clock

The date and time are set in the submenus of this menu. Different temperature reductions and increases at selected times are also set from this menu.

Menu 8.0 [N] Other adjustments

The menu type, language, operating mode settings and load monitor reading are set in the sub-menus to this menu.

Menu 9.0 [S] Service menus

This menu and its sub-menus are only shown on the display screen when access has been selected in Menu 8.1.1.

Values can be read and various settings can be made from these sub-menus.

NOTE! These settings should only be made by persons with the necessary expertise.

[N] Normal, covers the normal user's needs.

[U] Extended, shows all menus except the service menus.

[S] Service, shows all menus, returns to normal 30 minutes after the last button was pressed.

1.0 [N] Hot water temp.

Menu 1.1 [N] Max HW/Period time

The time of the hot water period and the time for the whole period are shown here. Whole period is shown in brackets. Shown for both hot water charging and heating when necessary:

Time for Heating (Max.) when heating is in progress.

Time for Hot water (Max.) if hot water charging is in progress.

Menu 1.2 [N] Start temperature HW

The temperature when the heat pump starts hot water charging is set here.

Setting range: 25 – 55 °C

Default value: 47 °C

Menu 1.3 [N] Stop temperature HW

The temperature when the heat pump stops hot water charging is set here.

Setting range: 30 – 60 °C

Default value: 53 °C

Menu 1.4 [U] Stop temperature XHW

The desired temperature during extra hot water is set here.

Setting range: 40 – 65 °C

Default value: 65 °C

Menu 1.5 [U] Heat pump stop XHW

The desired stop temperature during extra hot water for the heat pump is set here.

Setting range: 40 – 60 °C

Default value: 60 °C

Menu 1.6 [U] Max heat p. time XHW

Here you select the maximum amount of time the heat pump can charge hot water for during extra hot water.

Setting range: 0 – 60 min

Default value: 50 min

Menu 1.7 [U] Interval XHW

Periodic time based extra hot water is selected here.

Extra hot water is shut off at the value “Off”. Extra hot water is started when the value is confirmed.

Setting range: 0 – 90 days

Default value: Off

Menu 1.8 [U] Next XHW action

Time to the next periodic Extra hot water operation is level shown here.

Menu 1.9 [U] HW run time

Shows how long hot water charging with the compressor has been in progress (accumulated).

Menu 1.10.0 [S] HW charge act/set

Shows the actual and target values for the hot water charging temperature.

Hot water charging settings are made in the sub-menus for this menu.

Menu 1.10.1 [S] HW charge set temp

Actual target supply temperature during hot water operation can be set.

Target supply temperature is set at 1.3 Stop temperature HW plus the set value in this menu.

Setting range: 0 – 10 °C

Default value: 2.0 °C

Menu 1.10.2 [S] Circ-pump speed HW

The speed of the heating medium pump during hot water charging is shown here.

Menu 1.10.3 [S] Circ-pump manual

Select “On” to manually control the HW pump.

Setting range: Off, On

Default value: Off

Menu 1.10.4 [S] HW reg min

Here you select the control signal that the heating medium pump is to start at.

Setting range: 1 – 50

Default value: 1

Menu 1.10.5 [S] HW reg P

P part for the HW pump regulator is selected here.

Setting range: 0 – 127

	HMA100	HMS140
Default value	14	10

Menu 1.10.6 [S] HW reg Q

Q part for the HW pump regulator is selected here.

Setting range: 0 – 127

Default value: 110

Menu 1.10.7 [S] HW reg sample time

The sample time for hot water charging is set here.

Setting range: 1 – 30

Default value: 5

Menu 1.10.8 [S] HW reg xP

Here you select the extra amplification that the HW pump regulator is to use below the breaking point.

Setting range: 1.0 – 10.0

Default value: 2.5

Menu 1.10.9 [S] HW reg value for xP

Here you select the breaking point when the flow is no longer linear to the control signal in the heating medium pump.

Setting range: 1 – 100

Default value: 40

Menu 1.10.10 [S] Return

Return to Menu 1.10.0.

Menu 1.11.0 [S] CompFreq HW settings

The compressor frequency during hot water charging is shown here.

Settings can be made regarding the compressor frequency during hot water charging in the submenus to this menu.

Menu 1.11.1 [S] CompFreq HW set

Here you select the compressor frequency for hot water charging during manual control.

This setting is valid only when “On” is selected in Menu 1.11.2.

	FDCW71	FDCW100	FDCW140
Setting range (Hz)	20 – 118	25 – 85	20 – 120
Default value (Hz)	–	–	–

Menu 1.11.2 [S] CompFreq manual

Select “On” to control the compressor frequency for hot water charging manually.

Setting range: Off, On

Default value: Off

Menu 1.11.3 [S] CompFreq at +20

The compressor frequency for hot water charging at an outdoor air temperature of 20 °C is selected here.

	FDCW71	FDCW100	FDCW140
Setting range (Hz)	20 – 118	25 – 85	20 – 120
Default value (Hz)	60	40	60

Menu 1.11.4 [S] CompFreq at -5

The compressor frequency for hot water charging at an outdoor air temperature of -5 °C is selected here.

	FDCW71	FDCW100	FDCW140
Setting range (Hz)	20 – 118	25 – 85	20 – 120
Default value (Hz)	100	80	100

Menu 1.11.5 [S] Return

Return to Menu 1.11.0.

Menu 1.12 [N] Return

Return to Menu 1.0.

2.0 [N] Supply temp.

Menu 2.1.0 [N] Heating settings

Heating settings are made in the sub-menus for this menu.

Menu 2.1.1 [N] Offset heating/Total

The selected heating curve offset is shown here.

The total offset of the heat curve is also shown here. It include schedule, outer compensation and any room control.

Note! The value is changed using the “Heating curve offset” knob.

Setting range: -10 – 10

Menu 2.1.2 [N] Heating curve

The selected heating curve is shown here. At value 0, the function “Own heat curve” is activated, see Menu 2.1.3.0.

Setting range: 0 – 20

Default value: 9

Menu 2.1.3.0 [U] Own heating curve

Here you can select your own curve definition. This is an individual linear curve with one break point. You select a break point and the associated temperatures.

Note! The “Heating curve” in Menu 2.1.2 must be set to 0 to activate this function.

Menu 2.1.3.1 [U] Supply temp.at +20

The supply temperature at an outdoor air temperature of +20 °C is selected here.

Setting range: 0 – 80* °C

Default value: 20 °C

* Limited by Menu 2.3 Max supply temp.

Menu 2.1.3.2 [U] Supply temp.at -20

The supply temperature at an outdoor air temperature of -20 °C is selected here.

Setting range: 0 – 80* °C

Default value: 35 °C

* Limited by Menu 2.3 Max supply temp.

Menu 2.1.3.3 [U] Buckling temperature

Here you select at what outside air temperature the break point shall occur.

Setting range: -15 – 15 °C

Default value: 0 °C

Menu 2.1.3.4 [U] Supply t. at buckl.

You set the calculated supply temperature for the break point here.

Setting range: 0 – 80* °C

Default value: 30 °C

* Limited by Menu 2.3 Max supply temp.

Menu 2.1.3.5 [U] Return

Return to Menu 2.1.3.0.

Menu 2.1.4 [U] Min supply heating

The set minimum level for the supply temperature to the heating system is shown here.

The calculated flow temperature never drops below the set level irrespective of the outdoor temperature, heating curve or its offset heating curve.

Setting range: 20 – 65 °C

Default value: 25 °C

Menu 2.1.5 [U] Circ-pump speed heat

The speed of the circulation pump during space heating is selected here.

Setting range: 1 – 100

Default value: 100

Menu 2.1.6 [N] Return

Return to Menu 2.1.0.

Menu 2.2.0 [N] Cooling settings

Cooling settings are made in the sub-menus for this menu.

Menu 2.2.1 [N] Offset cooling/Total

The selected cooling curve offset is changed here.

The total offset of the cooling curve is also shown here. It includes schedule, outer compensation and any room control.

Setting range: -10 – 10

Default value: -1

Menu 2.2.2 [N] Cooling curve

The selected cooling curve is shown here. At value 0, the function “Own cooling curve” is activated, see Menu 2.2.3.0.

Setting range: 0 – 3

Default value: 1

Menu 2.2.3.0 [U] Own cooling curve

Here you can select your own curve definition.

Note! The cooling curve in Menu 2.2.2 must be set to 0 to activate this function.

Menu 2.2.3.1 [U] Supply temp.at +20

The supply temperature at an outdoor air temperature of +20 °C is selected here.

Setting range: 0 – 80* °C

Default value: 20 °C

* Limited by Menu 2.2.4 Min. supply cooling.

Menu 2.2.3.2 [U] Supply temp.at +40

The supply temperature at an outdoor air temperature of +40 °C is selected here.

Setting range: 0 – 80* °C

Default value: 10 °C

* Limited by Menu 2.2.4 Min. supply cooling.

Menu 2.2.3.3 [U] Return

Return to Menu 2.2.3.0.

Menu 2.2.4 [N] Min supply cooling

The set minimum level for the supply temperature to the cooling system is shown here.

The calculated flow temperature never drops below the set level irrespective of the outdoor temperature, cooling curve or its offset.

	HMA100	HMS140
Setting range (°C)	7 – 25	18 – 25
Default value (°C)	10	18

Menu 2.2.5 [N] Circ-pump speed cool

The speed of the circulation pump during cooling is selected here.

Setting range: 1 – 100

Default value: 100

Menu 2.2.6 [N] Return

Return to Menu 2.2.0.

Menu 2.3 [U] Max supply temp.

The set maximum level for the supply temperature to the heating system is shown here.

The calculated flow temperature never exceeds the set level irrespective of the outdoor temperature, heating curve or offset heating curve.

Setting range: 25 – 65 °C

Default value: 55 °C

Menu 2.4 [U] External adjustment

Connecting an external contact, for example, a room thermostat (accessory) or a timer allows you to temporarily or periodically raise or lower the room temperature. When the external contact is closed, the heating curve offset or cooling curve offset is changed by the number of steps shown here.

If room control is active there is a degree change to the set room temperature.

Setting range: -10 – 10

Default value: 0

Menu 2.5 [U] Supply/Return temp.

The current supply and return line temperatures are shown here. Return temperature is shown in brackets.

Menu 2.6 [U] Degree minutes

Current value for number of degree-minutes. In addition, this value can be changed to accelerate the start of heating production or cooling.

Setting range: -32000 – 32000

Default value: 0

Menu 2.7 [N] Return

Return to Menu 2.0.

3.0 [N] Supply temp. 2

Menu 3.1 [N] Offset heating/Tot 2

The heating curve offset 2 is selected here.

The total offset of heat curve 2 is also shown here. It includes schedule, outer compensation and any room control.

Setting range: -10 – 10

Default value: -1

Menu 3.2 [N] Heating curve 2

The selected heating curve is shown here. At value 0, the function “Own heat curve 2” is activated, see Menu 3.6.0.

Setting range: 0 – 20

Default value: 6

Menu 3.3 [U] Min supply temp. 2

The set minimum level for the supply temperature for heating system 2 is shown here.

The calculated flow temperature never drops below the set level irrespective of the outdoor temperature, heating curve or its offset.

Setting range: 10 – 65 °C

Default value: 15 °C

Menu 3.4 [U] Max supply temp. 2

The set maximum level for the supply temperature for heating system 2 is shown here.

The calculated flow temperature never exceeds the set level irrespective of the outdoor temperature, heating curve or its offset.

Setting range: 10 – 65 °C

Default value: 45 °C

Menu 3.5 [U] External adjust. 2

Connecting an external contact, for example, a room thermostat (accessory) or a timer allows you to temporarily or periodically raise or lower the room temperature. When the external contact is closed, the heating curve offset or the cooling curve offset is changed by the number of steps shown here.

If room control is active there is a degree change to the set room temperature.

Setting range: -10 – 10

Default value: 0

Menu 3.6.0 [U] Own heating curve 2

Here you can select your own curve definition. This is an individual linear curve with one break point. You select a break point and the associated temperatures.

Note! The “Heating curve” in Menu 3.2 must be set to 0 to activate this function.

Menu 3.6.1 [U] Supply temp.at +20

The supply temperature at an outdoor air temperature of +20 °C is selected here.

Setting range: 0 – 80* °C

Default value: 20 °C

* Limited by Menu 3.4 Max supply temp. 2.

Menu 3.6.2 [U] Supply temp.at -20

The supply temperature at an outdoor air temperature of -20 °C is selected here.

Setting range: 0 – 80* °C

Default value: 35 °C

* Limited by Menu 3.4 Max supply temp. 2.

Menu 3.6.3 [U] Buckling temperature

Here you select at what outside air temperature the break point shall occur.

Setting range: -15 – 15 °C

Default value: 0 °C

Menu 3.6.4 [U] Supply t. at buckl

You set the calculated supply temperature for the break point here.

Setting range: 0 – 80* °C

Default value: 30 °C

* Limited by Menu 3.4 Max supply temp. 2.

Menu 3.6.5 [U] Return

Return to Menu 3.6.0.

Menu 3.7 [U] Supply/Return temp 2

The present supply and return temperatures for heating system 2 are shown here. Return temperature is shown in brackets.

Menu 3.8 [N] Return

Return to Menu 3.0.

4.0 [N] Outdoor temp.

Menu 4.1 [N] Outdoor avg. temp.

This menu shows the average outdoor temperature according to the set value in Menu 4.2 (factory setting: 24h).

Menu 4.2 [U] Outdoor filter time

Here you select during how long the average temperature in Menu 4.1 is calculated.

Setting range: 1 min, 10 min, 1h, 2h, 4h, 6h, 12h, 24h

Default value: 24h

Menu 4.3 [U] Outdoor avg. 1min.

Shows the average outdoor temperature over the last minute.

Menu 4.4 [N] Return

Return to Menu 4.0.

5.0 [N] Heat pump

Menu 5.1 [N] Number of starts

The accumulated number of starts with the compressor in outdoor unit is shown here.

Menu 5.2 [N] Run time compressor

The accumulated time that the compressor has been used in outdoor unit is shown here.

Menu 5.3 [U] Time to start

Time until the compressor start in outdoor unit is shown in this menu.

Menu 5.4 [U] Outdoor temp. Tho-A

This menu shows the outdoor air temperature that the heat pump measures.

Menu 5.5 [U] Heat Ex Tho-R1

This menu shows the evaporator temperature in the heat pump at sensor Tho-R1.

Menu 5.6 [U] Heat Ex Tho-R2

This menu shows the evaporator temperature in the heat pump at sensor Tho-R2.

Menu 5.7 [U] Suction temp. Tho-S

This menu shows the suction gas temperature in the heat pump.

Menu 5.8 [U] Hot gas Tho-D

This menu shows the hotgas temperature in the heat pump.

Menu 5.9 [U] Liquid line temp.

This menu shows the liquid line temperature in the heat pump.

Menu 5.10 [U] Condensor out / max

Shows the current and max. allowed temperature after the condenser.

Menu 5.11 [U] HP

The current high pressure and corresponding temperature during heating are shown here. During cooling, the actual low pressure and corresponding temperature are shown.

Menu 5.12 [U] LP LPT

The current low pressure is shown here.

Menu 5.13 [U] Fan speed

The fan speed is shown here.

Menu 5.14.0 [U] CompFreq act/set

The actual and set point value for the compressor frequency are shown here.

Menu 5.14.1 [U] OU current CT

The present phase current to outdoor unit is shown here.

Menu 5.14.2 [U] Inverter temp Tho-IP

The current inverter temperature is shown here.

Menu 5.14.3 [U] Return

Return to Menu 5.14.0.

Menu 5.15.0 [S] OU communication

Readings regarding any communication errors can be made in the sub-menus to this menu.

Menu 5.15.1 [S] Com. error rate

Shows the percentage of incorrect communications with outdoor unit since start-up.

Menu 5.15.2 [S] Com. errors

Shows the total number of incorrect communications with outdoor unit since start-up.

Menu 5.15.3 [S] Reset com. errors

Select “Yes” here to reset the counters in menu 5.15.1 and 5.15.2. The settings returns to “No” once the action has been carried out.

Setting range: Yes, No

Menu 5.15.4 [S] Return

Return to Menu 5.15.0.

Menu 5.16 [N] Return

Return to Menu 5.0.

6.0 [N] Room temperature*

*Requires accessory and activation in Menu 9.3.6.

Menu 6.1 [U] Room compensation

A factor is selected here that determines how much the calculated supply temperature is affected by the difference between the room temperature and the set room temperature. A higher value gives a greater change.

Setting range: 0 – 10.0

Default value: 2.0

Menu 6.2 [U] Heating system

You select here whether the room sensor is Valid for heating system 1 (menu 2.0) and/or heating system 2 (menu 3.0).

Setting range: Off, System 1, System 2, System 1+2

Default value: Off

Menu 6.3 [N] Room temp. setpoint

The desired room temperature is shown here.

Setting range: 10 – 30 °C

Menu 6.4 [U] Room temp avg. 1min

Shows the average room temperature over the last minute.

Menu 6.5 [U] Room integrator time

Select the integration time for room control here.

Setting range: 0 – 120

Default value: Off

Menu 6.6 [N] Return

Return to Menu 6.0.

7.0 [N] Clock

Menu 7.1 [N] Date

The current date is set here.

Menu 7.2 [N] Time

Here the current time is set.

Menu 7.3.0 [U] Temp set back

Settings, e.g. for night reduction can be selected in the submenus to this menu.

Menu 7.3.1 [U] Set back time

The time for the set back operation, e.g. night reduction is chosen here.

Menu 7.3.2 [U] Set back temp +/-

Changes of the heat curve during set back operation period, e.g. the night reduction is set here.

Setting range: -10 – 10

Default value: 0

Menu 7.3.3 [U] Heating system

The heating system to apply the set back operation is selected here. If heating system 2 is present the menu can be set to “Off”, “System 1”, “System 2” or “System 1+2”. In other cases only “Off” and “System 1” can be selected.

Setting range: Off, System 1, System 2, System 1+2

Default value: Off

Menu 7.3.4 [U] Return

Return to Menu 7.3.0.

Menu 7.4.0 [U] Extra hot water

Settings are made in the sub-menus of this menu when extra hot water is required on a specific day.

Menu 7.4.1 – 7.4.7 [U] XHW Monday – XHW Sunday

Here you select the period for respective days when extra hot water should be activated. Hours and minutes for both start and stop are shown. Equal values mean that extra hot water is not activated. Time can be set past midnight.

Setting range: 00:00 – 23:45

Default value: 00:00 – 00:00

Menu 7.4.8 [U] Return

Return to Menu 7.4.0.

Menu 7.5.0 [U] Vacation set back

Holiday settings are made in the sub-menus to this menu.

When the holiday function is active, the calculated supply line temperature is reduced according to the setting and hot water charging can be switched off.

When the holiday function is deactivated, the heat pump operates hot water for an hour, before periodic extra hot water is activated (even if periodic extra hot water is actived in Menu 1.7).

Note! The holiday setting does not deactive cooling.

Menu 7.5.1 [U] Vacation begins

The start date for holiday changing is set here. The date is changed by pressing the enter button. The holiday change starts applying at 00:00 on the selected date.

Same date in Menu 7.5.1 and 7.5.2 deactivates the holiday function.

Menu 7.5.2 [U] Vacation ends

The end date for holiday changing is set here. The date is changed by pressing the enter button. The holiday change stops applying at 23:59 on the selected date.

Same date in Menu 7.5.1 and 7.5.2 deactivates the holiday function.

Menu 7.5.3 [U] Heating system

The heating system to apply the Vacation set back is selected here. If heating system 2 is present the menu can be set to “Off”, “System 1”, “System 2” or “System 1+2”. In other cases only “Off” and “System 1” can be selected.

Setting range: Off, System 1, System 2, System 1+2

Default value: Off

Menu 7.5.4 [U] Offset heating curve

How much the heating curve is to be offset during the holiday period is set here.

If the relevant heating system has a room sensor, the change is given in degrees.

Setting range: -10 – 10

Default value: -5

Menu 7.5.5 [U] HW off

You can choose if hot water operation is cancelled during the holiday period

Setting range: No, Yes

Default value: Yes

Menu 7.5.6 [U] Return

Return to Menu 7.5.0.

Menu 7.6 [N] Return

Return to Menu 7.0.

8.0 [N] Other adjustments

Menu 8.1.0 [N] Display settings

Settings concerning language and menu type are set in the sub-menus to this menu.

Menu 8.1.1 [N] Menu type

The menu type is chosen here.

[N] Normal, covers the normal user's needs.

[U] Extended, shows all menus except the service menus.

[S] Service, shows all menus, returns to normal menu level 30 minutes after the last button was pressed.

NOTE

Incorrect settings in the service menus can damage the property and/or heat pump.

Setting range: N, U, S

Default value: N

Menu 8.1.2 [N] Language

Language settings are made here.

Menu 8.1.3 [U] Display contrast

The display's contrast is set here.

Setting range: 0 – 31

Default value: 0

Menu 8.1.4 [U] Light intensity

The light intensity in idle mode is set here. Idle mode starts 30 minutes after the last button was pushed.

Setting range: 0=off, 1=low, 2=average.

Default value: 2

Menu 8.1.5 [N] Return

Return to Menu 8.1.0.

Menu 8.2.0 [N] Op. mode settings

Settings regarding auto mode can be made in the sub-menus to this menu.

Menu 8.2.1 [N] Allow add. heat

At which operating mode the electric heater is to be permitted to produce hot water and heat when needed is selected here.

Setting range: Off, Heating, Heating + Cooling, Cooling

Default values: Heating

Menu 8.2.2 [N] Add. heat mode

Selected if electric heater only is to be used to produce hot water and heat.

Setting range: Off, On

Default value: Off

Menu 8.2.3 [U] Stop temp. heating

The average outdoor air temperature at which the heat pump (in auto mode) is to stop heat production.

When the average outdoor air temperature falls below Stop temp. heating – Hysteresis (Menu 8.2.5) heating starts again.

Setting range: 1 – 43 °C

Default value: 17 °C

Menu 8.2.4 [U] Start temp. cooling

The average outdoor air temperature at which the heat pump (in autoC mode) is to start cooling.

When the average outdoor temperature exceed it, cooling starts.

When the average outdoor air temperature falls below Start temp. cooling – Hysteresis (Menu 8.2.5) cooling stops.

Setting range: 10 – 43* °C

Default value: 25 °C

* Operable temperature range is 15 – 43 °C.

Menu 8.2.5 [U] Hysteresis

See Menu 8.2.3 and Menu 8.2.4. Also affects control with room sensor.

Setting range: 0.5 – 5.0

Default value: 1.0

Menu 8.2.6 [N] Return

Return to Menu 8.2.0.

Menu 8.3.0 [U] Current limiter

Settings and readings regarding the load monitor are set in the sub-menus to this menu.

Menu 8.3.1 [U] Fuse size

The setting selected on the PCB (AA22) switch (R24) is shown here.

Menu 8.3.2 [U] Max. electric power

The setting selected on the PCB (AA22) switch (R25) is shown here.

Menu 8.3.3 [U] Current phase 1

Measured current from phase 1 shown here. If the value falls below 2.8 A "low" is displayed.

Menu 8.3.4 [U] Current phase 2

Measured current from phase 2 shown here. If the value falls below 2.8 A "low" is displayed.

Menu 8.3.5 [U] Current phase 3

Measured current from phase 3 shown here. If the value falls below 2.8 A "low" is displayed.

Menu 8.3.6 [U] Transform. ratio EBV

The transfer value must be defined depending on the current transformers used for the PCB.

Setting range: 100 – 1250

Default value: 300

Menu 8.3.7 [U] Return

Return to Menu 8.3.0.

Menu 8.5.0 [U] Period settings

Time periods for heating and hot water production are set in the sub-menus for this menu.

Menu 8.5.1 [U] Period time

You can set the length of cycle time for water production and heating in case there is demand for both.

Setting range: 5 – 60 min

Default value: 60 min

Menu 8.5.2 [U] Max time for HW

Here you select operation period for hot water of the period time. (8.5.1)

Setting range: 0 – 60 min

Default value: 40 min

Menu 8.5.3 [U] Return

Return to Menu 8.5.0.

Menu 8.6 [N] Return

Return to Menu 8.0.

9.0 [S] Service menus

Menu 9.1.0 [S] Heat pump settings

Settings for outdoor unit are made in the sub-menus to this menu.

Menu 9.1.1 [S] DM start heating

Degree minute setting for start of heat pump, heating.

Setting range: -120 – 0

Default value: -60

Menu 9.1.2 [S] DM start cooling

Degree minute setting for start of heat pump, cooling.

Setting range: 0 – 120

Default value: 60

Menu 9.1.3 [S] Stop Temp. heat low

Lowest limit of the heat pump's working range during heating. It stops below this outdoor air temperature.

The heat pump is permitted to start again when the outdoor air temperature increases by two degrees above the set value.

Setting range: -25 – 43 °C

Default value: -25 °C

Menu 9.1.4 [S] Stop Temp. heat high

Highest limit of the heat pump's working range during heating. It stops above this outdoor air temperature.

The heat pump is permitted to start again when the outdoor air temperature decreases by two degrees below the set value.

Setting range: -25 – 43 °C

Default value: 43 °C

Menu 9.1.5 [S] Stop temp. cool low

Lowest limit of the heat pump's working range during cooling. It stops below this outdoor air temperature.

The heat pump is permitted to start again when the outdoor air temperature increases by two degrees above the set value.

Setting range: 10 – 43 °C

Default value: 10 °C

Menu 9.1.6 [S] Stop temp. cool high

Highest limit of the heat pump's working range during cooling. It stops above this outdoor air temperature.

The heat pump is permitted to start again when the outdoor air temperature decreases by two degrees below the set value.

Setting range: 10 – 43 °C

Default value: 43 °C

Menu 9.1.7 [S] Time bet. starts

Minimum time interval in minutes between compressor starts in the heat pump.

Setting range: 0 – 60 min

Default value: 0 min

Menu 9.1.8 [S] Min CompFreq act/set

Select the min compressor frequency here. Both actual and set values are shown.

	FDCW71	FDCW100	FDCW140
Setting range (Hz)	20 – 86	20 – 80	20 – 77
Default value (Hz)	20	20	20

Menu 9.1.9 [S] Max CompFreq act/set

Select here the max limit for the compressor. Both actual and set values are shown.

	FDCW71	FDCW100	FDCW140
Setting range (Hz)	20 – 118	25 – 85	20 – 120
Default value (Hz)	118	85	120

Menu 9.1.10 [S] OU Cur. heat act/max

The phase current to outdoor unit is shown and the highest permitted current in heating mode can be set here.

	FDCW71	FDCW100	FDCW140
Setting range (Hz)	TBD	7 – 17	7 – 25
Default value (Hz)	TBD	15	24

Menu 9.1.11 [S] OU Cur. cool act/max

The phase current to outdoor unit is shown and the highest permitted current in cooling mode can be set here.

	FDCW71	FDCW100	FDCW140
Setting range (A)	TBD	7 – 17	7 – 23
Default value (A)	TBD	15	22

Menu 9.1.12 [S] Tank defrost Temp.

If the system is colder than the set value during defrosting, connecting to HW. If HW is colder, the electric heater starts.

Menu 9.1.13 [S] Return

Return to Menu 9.1.0.

Menu 9.2.0 [S] Add. heat settings

Settings regarding additional heat, shunt in HM 270V and any extra shunt can be made in the sub-menus to this menu.

Menu 9.2.1 [S] DM start add. heat

The degree minute deficit to activate additional heat supply is set here.

Setting range: -1000 – -30

Default value: -400

Menu 9.2.2 [S] Time factor

The time factor of the immersion heater since first start up is shown here. The value is saved and is not reset even when the boiler is switched off using the main power switch.

Menu 9.2.3 [S] Docking type

No function.

Menu 9.2.4 [S] Reg. amplification

P section for additional heat control.

Setting range: 0 – 10.0

Default value: 1.5

Menu 9.2.5 [S] Reg. integrator time

I section for additional heat control.

Setting range: 5 – 60

Default value: 10

Menu 9.2.6 [S] Shunt amplification

Applies to shunt 1 (QN11). E.g. 2 degrees difference and 2 in amplification gives 4 sec/min controlling the shunt.

Setting range: 0.1 – 5.0

Default value: 1.0

Menu 9.2.7 [S] Shunt amplification2

Applies to any heating system 2 (accessory required). E.g. 2 degrees difference and 2 in amplification gives 4 sec/min controlling the shunt. This function compensates for the speed variation found on different shunt motors that may be installed.

Setting range: 0.1 – 5.0

Default value: 1.0

Menu 9.2.8 [S] Add. heat type

Select the type of additional heat source to be used.

Setting range: Internal power, Ext. 1 step, Ext. Lin 3, Ext. Bin 3, Internal power 2

Default value: Internal power (other models)
Internal power 2 (HMA100VM)

Menu 9.2.9 [S] Return

Return to Menu 9.2.0.

Menu 9.3.0 [S] Operating settings

Settings regarding accessories, additional heat operation, floor drying and a return to the factory settings can be made in the sub-menus to this menu.

Menu 9.3.1 [S] Max. boiler temp.

The setting selected on the PCB (AA22) knob (R26) is shown here.

Menu 9.3.2 [S] Logger

Select “On” here if logger is installed.

Setting range: Off, On

Default value: Off

Menu 9.3.3 [S] Cooling system

Select “On” if cooling system is installed (accessory required).

Setting range: Off, On

Default value: Off

Menu 9.3.4 [S] Heating system 2

Usage of heating system 2 is defined in this menu. If “Off” is selected in Menu 9.3.3 only “Off” or “Heat” can be selected (accessory required).

Setting range: Off, Heating, Heating + Cooling, Cooling

Default value: Off

Menu 9.3.5 [S] Room unit

Here you select whether the Room unit is to be activated or not (accessory required).

Setting range: Off, On

Default value: Off

Menu 9.3.6 [S] Room sensor type

Room sensor type is selected here. Menu 6.0 can be accessed if other than “Off” is chosen.

Setting range: Off, RG10

Default value: Off

Menu 9.3.7.0 [S] Forced control

Settings regarding forced control of the relays in the heat pump are made from the sub-menus in this menu.

Menu 9.3.7.1 [S] Forced control

When “On” is selected in this menu, the user temporarily takes control of the relays in the heat pump. The setting automatically returns to “Off”, 30 minutes after the last button was pushed or after a restart.

Setting range: Off, On

Default value: Off

Menu 9.3.7.2 – 9.3.7.15 [S] K1 – K14

Here you can select manual control of the relays.

Setting range: Off, On, Auto

Default value: Auto

Menu 9.3.7.16 [S] Alarm 1

Here you can select manual test of alarm relay 1.

Setting range: Off, On, Auto

Default value: Auto

Menu 9.3.7.17 [S] Alarm 2

Here you can select manual test of alarm relay 2.

Setting range: Off, On, Auto

Default value: Auto

Menu 9.3.7.18 [S] Return

Return to Menu 9.3.7.0.

Menu 9.3.8 [S] Factory setting

Here you can select to restore factory settings in HM 270V.

When returning to the factory settings the language switches to English.

Setting range: Yes, No

Default value: No

Menu 9.3.9 [S] Operating state

Describes the operating status of Hydrolution.

Shutdown: Additional heater and heat pump are shutdown due to an alarm.

Alternating: The heat pump produces heat and switches, when necessary, between hot water and heating.

Combined Mode: Due to a great heating demand, the electric heater is used for hot water and the heat pump produces heat. The electric heater assists, when necessary, with heat production.

Cooling: The heat pump produces cooling and switches between hot water and cooling system, when necessary.

Super cooling: Only cooling. This is carried out by the heat pump. Hot water produced by electric heater.

Hot water: Only hot water is produced. This is carried out by the heat pump.

Add heat only: The heat pump is off and both hot water and heat is produced by the electric heater.

Menu 9.3.10.0 [S] Floor drying setting

Settings for the floor drying program are made in the submenus to this menu.

Menu 9.3.10.1 [S] Floor drying

“On” or “Off” is selected for the floor drying program from this sub-menu. After time period 1 a switch is made to time period 2 followed by a return to the normal settings.

Setting range: Off, On

Default value: Off

Menu 9.3.10.2 [S] Period time 1

Selection of the number of days in period 1.

Setting range: 1 – 5 days

Default value: 3 days

Menu 9.3.10.3 [S] Temp. period 1

Selection of the flow temperature in period 1.

Setting range: 15 – 50 °C

Default value: 25 °C

Menu 9.3.10.4 [S] Period time 2

Selection of the number of days in period 2.

Setting range: 1 – 5 days

Default value: 1 days

Menu 9.3.10.5 [S] Temp. period 2

Selection of the flow temperature in period 2.

Setting range: 15 – 50 °C

Default value: 40 °C

Menu 9.3.10.6 [S] Return

Return to Menu 9.3.10.0.

Menu 9.3.11 [S] Supply pump exer.

Pump operation can be deactivated here. Pump is in operation for 2 minutes 12 hours after last operation.

Setting range: Off, On

Default value: On

Menu 9.3.12 [S] Supply diff HP

When the current supply water temperature deviates from the set value compared to that calculated, the heat pump is forced to stop/start irrespective of the degree-minute value.

Heating mode: If the current supply water temperature exceeds the calculated supply water by set value, the degree minute number is set to 1. The compressor stops when there is only a heating requirement.

If the current supply water temperature drops below the calculated temperature by set value, the degree minute number is overwritten to smaller value set in Menu 9.1.1 by 1. This means that the compressor will start.

Cooling mode: If the current supply water temperature drops below the calculated supply by set value, the degree minute number is set to -1. The compressor stops when there is only a cooling requirement.

Setting range: 3 – 25 °C

Default value: 10 °C

Menu 9.3.13 [S] Diff HP add. heat

If electric heater is permitted to use (Menu 8.2.1) and the current supply water temperature falls below the calculated temperature by the set value plus the value from Menu 9.3.12, the degree minute value is overwritten to bigger value set in Menu 9.2.1 by 1. When the compressor has reached full speed, the degree minute value is set to the value in Menu 9.2.1 and electric heater is permitted. This means that the electric heater can cut in immediately.

Setting range: 1 – 8 °C

Default value: 3 °C

Menu 9.3.14 [S] Block HW/Heating

If heating or hot water are not required, they can be deselected here.

Operating mode Hot water or Add. heat only will be selectable if heating is deselected.

Setting range: No HW, No heating, HW+Heating

Default value: HW+Heating

Menu 9.3.15 [S] Heat drop at alarm

Here you select whether heat production is to be reduced in the event of an alarm.

Setting range: Yes, No

Default value: Yes

Menu 9.3.16 [S] Type of HW sensor

Here you can select whether to use hot water sensors that manage higher temperatures (above 90 °C) or not.

Standard: Standard setting

High temp: Calculation for HW jacket sensor (BT6), Addition sensor (BT19) as well as supply sensor (BT2) are replaced to suit a sensor that manages higher temperatures (up to 110 °C). Used if new sensor is installed in connection with installation of solar heating.

Setting range: Standard, High temp

Default value: Standard

Menu 9.3.17 [S] Freeze protection HX

Select here whether water heat exchanger anti freeze is to be active or not.

Setting range: On, Off

Default value: On

Menu 9.3.18 [S] Return

Return to Menu 9.3.0.

Menu 9.4 [S] Quick start

If “Yes” is selected, the compressor starts in the heat pump within 4 minutes if there is a demand. However, there is always a 30 minute compressor start delay if the power supply has been switched off.

Setting range: No, Yes

Default value: No

Menu 9.5.0 [S] System info

The sub menus to this menu contain information that is used when troubleshooting.

Only for service personnel.

Menu 9.5.1 [S] Heat pump type

The type of connected heat pump is shown here.

Menu 9.5.2 [S] Cpu usage percent

The CPU load is shown here.

Menu 9.5.3 [S] Com rate/1000

The number of communication retransmissions is shown here.

Menu 9.5.4 [S] Unit w. com. problem

Any communication problems that a unit may have are shown here as well as the relevant unit.

Menu 9.5.5 [S] Run time add. heat

The accumulated running time for the electric heater since the first start is shown.

Menu 9.5.6 [S] Run time hot water

The accumulated operating time in hours for hot water production with compressor since the first start-up is shown here.

Menu 9.5.7 [S] Program version

The current program software version in indoor unit is shown here.

Menu 9.5.8 [S] 106-card version

The communication PCB version number is shown here (AA23).

Menu 9.5.9 [S] Display version

The display version number is shown here.

Menu 9.5.10 [S] Relay card version

The relay PCB version number is shown here.

Menu 9.5.11 [S] Lowest supply temp.

The minimum supply water temperature since start-up is shown here.

Menu 9.5.12 [S] Percent runtime

The compressor's running time percentage.

Menu 9.5.13 [S] Period

Period counter for switching between hot water and heating/cooling.

Menu 9.5.14 [S] Run status

Shows the current operating status of outdoor unit

The display can show: Off, Hot water, Heating, Cooling, Defrost, Oil return or XHW.

Menu 9.5.15 [S] Run status last

Shows the previous operating status for outdoor unit

The display can show: Off, Hot water, Heating, Cooling, Defrost, Oil return or XHW.

Menu 9.5.16 [S] Run status time

The time since the last operating status change.

Menu 9.5.17 [S] Return

Return to Menu 9.5.0.

Menu 9.6.0 [S] Heat reg. settings

Settings regarding the heating regulator can be made in the sub-menus to this menu.

Menu 9.6.1 [S] CompFreq

The current target frequency of the compressor is shown here.

Setting the target frequency during manual control of the compressor is activated in Menu 9.6.2.

	FDCW71	FDCW100	FDCW140
Setting range(Hz)	20 – 118	20 – 85	20 – 120

Menu 9.6.2 [S] Manual CompFreq

Select "On" to control the compressor frequency manually in Menu 9.6.1.

Setting range: Off, On

Default value: Off

Menu 9.6.3 [S] Max deltaF

The parameter for the heat regulator's max change of the target compressor frequency is selected here.

Setting range: 1 – 10 Hz

Default value: 3 Hz

Menu 9.6.4 [S] CompFreq regP

Select P part for heat regulator.

Setting range: 1 – 60 Hz

Default value: 5

Menu 9.6.5 [S] Time min freq start

Select here the time that the compressor is to run at min speed, after start connecting to the climate system.

Setting range: 10 – 120 min

Default value: 70 min

Menu 9.6.6 [S] Time min freq heat

Select here the time that the compressor is to run at fixed frequency after shifting to heating. The compressor then runs at min frequency or at the frequency it had before hot water charging.

Setting range: 3 – 60 min

Default value: 3 min

Menu 9.6.7 [S] Max diff flow-cFlow

You can set the maximum overshoot of the supply temperature from the target. Max. deviation of supply temperature is controlled by this setting regardless of degree minutes value.

Setting range: 2.0 – 10.0 °C

Default value: 4.0 °C

Menu 9.6.8 [S] CompFreq GMz

Here you select a value for the dynamic in the degree minute regulator.

Setting range: 95 – 127

Default value: 126

Menu 9.6.9 [S] Return

Return to Menu 9.6.0.

Menu 9.7 [S] Reset alarm

Select "Yes" here to reset/acknowledge alarms in indoor unit. The settings returns to "No" once the action has been carried out.

Setting range: Yes, No

Menu 9.8.0 [S] Alarm log

The alarm logs with the last 4 alarms are shown in the sub-menus of this menu.

Menu 9.8.1.0 – 9.8.4.0 [S] Log 1 – Log 4

The alarm logs are shown in the sub-menus of this menu. Log 1 is the last alarm, log 2 the next to last, etc.

Menu 9.8.x.1 [S] Time

Menu 9.8.x.2 [S] Alarm type

Error code is displayed. For details see page 146.

Alarm number	Cause
3	TB alarm
4	OU power failure
5	Low condenser out
6	High condensor out
7	Anti freeze HX
8	High HW temp.
9	High AH temp.
10	High supply temp. system 1
11	High supply temp. system 2
12	High return temp. system 1
13	High return temp. system 2
14	Aborted defrost
16	Aborted defrost
30	Sensor fault UG
31	S. fault HP
32	Sensor fault condensor out
33	S. fault Liquid line
34	S. fault HW
35	S. fault Add. Heat
36	Sensor fault supply temp. system 1
37	Sensor fault supply temp. system 2
38	Sensor fault return temp. system 1
39	Sensor fault return temp. system 2
E5	OU Com. error
E35	High HX temp
E36	High hotgas
E37	Sensor fault OU
E38	Sensor fault OU
E39	Sensor fault OU
E40	HP alarm
E41	Inverter error
E42	Inverter error
E45	Inverter error
E47	Inverter error
E48	Fan alarm
E49	LP alarm
E51	Inverter error
E53	Sensor fault OU
E54	LP alarm
E57	Low refrigerant
E59	Inverter error

Menu 9.8.x.3 [S] Run status

Menu 9.8.x.4 [S] Run status last

Menu 9.8.x.5 [S] Run status time

Menu 9.8.x.6 [S] Run time compressor

Menu 9.8.x.7 [S] Outdoor avg. 1min.

Menu 9.8.x.8 [S] Outdoor temp Tho-A

Menu 9.8.x.9 [S] Supply/Return temp

Menu 9.8.x.10 [S] Condensor out

Menu 9.8.x.11 [S] Hot water temp.

Menu 9.8.x.12 [S] CompFreq act/set

Menu 9.8.x.13 [S] Heat Ex Tho-R1

Menu 9.8.x.14 [S] Heat Ex Tho-R2

Menu 9.8.x.15 [S] Suction temp. Tho-S

Menu 9.8.x.16 [S] Hot gas Tho-D

Menu 9.8.x.17 [S] Liquid line temp.

Menu 9.8.x.18 [S] HP

Menu 9.8.x.19 [S] LP LPT

Menu 9.8.x.20 [S] OU current CT

Menu 9.8.x.21 [S] Inverter temp Tho-IP

Menu 9.8.x.22 [S] Circ-pump speed

Menu 9.8.x.23 [S] Relay status 1-8

Menu 9.8.x.24 [S] Relay status 9-14

Menu 9.8.x.25 [S] Program status 1-8

Menu 9.8.x.26 [S] Program status 9-16

Menu 9.8.x.27 [S] Return

Return to Menu 9.8.x.0.

Menu 9.8.5 [S] Clear alarm log

Select “Yes” to erase the entire alarm log. The settings returns to “No” once the action has been carried out.

Setting range: Yes, No

Menu 9.8.6 [S] Return

Return to Menu 9.8.0.

Menu 9.9 [S] Return

Return to Menu 9.0.

System description

Principle of operation Hydrolution

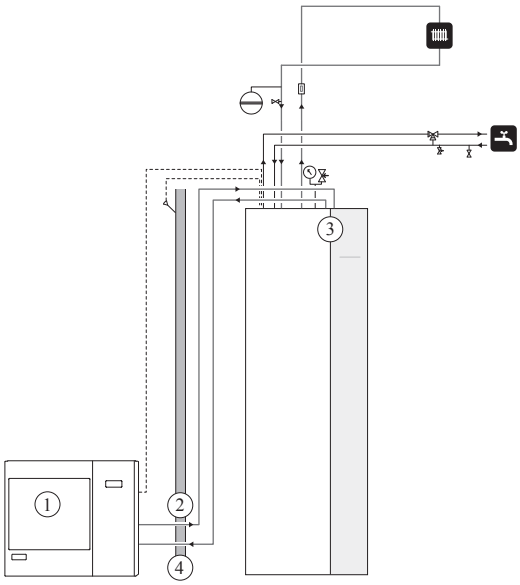

Function

Hydrolution is a system that can produce heating, hot water and cooling.

The principle during heating can be simplified as follows:

1. The refrigerant in outdoor unit retrieves heat from the outdoor air then compresses it, which increases the temperature further.
2. The hot refrigerant (now in gas state) is routed into indoor unit.
3. The refrigerant releases the heat for further distribution in the system.
4. The refrigerant (now in liquid state) is routed back to outdoor unit and the process is repeated.

By reversing the process, thereby allowing the refrigerant in outdoor unit to retrieve the heat from the water and release it into the outdoor air, the heat pump can cool instead, if necessary.

Indoor unit determines when outdoor unit is to work and not to work, using the collated data from the temperature sensor. In the event of extra heat demands, indoor unit can connect additional heat in the form of the internal immersion heater, or any connected external addition.

Heating operation mode [Alternating mode]

(When the heat load can be covered by the capacity of outdoor unit)

100% of hot water from water heat exchanger goes to radiator.
Hot water in the tank is not used.
Water pump runs at constant speed set at commissioning.
When the water temperature in tank drops due to sanitary water use, the operation is switched to Hot water operation mode.

Counterflow in water heat exchanger EP2

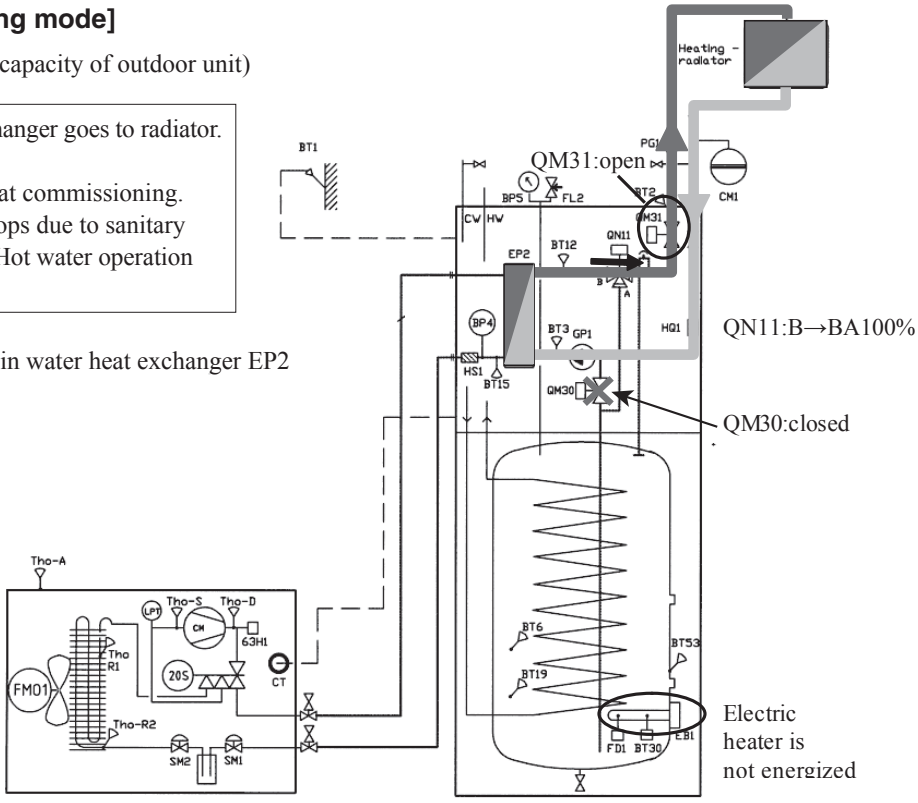

Heating operation mode [Combined mode]

(When the heat load cannot be covered by the capacity of outdoor unit)

If the heat load is big and outlet water temperature of water heat exchanger does not reach target water temperature, hot water from water heat exchanger goes to tank partially and hot water in the tank warmed with electric heater comes into the radiator circuit in order to adjust the hot water temperature to reach target water temperature.
Opening degree of 3-way valve is adjusted by watching temperature with BT2.
Water pump runs at constant speed set at commissioning.

Counterflow in water heat exchanger EP2

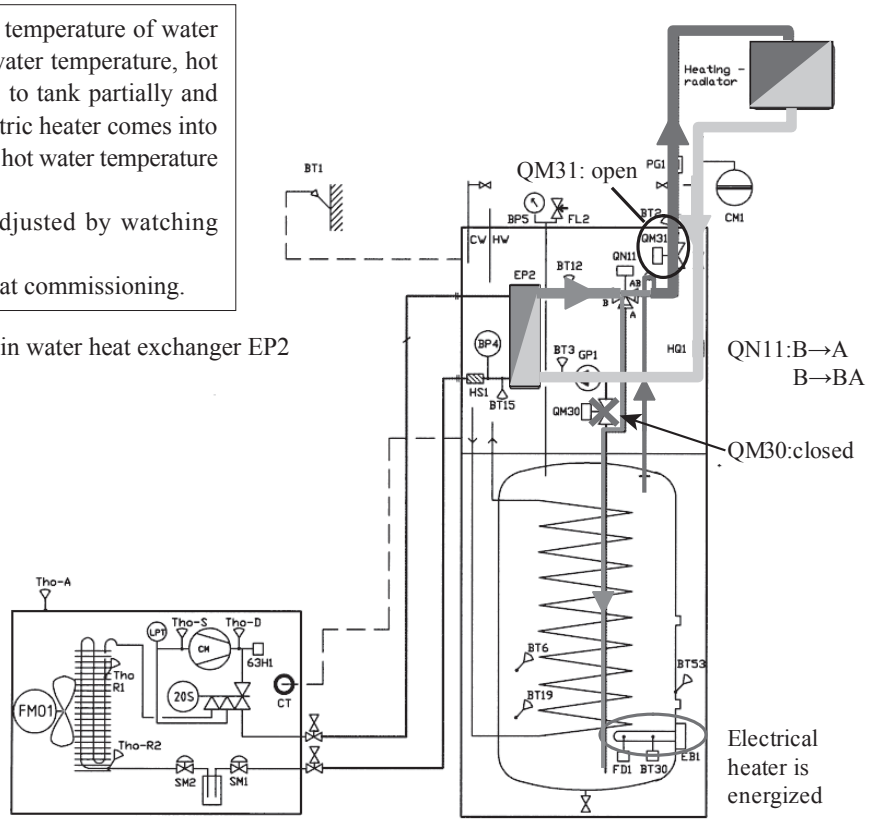

Hot water operation mode

(When the water temperature in tank is decreased below setting temperature)

100% of hot water from water heat exchanger goes to tank. (Take note that water flow going in/out tank is different from combined mode).
Water pump controls its speed by watching temperature with BT12 in order to adjust hot water volume to be returned. (DC motor pump can control variable speed)

Counterflow in water heat exchanger EP2

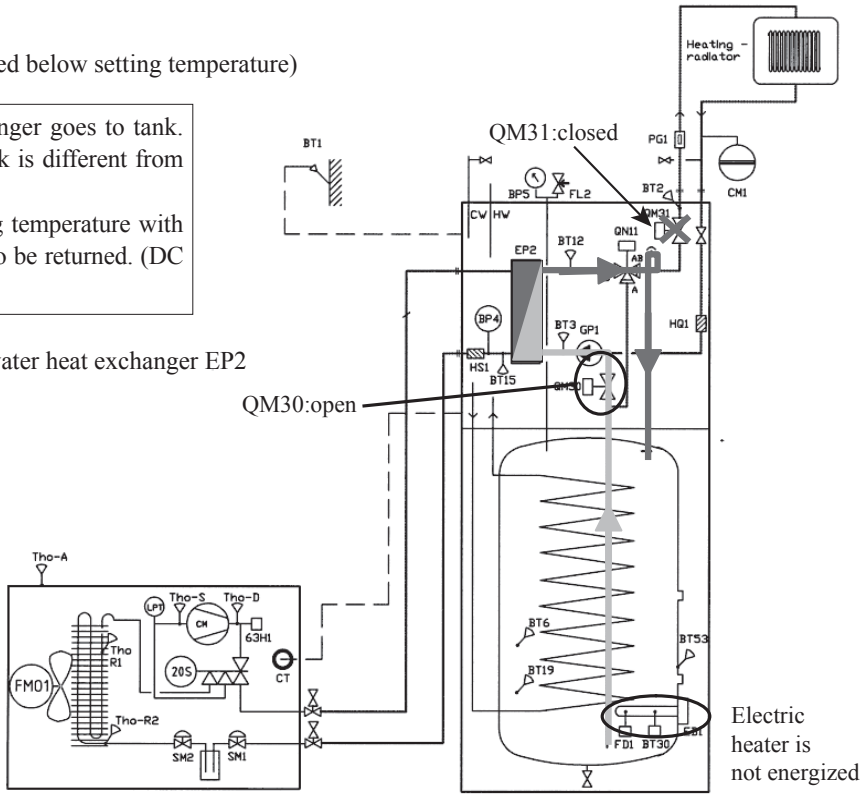

Cooling operation mode

100% of cold water from water heat exchanger goes to radiator/fan coil etc.
Water pump runs at constant speed set at commissioning.
When the hot water demand occurs,
Electric heater is permitted: Electric heater is energized.
Electric heater is prohibited: Outdoor unit is switched to Hot water mode.

Parallel flow in water heat exchanger EP2

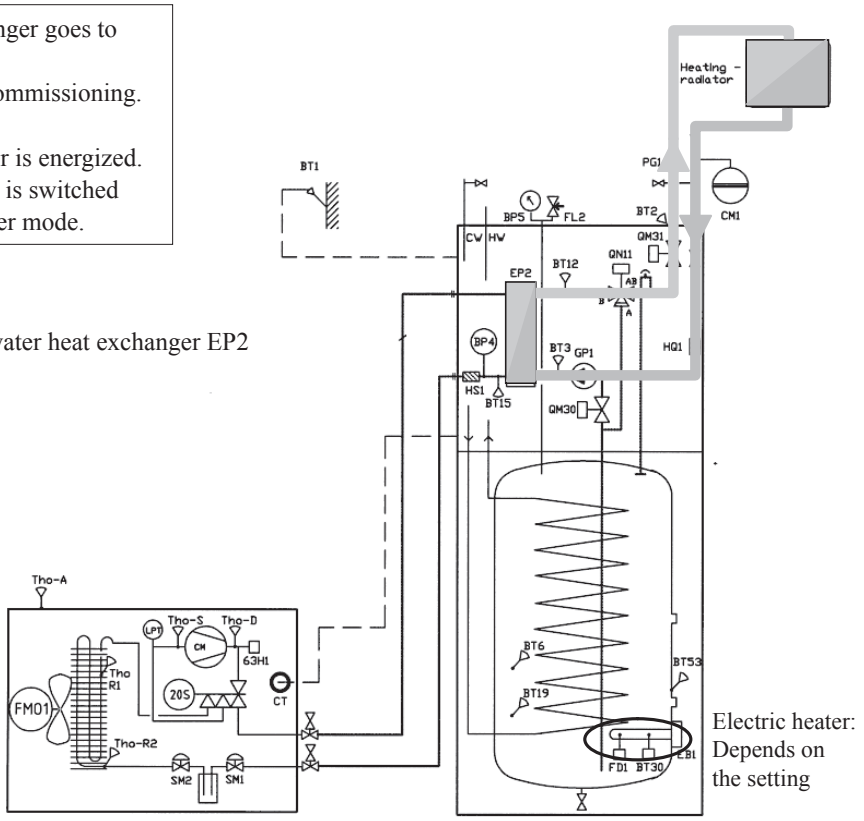

General

Explanation

External	
QN11	Mixing valve
QN12	Shuttle valve for heating/cooling
RM	Non-return valve
CM1	Expansion vessel
EP21	Heating system 2
GP10	Circulation pump, external 1
KF	External control
PG1	Flow indicator
MH-RG10	Room sensor MH-RG 10 (accessory)
CP1	Buffer vessel (accessory)
FL1	Safety valve
FQ1	Mixer valve, HW

Indoor unit	
BT1	Temperature sensor, outdoor air (external)
BT2	Temperature sensor, supply
BT3	Temperature sensor, heat exch. in (Twin)
BT6	Temperature sensor, tank water
BT12	Temperature sensor, heat exch. out (Twout)
BT15	Temperature sensor, liguid pipe (Thi-L)
BT19	Temperature sensor, immersion heater
BT24	Temperature sensor, external heat source
BT30	Thermostat, standby mode
FD1	Temperature limiter
BP4	High pressure sensor
QN11	Mixing valve
QM30	Reversing valve, hot water
QM31	Reversing valve, climate system
HS1	Filter dryer (refrigerant)
EB1	Immersion heater
EP2	Heat exchanger
GP1	Circulation pump, climate system
HQ1	Particle (water)
FL2	Safety valve, tank
BP5	Pressure gauge
CW	Sanitary cold water inlet
HW	Sanitary hot water outlet

Outdoor unit	
Tho-A	Temperature sensor, outdoor air
Tho-D	Temperature sensor, hot gas
Tho-R1	Temperature sensor, heat exchanger out
Tho-R2	Temperature sensor, heat exchanger, in
Tho-S	Temperature sensor, suction gas
LPT	Low pressure sensor
63H1	High pressure switch
CT	Current sensor
EEV-C	Expansion valve, cooling
EEV-H	Expansion valve, heating
FMo1	Fan motor
20S	4-way valve
CM	Compressor motor
SV	Valve, solenoid

Radiators - only heating

HMA100V - FDCW100VNX (71VNX)

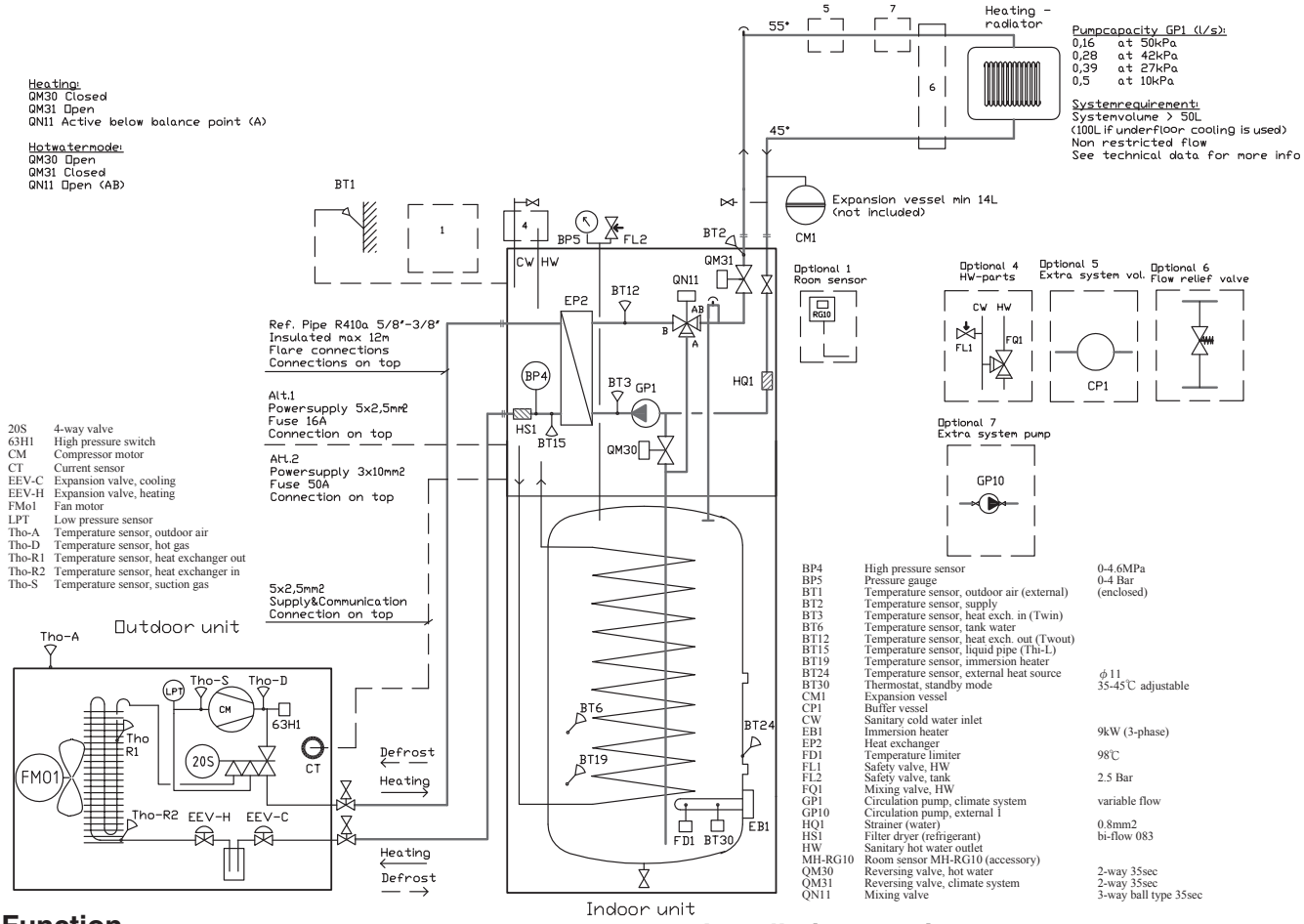

Function

The heat pump prioritises hot water charging. The compressor output is adjusted according to the outdoor temperature. The circulation pump varies the flow to maintain a high charge temperature.

When the water heater is full, the valves QM30 and QM31 switch to the heating system. The heat pump is then controlled by a calculated set point value on the flow line. The compressor varies the output according to the demand. The circulation pump runs at a fixed set speed.

If the compressor does not manage the entire heat demand, the electric heater is activated if it is allowed by setting and the heat shunted out on the flow line.

Heating mode	
QM30	Closed
QM31	Open
QN11	Active during balance point (A)

Hot water mode	
QM30	Open
QM31	Closed
QN11	Open (AB)

Installation requirements

See page 9.

HMS140V (MT300)-FDCW140VNX

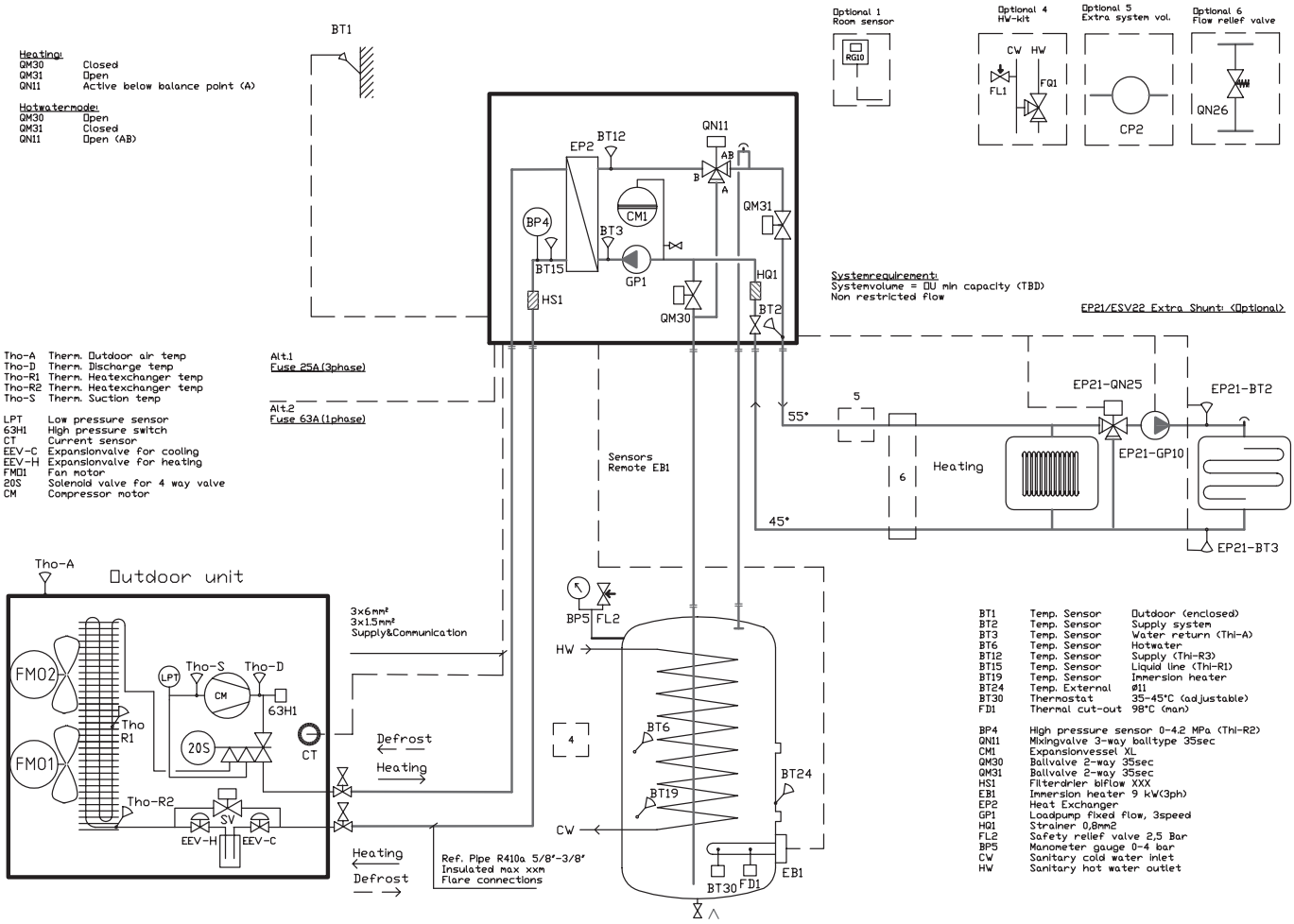

Function

The heat pump prioritises hot water charging. The compressor output is adjusted according to the outdoor temperature. The circulation pump varies the flow to maintain a high charge temperature.

When the water heater is full, the valves QM30 and QM31 switch to the heating system. The heat pump is then controlled by a calculated set point value on the flow line. The compressor varies the output according to the demand. The circulation pump runs at a fixed set speed.

If the compressor does not manage the entire heat demand, the electric heater is activated if it is allowed by setting and the heat shunted out on the flow line.

Heating mode	
QM30	Closed
QM31	Open
QN11	Active during balance point (A)

Hot water mode	
QM30	Open
QM31	Closed
QN11	Open (AB)

Installation requirements

See page 9.

Underfloor heating and cooling

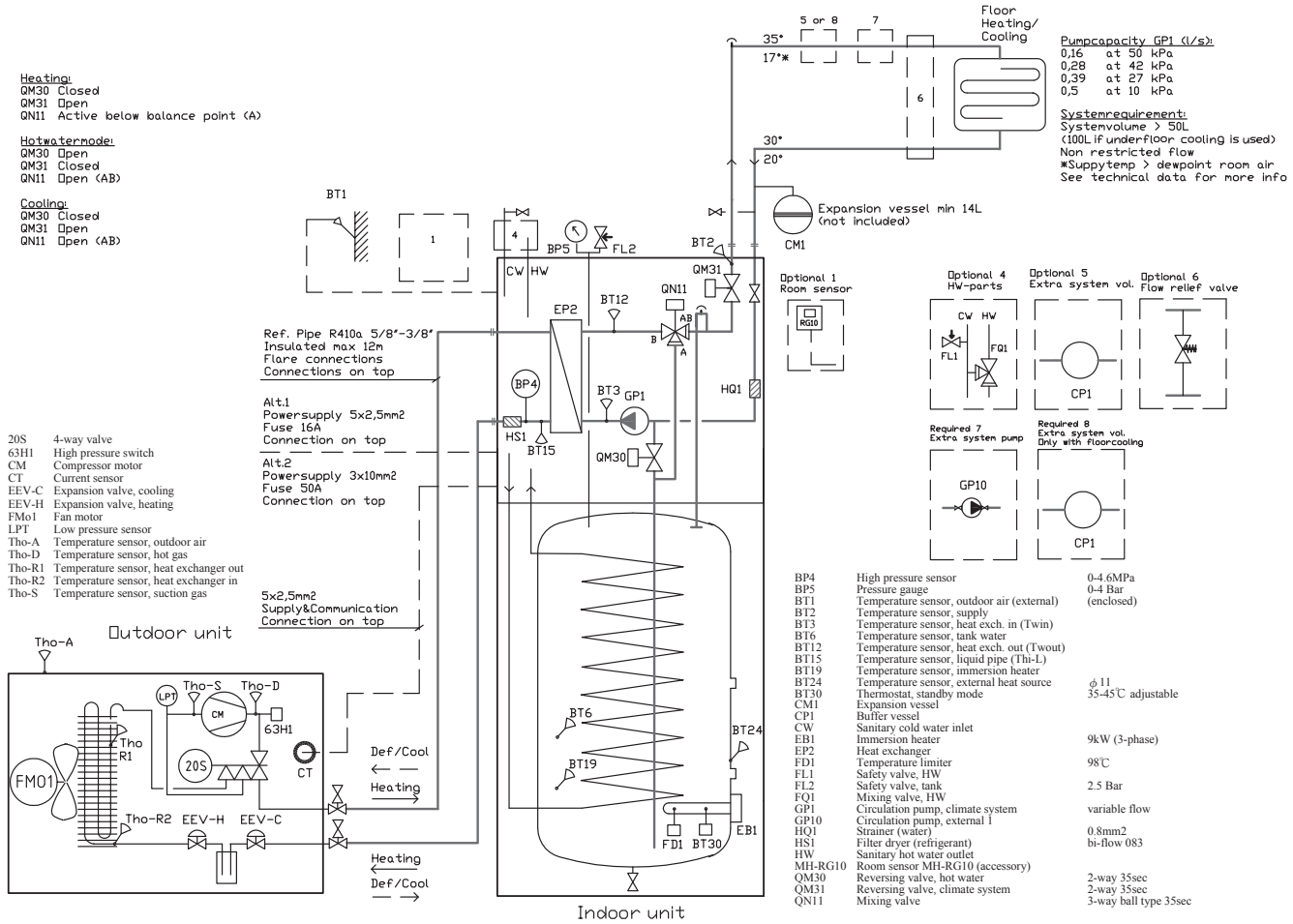

Function

The heat pump prioritises hot water charging. The compressor output is adjusted according to the outdoor temperature. The circulation pump varies the flow to maintain a high charge temperature.

When the water heater is full, the valves QM30 and QM31 switch to the heating system. The heat pump is then controlled by a calculated set point value on the flow line. The compressor varies the output according to the demand. The circulation pump runs at a fixed set speed.

If the compressor does not manage the entire heat demand, the electric heater is activated if it is allowed by setting and the heat shunted out on the flow line.

In the event of a cooling demand, the heat pump is controlled by a calculated set point value on the flow line. The compressor varies the output according to the demand. The charge pump runs at a fixed set speed.

Heating mode	
QM30	Closed
QM31	Open
QN11	Active during balance point (A)

Hot water mode	
QM30	Open
QM31	Closed
QN11	Open (AB)

Cooling mode	
QM30	Closed
QM31	Open
QN11	Open (AB)

Installation requirements

See page 9.

NOTE

Low supply temperature setting may cause condensation on the floor.

Fan convectors - heating and cooling

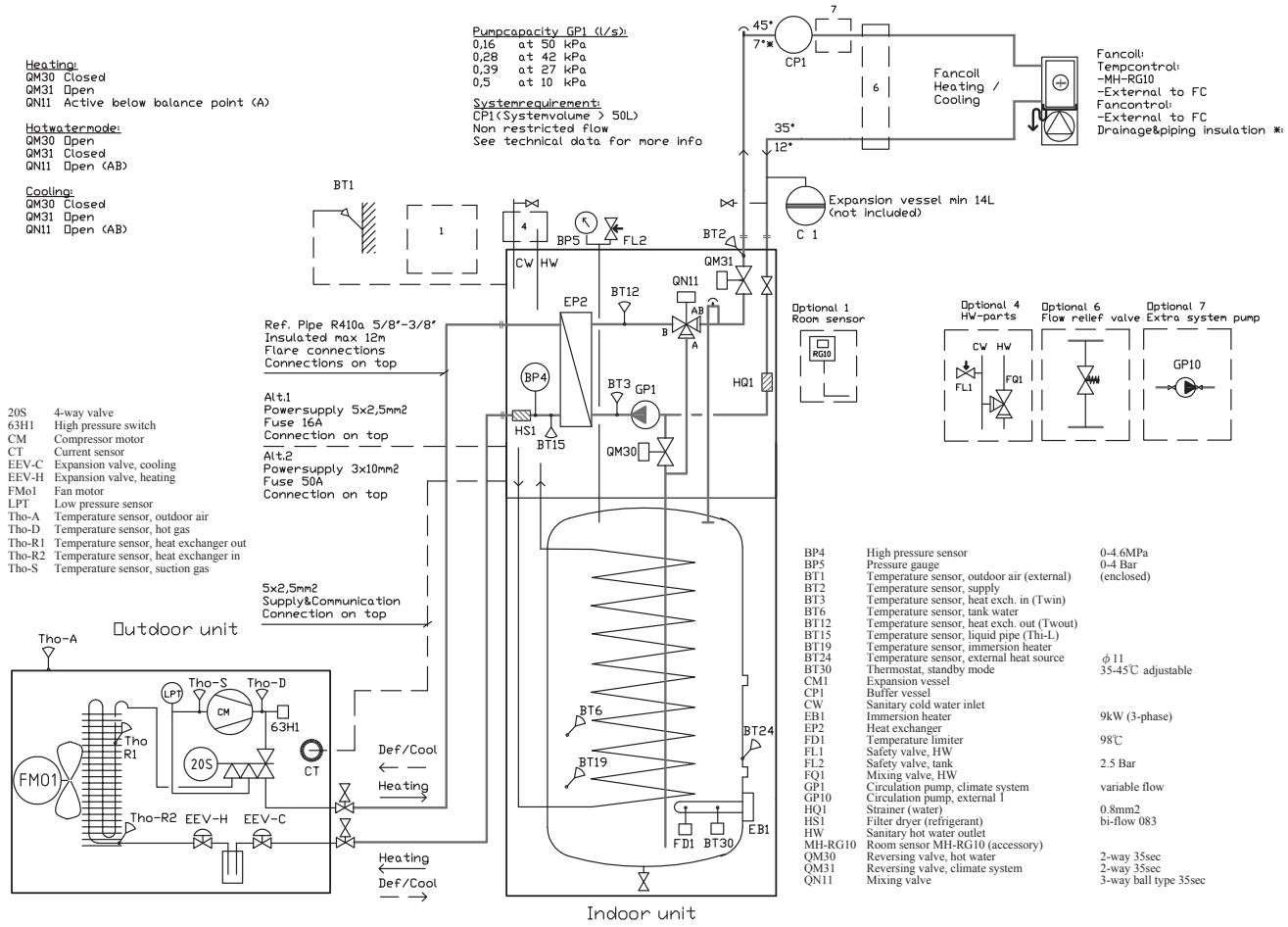

Function

The heat pump prioritises hot water charging. The compressor output is adjusted according to the outdoor temperature. The circulation pump varies the flow to maintain a high charge temperature.

When the water heater is full, the valves QM30 and QM31 switch to the heating system. The heat pump is then controlled by a calculated set point value on the flow line. The compressor varies the output according to the demand. The circulation pump runs at a fixed set speed.

If the compressor does not manage the entire heat demand, the electric heater is activated if it is allowed by setting and the heat shunted out on the flow line.

In the event of a cooling demand, the heat pump is controlled by a calculated set point value on the flow line. The compressor varies the output according to the demand. The charge pump runs at a fixed set speed.

Heating mode	
QM30	Closed
QM31	Open
QN11	Active during balance point (A)

Hot water mode	
QM30	Open
QM31	Closed
QN11	Open (AB)

Cooling mode	
QM30	Closed
QM31	Open
QN11	Open (AB)

Installation requirements

See page 9.

Dual system - heating and cooling

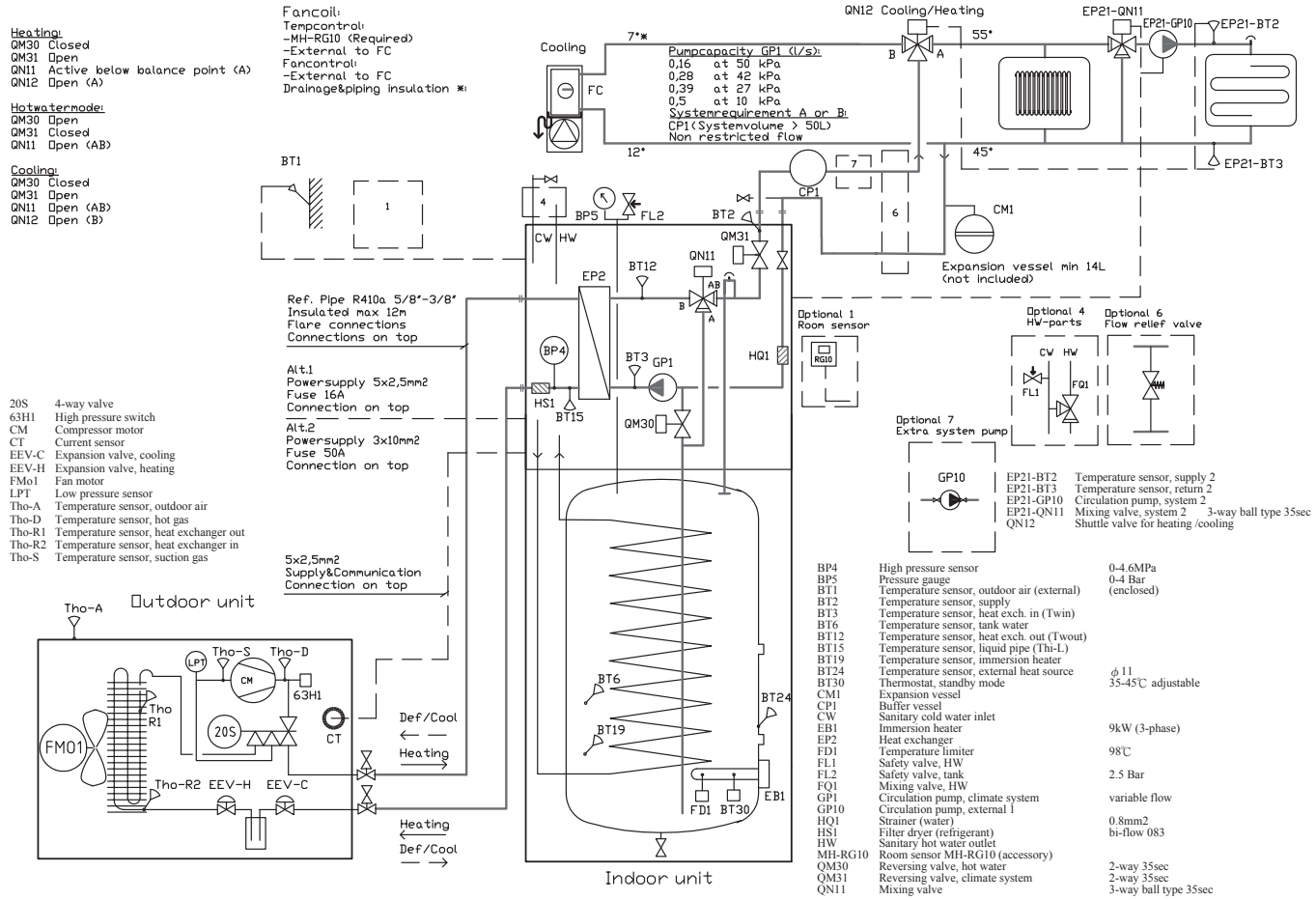

Function

The heat pump prioritises hot water charging. The compressor output is adjusted according to the outdoor temperature. The circulation pump varies the flow to maintain a high charge temperature.

When the water heater is full, the valves QM30 and QM31 switch to the heating system. The heat pump is then controlled by a calculated set point value on the flow line. The compressor varies the output according to the demand. The circulation pump runs at a fixed set speed.

Extra shunt (EP21-QN11) lowers the temperature on system 2 according to settings in indoor unit.

If the compressor does not manage the entire heat demand, the electric heater is activated if it is allowed by setting and the heat shunted out on the flow line.

During cooling the valve QN12 switches to the cooling system. The heat pump is then controlled by a calculated set point value on the flow line. The compressor varies the output according to the demand. The circulation pump runs at a fixed set speed.

Heating mode	
QM30	Closed
QM31	Open
QN11	Active during balance point (A)
QN12	Open (A)

Hot water mode	
QM30	Open
QM31	Closed
QN11	Open (AB)

Cooling mode	
QM30	Closed
QM31	Open
QN11	Open (AB)
QN12	Open (B)

Installation requirements

See page 9.

Underfloor heating and fan convectors- heating and cooling

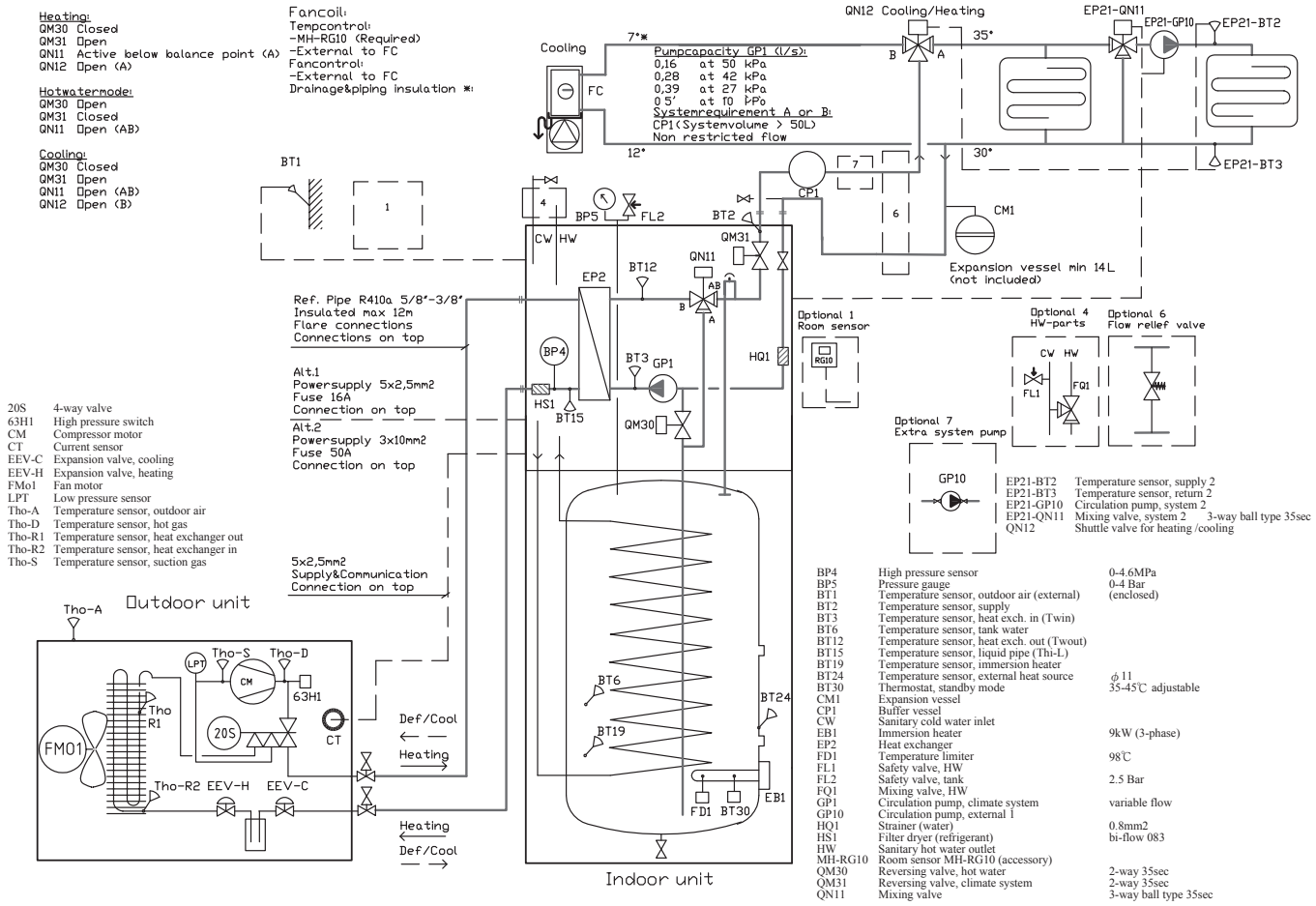

Function

The heat pump prioritises hot water charging. The compressor output is adjusted according to the outdoor temperature. The circulation pump varies the flow to maintain a high charge temperature.

When the water heater is full, the valves QM30 and QM31 switch to the heating system. The heat pump is then controlled by a calculated set point value on the flow line. The compressor varies the output according to the demand. The circulation pump runs at a fixed set speed.

Extra shunt (EP21-QN11) lowers the temperature on system 2 according to settings in indoor unit.

If the compressor does not manage the entire heat demand, the electric heater is activated if it is allowed by setting and the heat shunted out on the flow line.

During cooling the valve QN12 switches to the cooling system. The heat pump is then controlled by a calculated set point value on the flow line. The compressor varies the output according to the demand. The circulation pump runs at a fixed set speed.

Heating mode	
QM30	Closed
QM31	Open
QN11	Active during balance point (A)
QN12	Open (A)

Hot water mode	
QM30	Open
QM31	Closed
QN11	Open (AB)

Cooling mode	
QM30	Closed
QM31	Open
QN11	Open (AB)
QN12	Open (B)

Installation requirements

See page 9.

External heat source

Sun

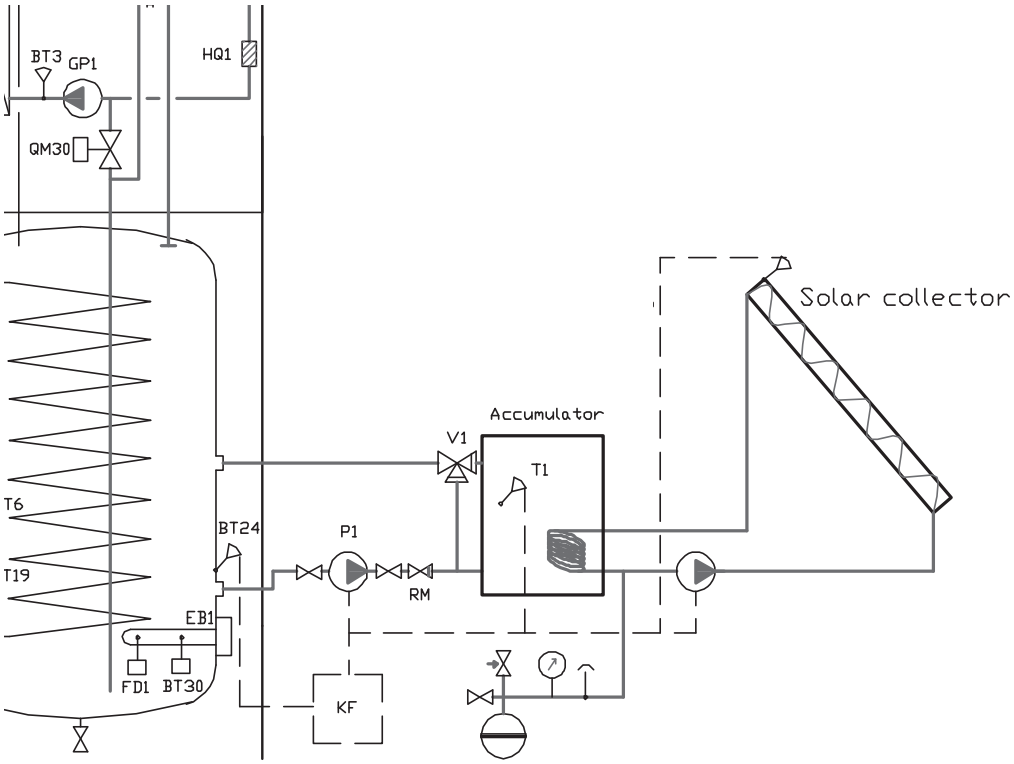

Function

By connecting a solar heat collector via intermediate heat exchanger to indoor unit or tank, the solar heat can produce hot water and heating for the house.

If the solar panel does not produce necessary heat, the outdoor unit and the imnersion heater generate heat.

The solar panel must have an external automatic control device (KF) as follows:

P1 should stop when BT24 senses 65 °C at maximum.

P1 shouldn't start until T1 reaches 55 °C at minimum.

V1 must control the supply temperature at 65°C or lower.

Accumulators and primary system design are dimensioned by the boiler supplier. Ensure that there is sufficient volume to prevent overheating.

Gas

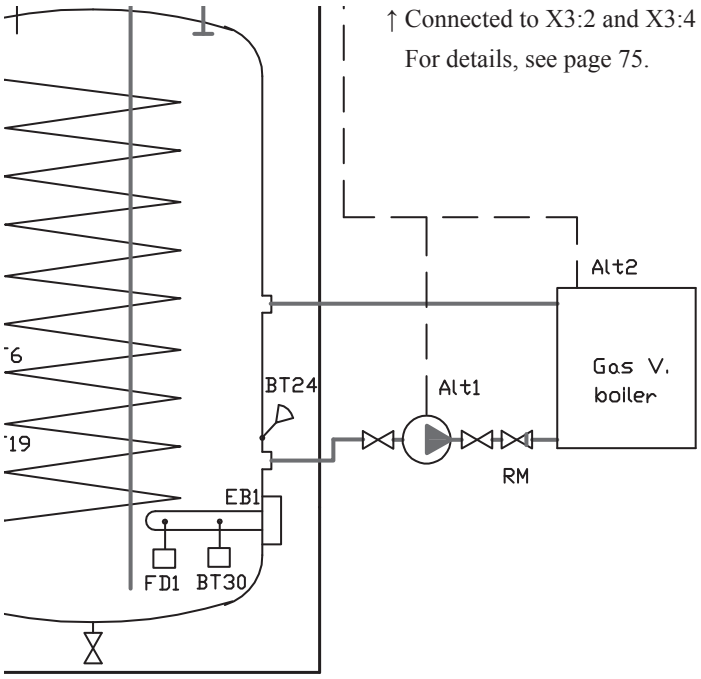

↑ Connected to X3:2 and X3:4 with the jumper wire on X3:2-3 removed.
For details, see page 75.

Function

Hydrolution engages additional heat source when the compressor output is not sufficient for the house demand.

When the additional heat source is connected, valves QM 30 and QM31 shift to the heating system. Valve QN11 shunts in the event of a heat demand on the flow line. Hot water can be produced with the addifional heat source.

Max temp should be 65°C out from the gas fired boiler.

Control signal for additional heat source taken from terminal block X3.

Jumper wire between X3:2-3 must be removed.

The control signal input is connected to terminal block X3:2 (230V), X3:4 (N).

Menu 9.2.8 set to External Line 1.

Alt 1: The gas boiler runs continuously. Indoor unit controls the circulation pump.

Alt 2: Condensing gas boiler with internal circulation pump. Indoor unit provides the gas boiler with start and stop signals.

NOTE

Maximum current on the terminal block X3 is 0.4A

Oil

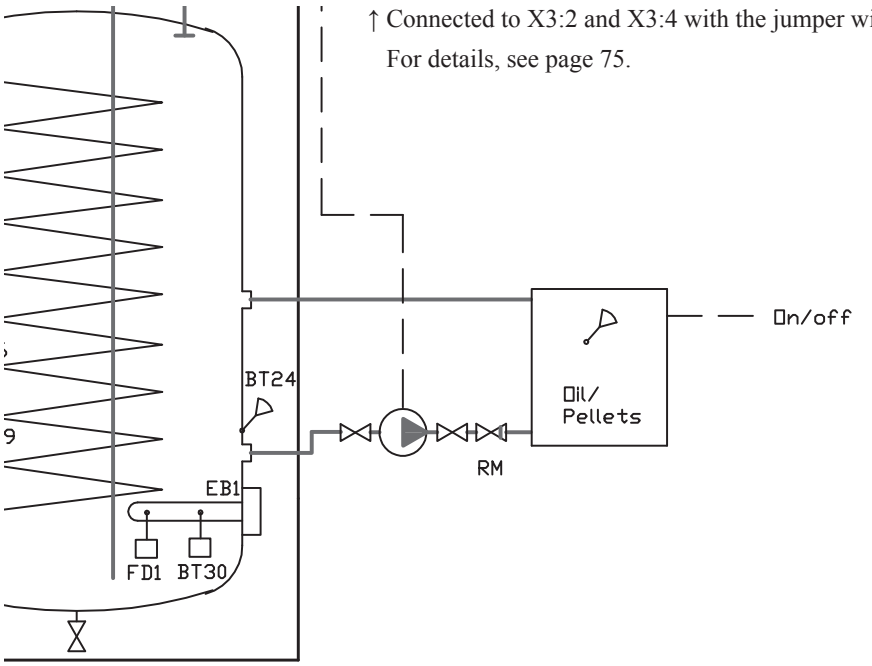

Function

Hydrolution engages additional heat source when the compressor output is not sufficient for the house demand.

When the additional heat source is connected, valves QM 30 and QM31 shift to the heating system. Valve QN11 shunts in the event of a heat demand on the flow line. Hot water can be produced with the additional heat source.

Max temp should be 65°C out from the oil/pellet boiler.

Control signal for additional heat source taken from terminal block X3.

Jumper wire between X3:2-3 must be removed.

The control signal input is connected to terminal block X3:2 (230V), X3:4 (N).

Menu 9.2.8 set to External Line 1.

The oil fired boiler is started and stopped by external control. Indoor unit controls the circulation pump.

NOTE

Maximum current on the terminal block X3 is 0.4A

Wood

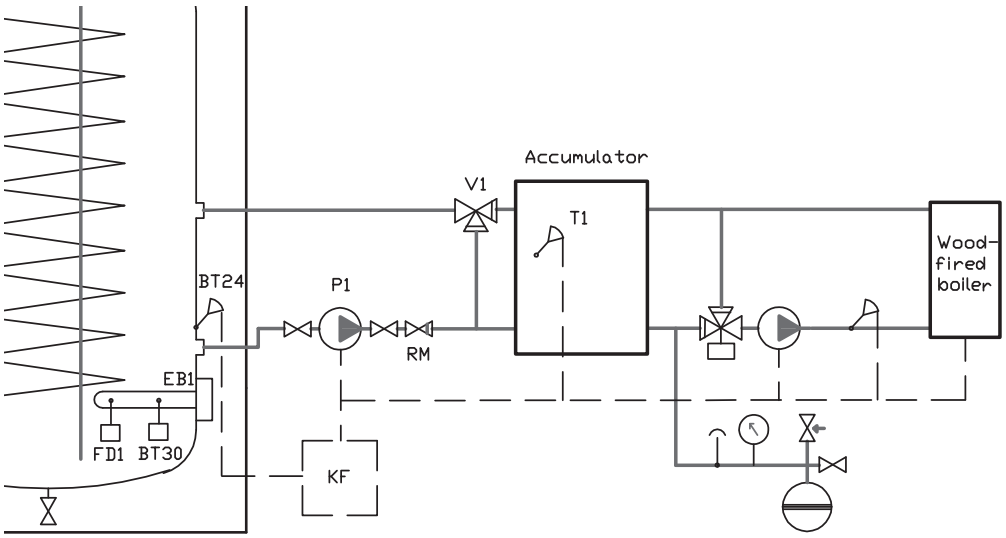

Function

By connecting a wood-fired boiler via accumulator tank to indoor unit or tank, hot water and heat to the house can be produced by it.

If there is no heat in the accumulator tank, heat and hot water are produced by the heat pump or by internal electric heater according to the selected operating mode.

The wood installation must have an external automatic control device (KF) as follows:

P1 should stop when BT24 senses 65 °C at maximum.

P1 shouldn't start until T1 reaches 55 °C at minimum.

V1 must control the supply temperature at 65°C or lower.

Accumulators and primary system design are dimensioned by the boiler supplier. Ensure that there is sufficient volume to prevent overheating.

Service

Operation control function by the indoor unit controller

Operation mode

General

The modes mentioned below can be chosen from the control panel. Hot water operation always has the first priority over heating/cooling.

Mode	Function
(1) Auto	● The mode is automatically switched over between (3) Heating mode and (5) Hot water operation mode. Automatic switching rule is mentioned below.
(2) AutoC	● The mode is automatically changed among (3) Heating mode, (4) Cooling mode and (5) Hot water mode. Automatic switching rule is mentioned below.
(3) Heating	● Hot water is supplied for heating. ● Circulation pump is always running for heating regardless of the outdoor unit operation. ● Hot water operation will be made when the tank water temperature lowers. (Alternating mode, see page 109 for details) ● When the outdoor unit can not cover the heat load, electric heater use is allowed and water in the tank is supplied for heating to fulfill the required heat load. (Combined mode, see page 109 for details.)
(4) Cooling (Super Cooling)	● Cold water is supplied for cooling. ● Circulation pump is always running for cooling regardless of the outdoor unit operation. ● Hot water operation will be made when the tank water temperature lowers; by the outdoor unit if the electric heater is not allowed (Cooling) by the electric heater if it is allowed (Super Cooling)
(5) Hot water	● Always hot water operation . ● Water is not supplied to the climate system. ● Circulation pump stops when the outdoor unit stops. ● Electric heater use is not allowed.
(6) Extra hot water	● Hot water operation for higher temperature or for big demand. ● Electric heater is used if the target temperature is higher than the operable range of the heat pump.
(7) Add. Heat only	● Outdoor unit is not allowed to operate. ● Only electric heater is exclusively used for Heating and Hot water operation. ● Circulation pump is always running.

Note 1 : The measured value of outdoor air temperature (BT1) which is used for control, is averaged in accordance with the prescribed formula. See Menu 4.2 for setting.
Note 2 : Heating/Cooling demand is calculated as numeric DM (Degree Minutes) from the supply water temperature (BT2) and its target temperature in accordance with the prescribed formula. See Menu 2.6, 9.1.1, 9.1.2 and 9.2.1 for setting.
Note 3 : Electric heater can be replaced with external heat source of the docking feature. See Menu 8.2.1, 8.2.2 and 9.2.8 for setting.
Note 4 : Two sets of climate system can be controlled with different heating curve. See Menu 3.1-3.7 for setting.

Actuator operation according to the operation mode

State	Function	Run status	Outdoor unit side			Indoor unit side					
			Compressor CM	Outdoor fan FMo1	4-way valve 20S	Electric heater EB1	Circulation pump GP1	Shunt valve QN11	Ball valve QM30	Ball valve QM31	Cooling shift valve QN12
Heating Alternating mode	Switching between heating and hot water	Heating	ON/OFF	ON/OFF	ON	OFF	ON	Closed (B⇒AB)	Closed	Open	Closed (⇒A)
		Hot water							Open	Closed	
Heating Combined mode	Outdoor unit produces heating and electric heater supports lack of capacity	Heating	ON	ON	ON	ON	ON	Active (B⇒A)	Closed	Open	Closed (⇒A)
Cooling	Switching between cooling and hot water	Cooling	ON/OFF	ON/OFF	OFF	OFF	ON	Closed (B⇒AB)	Closed	Open	Open (⇒B)
		Hot water			ON				Open	Closed	
Super Cooling	Outdoor unit produces cooling and electric heater produces hot water	Cooling	ON/OFF	ON/OFF	OFF	–	ON	Closed (B⇒AB)	Closed	Open	Open (⇒B)
		Hot water	–	–	–	ON					
Hot water	Producing hot water	Hot water	ON	ON	ON	OFF	ON	Closed (B⇒AB)	Open	Closed	Closed (⇒A)
		Stopping	OFF	OFF	ON		OFF				
Add. Heat only	Producing heating and hot water with electric heater	Heating	OFF	OFF	ON/OFF	ON	ON	Active (B⇒A)	Closed	Open	Closed (⇒A)
		Hot water									
Defrost	Defrosting outdoor unit heat exchanger	Defrost	ON	ON	OFF	OFF	ON	Closed (B⇒AB)	Closed	Open	Closed (⇒A)
		Defrost 2				ON			Open	Closed	
Shutdown	Only in the event of serious alarms	Stop	OFF	OFF	ON/OFF	OFF	ON	Closed (B⇒AB)	Closed	Open	Closed (⇒A)

Note:
Defrost 2: When BT19 or return water temp. < Tank defrost temp.

Mode transition in Auto/AutoC mode

Change-over of Heating/Cooling/Hot water operation is controlled by detection with outdoor air temperature sensor (BT1) of the indoor unit. Threshold value depends on setting on Menu 8.2.3 – 8.2.5.

Menu 8.2.3 Stop temp. heating:
If outdoor air temperature is below setting value on Menu 8.2.3-8.2.5, heating mode is chosen.
If outdoor air temperature is above setting value on Menu 8.2.3, it switches to hot water mode.
Default of setting value is 17°C.

Menu 8.2.4 Start temp. cooling (in case of AutoC mode):
If outdoor air temperature is above setting value on Menu 8.2.4, cooling mode is chosen.
If outdoor air temperature is below setting value on Menu 8.2.4-8.2.5, it switches to hot water mode.
Default of setting value is 25°C.

Menu 8.2.5 Hysteresis:
Default of setting value is 1k.

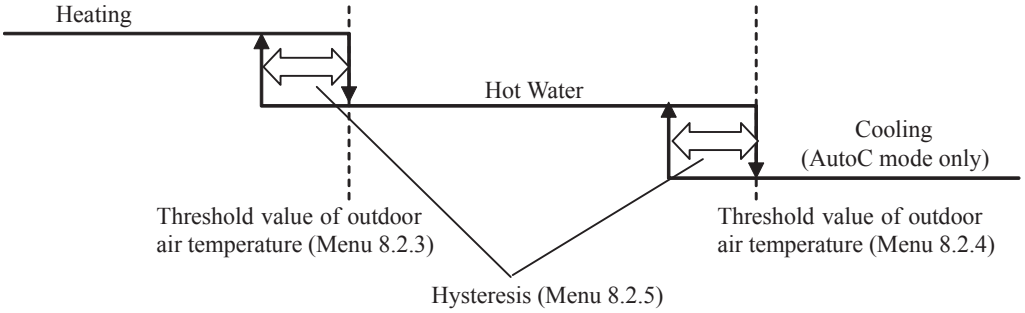

Mode transition by outdoor air temperature

Mode transition in Auto/AutoC mode with room sensor (MH-RG10) used

When MH-RG10 is installed in the system, mode is decided not only by outdoor air temperature but also by in combination with the gap between actual room temperature (BT50) and set room temperature.
The set value of start temp cooling can be smaller than that of stop temp heating. In this case, heating and cooling operation will be change-over directly at the threshold value for cooling on Menu 8.2.4-8.2.5.

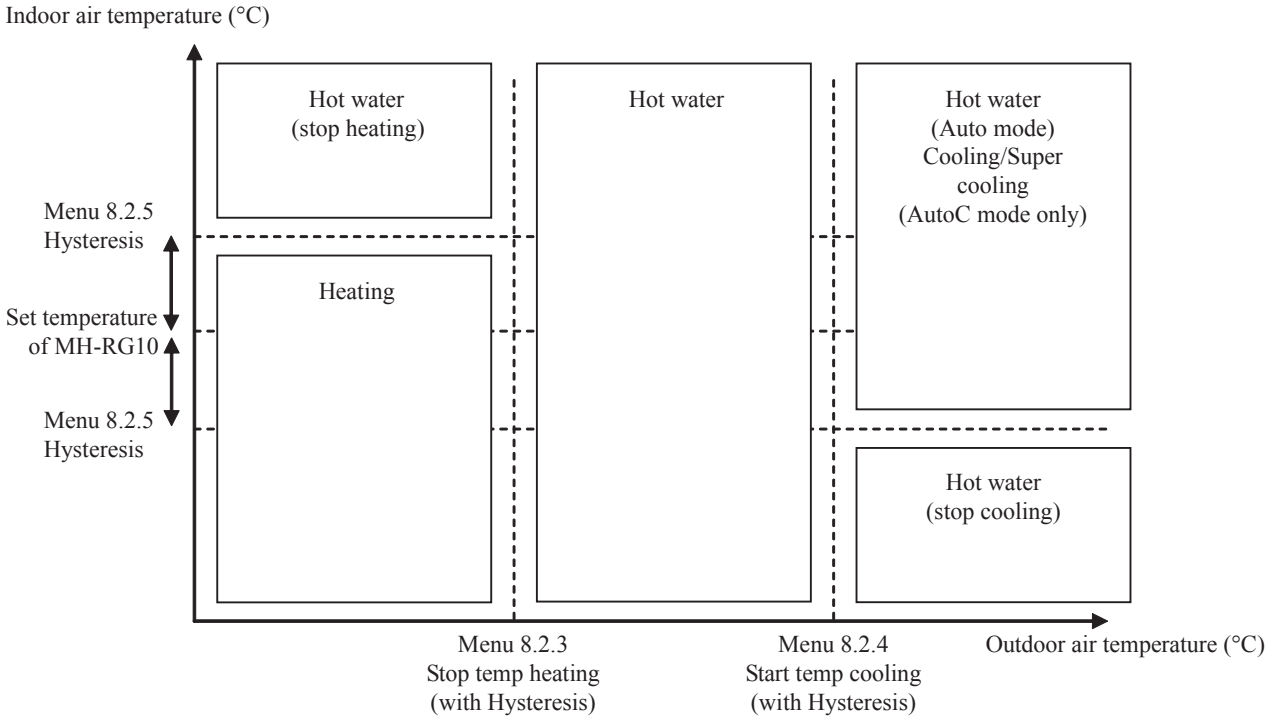

Mode transition when MH-RG10 is used

The required indoor temperature can be set using the knob on MH-RG10. The set temperature can be seen in Menu 6.3.

Exceptional case of mode transition

In order to prevent water pipes on the system from freezing, there is some exception of mode transition when the outdoor air temperature (BT1) drops below 0°C.

1) In (4) Cooling or (5) Hot water mode;

Operation changed to (3) Alternating mode of Heating with the lowest allowable temperature of supply water as the target.

If the supply water temperature does not reach the target, electric heater is forcibly activated regardless of the setting so that the supply water temperature is kept at the lowest allowable temperature.

2) In (1) Auto or (2) AutoC mode and the condition to choose (5) Hot water mode is fulfilled; (3)Heating mode is chosen instead, and the circulation pump operates at all time.

When the outdoor air temperature (BT1) exceeds 1°C, the exceptional operation is deactivated.

During combined mode of heating, it is also deactivated regardless of the outdoor air temperature (BT1) if the target temperature of supply water exceeds its lowest allowable temperature plus 1°C.

Supply water temperature control in heating

Target supply water temperature can be seen in Menu 2.0 (for heating system 1) and 3.0 (for heating system 2).

For dual system, the target temperature for downstream heating system must be lower than that for upstream heating system.

Heating curve

Heating curve is the basic principle to decide the target supply water temperature for heating.

The lower the outdoor air temperature (BT1) becomes, the higher the target supply water temperature becomes, and the characteristics can be adjusted in Menu 2.1.2 (for heating system1) or in Menu 3.2 (for heating system 2).

The figure below shows the case that heating curve 9 is chosen. In this case, the target supply water temperature is 55°C at -20°C outdoor air temperature condition.

Heating curve offset 0

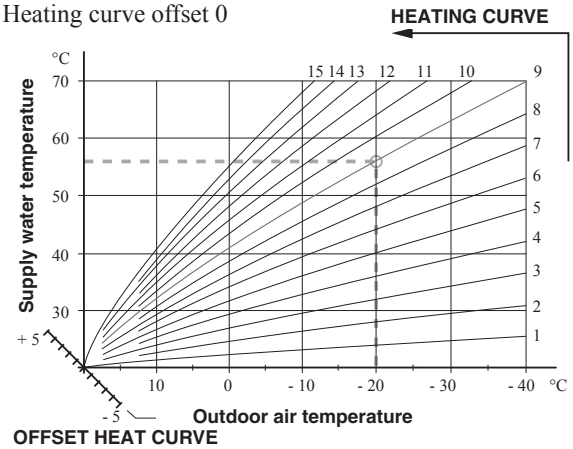

Heating curve offset

It is possible to offset the heating curve chosen in the menu above in order to obtain higher target supply water temperature.

The offset for heating system 1 can be set using the knob on the controller. The set value can be seen in Menu 2.1.1.

The figure below shows the case that heating curve 9 is chosen with heating curve offset +2. In this case, the target supply water temperature is 60°C at -20°C outdoor air temperature condition.

Heating curve offset +2

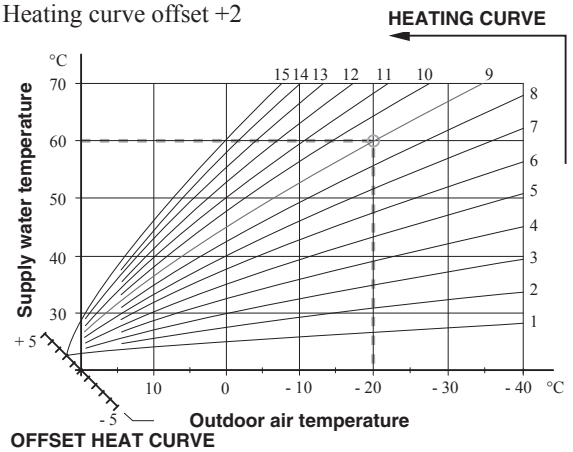

The offset for heating system 2 can be set in Menu 3.1.

Upper / Lower limit of the supply water temperature

Regardless of the heating curve setting and the outdoor air temperature, target water temperature cannot exceed the min/max supply water temperature set in Menu 2.1.4 and 2.3 for heating system 1 or in Menu 3.3 and 3.4 for heating system 2.

Upper and lower limit is set after various offset correction.

For example, when the upper and lower limit is set as below mentioned figure, and if heating curve A and B is selected, target supply water temperature is shown in full line and dotted line respectively.

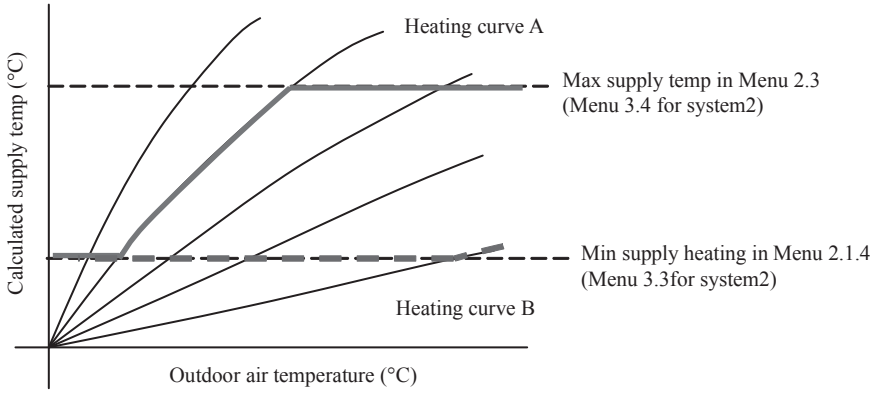

Water temperature control when deviated from the target

When the DM value is significantly small, supply water temperature must be controlled higher than target temperature to reduce the deficit of DM value. However, too big overshoot of the supply temperature will affect comfort.

In order to control the supply water temperature to avoid fluctuation of room temperature, overshoot limit is set in Menu 9.6.7 (Max diff flow-cFlow). Once the supply water temperature reaches the threshold of Menu 9.6.7, thereafter the compressor speed is controlled so that the supply water temperature is kept below the overshoot limit.

For details, see the timing chart on page 134.

Heating thermo-ON / OFF control

The control by DM value is the basic principle to operate/stop the outdoor unit operation.

DM (Degree-Minutes) value

DM value is integrated value of the gap between the target and actual supply water temperature.

Compressor required speed and electric heater ON/OFF are controlled by the DM value.

DM value is limited from +100 to DM start add. heat (Menu 9.2.1) and does not exceed the limit.

Operation state transition according to DM value

According to the DM value, operating state is changed.

Default of DM start heating value (Menu 9.1.1) is -60.

Default of DM start add. heat value (Menu 9.2.1) is -400.

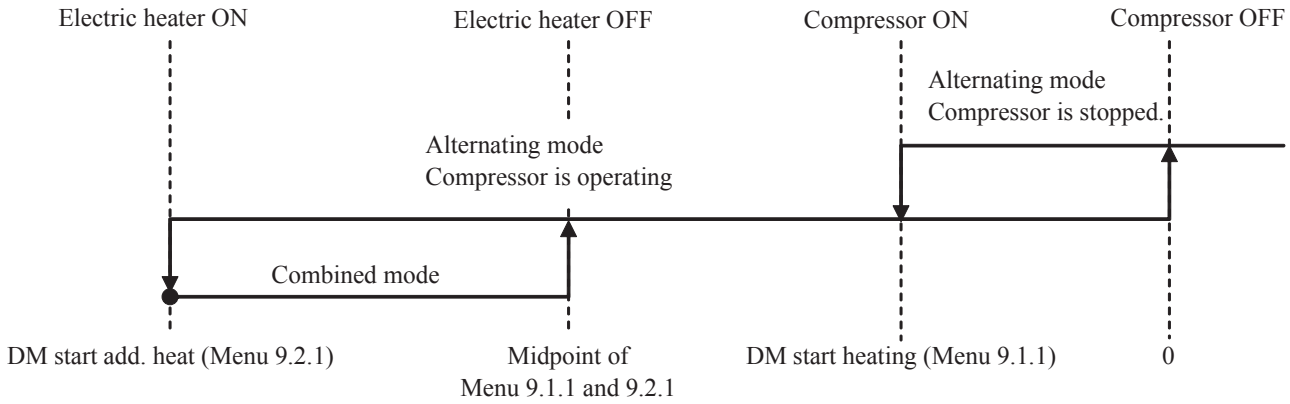

Alternating mode

It implements heating operation only with the outdoor unit. The outdoor unit starts when the DM value becomes DM start heating set at Menu 9.1.1 or lower.

If hot water demand increases and tank water temperature (BT6) lowers below the set value in Menu 1.3, operation state will switch to hot water operation. For details, see Hot water operation control.

Combined mode

The system goes into Combined mode only when the electric heater is allowed to use in Menu 8.2.1.

Hot water in tank is used for heating to cover the excess heat load.

Electric heater in the tank is energized, and the target tank water temperature is set at +2°C of heating curve or target tank water temperature for hot water (set on Menu 1.5), whichever is higher.

Opening degree of mixing valve QN11 is adjusted so that the supply water temperature to the climate system will be -1°C of heating curve.

Note : Electric heater can be replaced with external heat source of the docking feature. See Menu 8.2.1, 8.2.2 and 9.2.8 for setting.

Exceptional processing of DM value

In case the actual supply water temperature BT2 deviates from the target temperature drastically, DM value is sometimes forcibly overwritten to make the water temperature close to the target quickly.

Forced outdoor unit operation

In case the actual supply water temperature is lower than the target temperature and the gap is bigger than the value set in Menu 9.3.12 (Supply temp diff) when the outdoor unit is not operating, the DM value is overwritten to smaller value than in Menu 9.1.1 by 1, which results in starting the outdoor unit operation immediately.

For details, see timing chart on page 134.

Forced combined mode operation

In case the actual supply water temperature is lower than the target temperature and the gap is bigger than the value set in Menu 9.3.12 plus 9.3.13 (Diff HP add. heat) during Alternating mode operation, the DM value is overwritten to bigger value than in Menu 9.2.1 by 1, which result in going into combined mode operation earlier.

For details, see timing chart on page 134.

Forced outdoor unit stop

In case the actual supply water temperature is higher than the target temperature and the gap is bigger than the value set in Menu 9.3.12 when the outdoor unit is operating, the DM value is overwritten to 1, which results in stopping the outdoor unit operation immediately if there is no hot water demand.

Exceptional compressor speed control

Forced minimum compressor speed operation

When the compressor starts, the request frequency is set at minimum for certain period. The period can be set in Menu 9.6.5.

This control is cancelled when (1) the set time has elapsed, or (2) DM value gets significantly low.

Supply water temperature control in coonling

Principle such as cooling curve, cooling curve offset and upper/lower limit is the same as heating operation.

Target supply water temperaure can be checked inMenu 2.0.

Cooling curve can be chosen in Menu 2.2.2

Cooling curve

Cooling curve is the basic principle to decide the target supply water temperature for cooling.

The higher the outdoor air temperature (BT1) becomes, the lower the target supply water temperture becomes, and the characteristics can be adjusted in Menu 2.2.2.

The figure below shows the characteristics of cooling curve. When cooling curve 1 is chosen, target supply water temperature is around 16°C at 35°C outdoor air temperature condition.

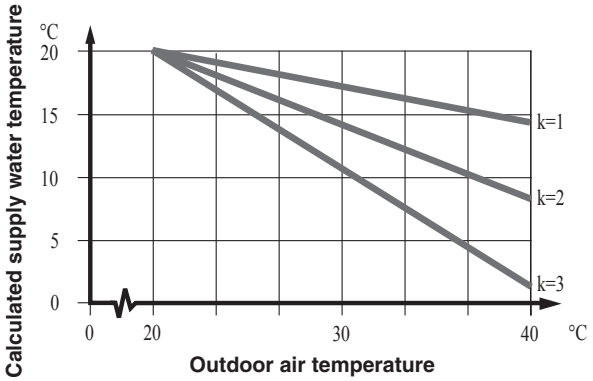

Upper/Lower limit of the supply water temperature

Regardless of the cooling curve setting and the outdoor air temperature, target supply water temperature can not exceed the min/max supply water temperature set in Menu 2.2.4 and 2.3.

Upper and lower limit is set after various offset correction.

Water temperature control when deviated from the target

When the DM value is signif icantly big, supply water temperature must be controlled lower than target temperature to reduce the surplus of DM value. However, too big overshoot of the supply temperature will affect comfort.

In order to control the supply water temperature to avoid f luctuation of room temperatre, overshoot limit is set in Menu 9.6.7 (Max diff f low-cFlow). Once the supply water temperature reaches the threshold of Menu 9.6.7, thereafter the compressor speed is controlled so that the supply water temperature is kept above the overshoot limit.

Cooling thermo-ON / OFF control

Principle of the control such as DM value is the same as heating operation.

DM (Degree-Minutes) value

DM value is limited from -100 to +400 and does not exceed the limit.

Operation state transition according to DM value

According to the DM value, operating state is changed.

Default of DM start cooling value (Menu 9.1.2) is +60.

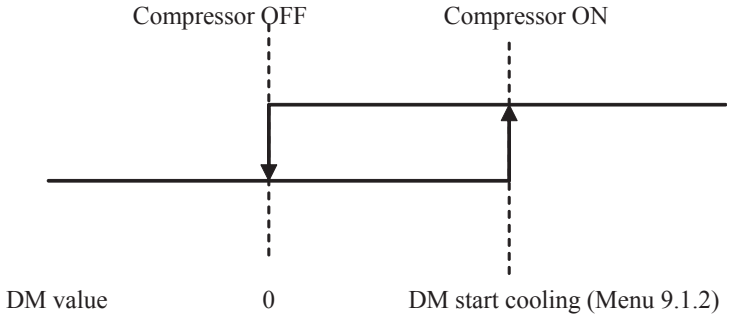

Exceptional processing of DM value

Forced outdoor unit operation

In cooling mode, there is no exceptional DM value processing to operate the outdoor unit according to the gap between target and actual supply water temperature.

Forced outdoor unit stop

In case the actual supply water temperature is lower than the target temperature and the gap is bigger than the value set in Menu 9.3.12 when the outdoor unit is operating, the DM value is overwritten to -1, which results in stopping the outdoor unit operation immediately.

Exceptional compressor speed control

Forced minimum compressor speed operation

When the compressor starts, the request frequency is set at minimum for certain period. The period can be set in Menu 9.6.5.

The control is cancelled when (1) the set time has elapsed, or (2) DM value gets significantly high.

Hot water operation control

Hot water operation is prioritized over heating and cooling.

ON/OFF control

Regardless of the DM value, hot water operation when tank water temperature (BT6) lowers below Start temp HW in Menu 1.2. It finishes when the tank water temperature reaches Stop temp HW in Menu 1.3.

In case there are demands for both hot water and heating/cooling, there is a case that the operation finishes although the tank temperature doesn't reach the threshold. For details, see Hot water operation during alternating mode

Pump speed is controlled so that higher temperature water can be returned to the tank.

Compressor speed control

During the hot water operation, compressor speed is controlled according to the map linked with the outdoor air temperature. The map can be changed with the setting in Menu 1.11.3 and 1.11.4

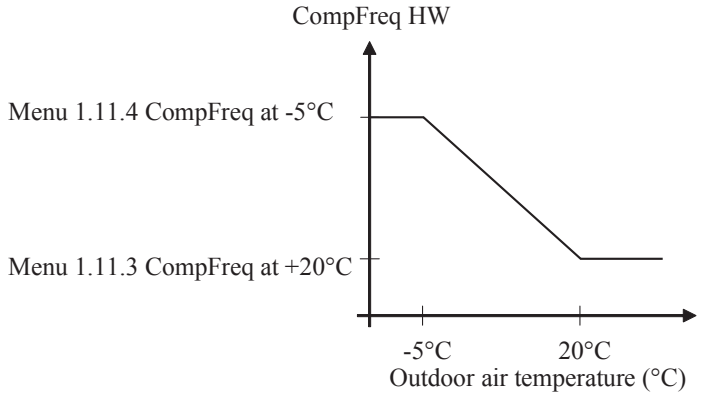

Hot water operation during alternating mode

When there are demands for both hot water and heating, the operation is switched between heating state and hot water state in order to cover both demands.

Operation time ratio between heating state and hot water state can be set in Menu 8.5.1 (Period time) and 8.5.2 (Max time for HW).

Menu 8.5.2 shows the operation duration for hot water and the rest of the time Menu 8.5.1-8.5.2 is for heating.

As long as both heating and hot water demands remain, in other words the conditions to finish both operations are not fulfilled, both operations appear in turn according to the duration of which is set in the menu.

If either condition to finish heating or hot water operation is fulfilled, another operation will be done thereafter unless both demands come up again.

Hot water operation during cooling mode

There are two different ways to produce hot water during cooling and it can be chosen by the setting of electric heater use in Menu 8.2.1 (Allow add. heat).

If the electric heater is allowed to use (Cool or Heat+Cool in setting), hot water production is done by electric heater.

If it is not allowed (Off or Heat in setting), hot water production is done by the outdoor unit.

Defrost operation

When frost accumulates on the surface of the outdoor heat exchanger, defrost operation starts to remove it.

For detailed operation condition, see outdoor unit control.

During defrost operation, indoor unit operates as follows in order to extract heat from the heating system;

- Shunt valve QN11 and ball valve QM 30 and 31 are towards heating system.
- Circulation pump GP1 keeps operating

In case the return water temperature (BT3) does not reach the threshold value defined in Menu 9.1.11, the ball valves QM30 and 31 switch towards hot water to extract heat from the tank.

Still the return water temperature is lower than the threshold, electric heater starts energized.

Timing chart of DM value and supply water temperature

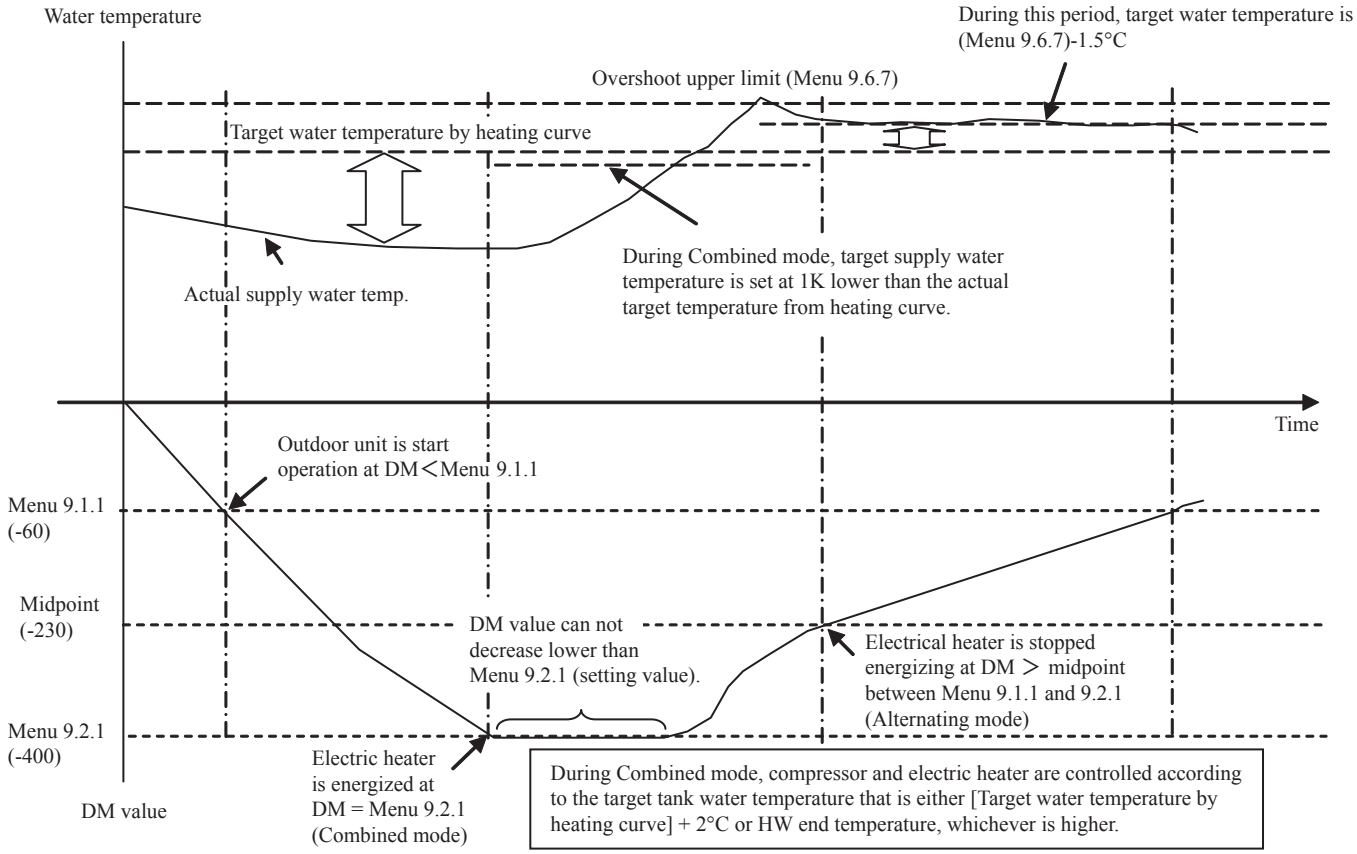

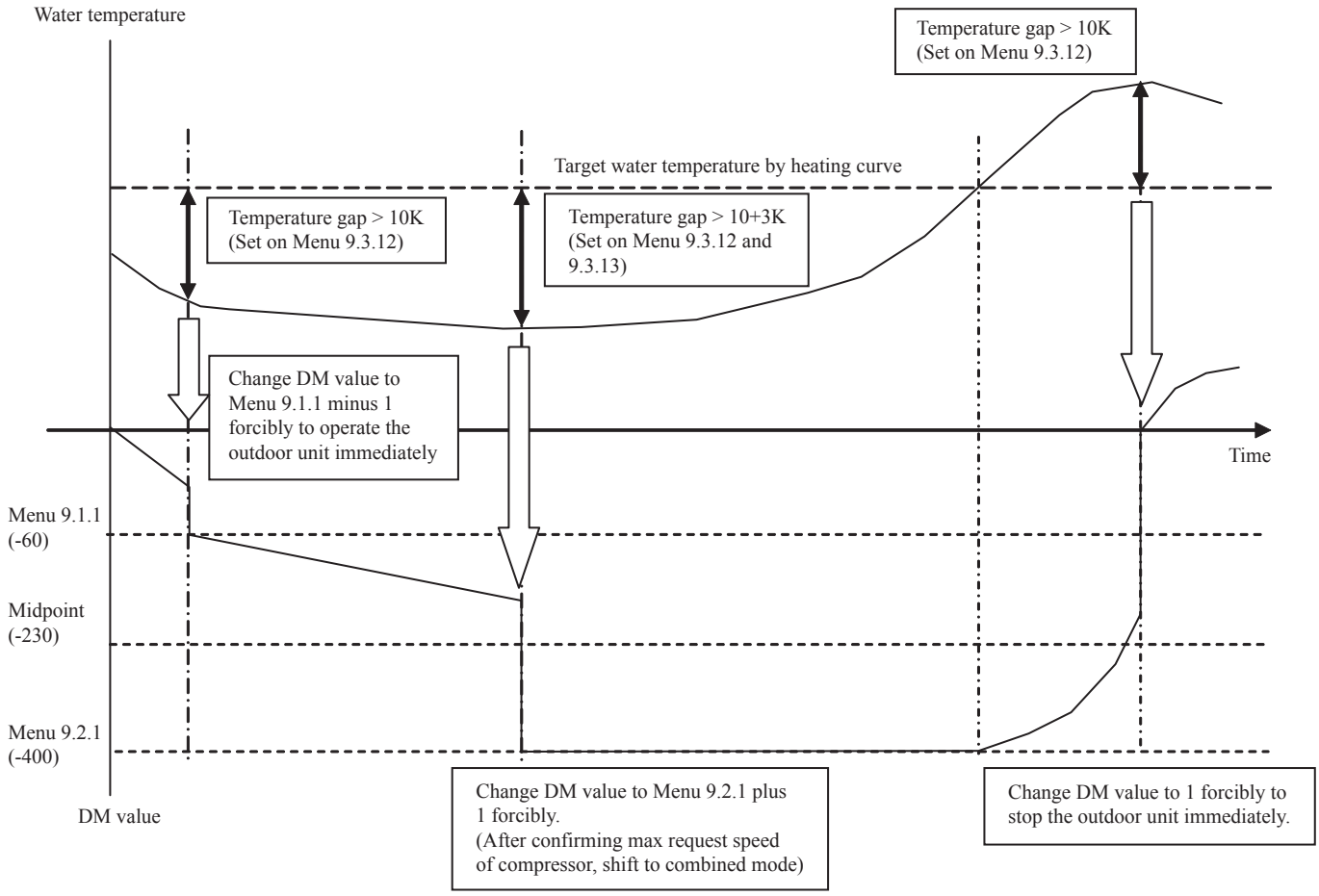

Protection control

Current protection

1) Maximum current limit control for the outdoor unit (by indoor unit control)

When the operation current of the outdoor unit comes close to the limit, request compressor speed is retained in order to keep the current.

If the current exceeds the threshold set in Menu 9.1.10, request compressor speed is reduced.

2) Maximum current limit control for electric heater or other heat source

This function is available for 3phase connection only.

If the current on L1 or L2 exceeds the limit, heater output is reduced once every 5 seconds until the current drops to the normal level.

If the current on L3 exceeds the limit, compressor speed is reduced by 6rps every 30 seconds until the current drops to the normal level.

Freeze protection of water heat exchanger

This function can be activated on Menu 9.3.17

(1) In cooling mode

Compressor speed is kept when the low pressure (BP4) reaches 7.5bar, and stopped when it reaches 6.5bar for 20 seconds. Operation is automatically restarted when it reaches 8.3bar and the supply water temperature becomes 14°C or higher, but it will permanently stop if the protection is activated for 3 times within an hour.

(2) In defrosting mode

Compressor stops when the low pressure (BP4) reaches threshold value depending on water temperature.

After stopping, the system automatically restarts with heating mode but the period to prohibit defrost is reduced to 15 minutes.

When the above action is repeated for 10 times, the system stops and error code is displayed.

Low condenser out

Compressor stops when the supply temperature (BT12) becomes below 5°C.

Compressor automatically restarts when the supply temperature (BT12) becomes above 14°C, but it will permanently stop if the protection is activated for 3 times within an hour.

Operation control function by the outdoor unit controller

Determination of compressor speed (frequency)

1) Maximum and minimum frequency under normal operating conditions

(rps)

Model	FDCW71VNX		FDCW100VNX		FDCW140VNX	
Operation mode	Cooling	Heating	Cooling	Heating	Cooling	Heating
Maximum frequency	86	118	80	85	77	120
Mimimum frequency	20	20	20	25	20	20

2) Maximum required frequency under high outdoor air temperature condition
Maximum required frequency is limited according to the outdoor air temperature (Tho-A)

(rps)

Model		FDCW71VNX	FDCW100VNX	FDCW140VNX
Cooling mode	40 < Tho-A ≦ 46°C	67	75	75
	46°C < Tho-A	60	75	70
Heating mode	-2 < Tho-A ≦ 18°C	81	85	85
	18°C < Tho-A	74	60	85

3) Maximum frequency under high condensing saturated temperature (CST) in heating mode.
Maximum frequency is limited according to the condensing saturated temperature.

(rps)

Model		FDCW71VNX	FDCW100VNX	FDCW140VNX
Heating mode	A rps	100	–	100
	B rps	–	–	95

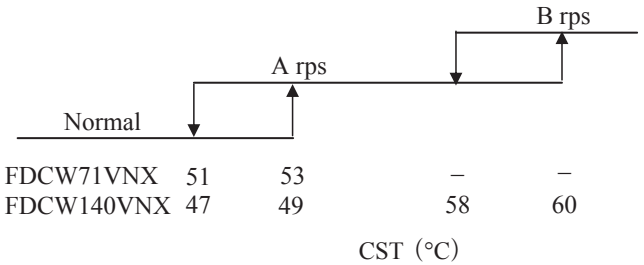

4) Minimum required frequency under high condensing saturated temperature condition.
According to the outdoor heat exchanger temperature (Tho-R) , minimum required frequency in cooling mode is changed as per A or B in below table.
And according to the condensing saturated temperature (CST) detected by indoor unit pressure sensor (BP4) or liquid pipe temperature (Thi-L) detected by indoor unit temperature sensor (BT15), whichever is higher, minimum required frequency in heating mode is changed as per C or D in below table.

(rps)

Model		FDCW71VNX	FDCW100VNX	FDCW140VNX
Cooling mode	A rps	30	–	30
	B rps	40	–	40
Heating mode	C rps	30	25	30
	D rps	40	35	40

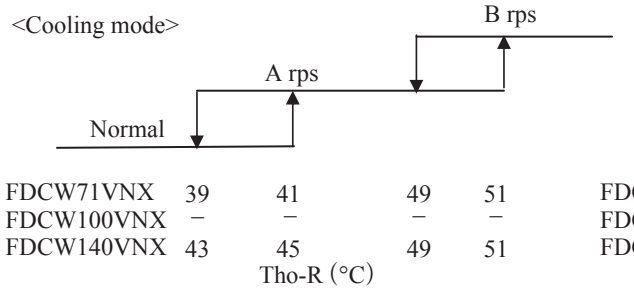

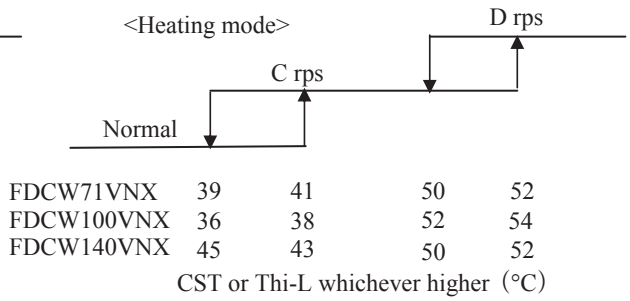

5) Minimum required frequency adjustment under outdoor air temperature (Tho-A) condition
According to the outdoor air temperature, minimum required frequency is offset by as per below table.

Model		FDCW71VNX	FDCW100VNX	FDCW140VNX
Cooling mode	A1	0		
	A2	+15		
Heating mode	A3	0	0	0
	A4	0	+10	+5
	A5	+10	+20	+15
	A6	+20	+30	+25

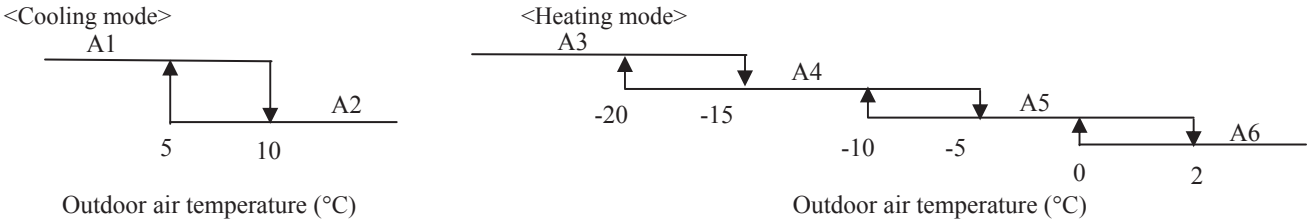

6) When any of the controls from 1) - 5) above may duplicate, whichever the smallest value among duplicated controls is taken as the maximum required frequency, and whichever the biggest value is taken as the minimum required frequency.

Compressor start control

1) Compressor starts upon receipt of the thermostat ON signal from the indoor unit
2) However, at initial start-up after turning the power circuit breaker on, the compressor may enter the standby state for maximum 30 minutes in order to prevent from dry-up of oil in the compressor.

Compressor soft start control

1) Compressor protection start I
[Control condition] Normally, the compressor operation frequency is raised in following start pattern.
[Control contents]
   a) Start the compressor at **55** rps as target frequency.
   For FDCW100VNX, when the outdoor air temperature (Tho-A) is 35°C or higher during cooling or inlet water temperature (Twin) is 48°C or higher and outdoor air temperature is 0°C or higher during heating, it starts at **C** rps.
   b) For FDCW71VNX and FDCW140VNX, compressor speed acceleration finishes when the pressure difference becomes bigger than 0.34MPa in heating or when the low pressure reaches 0.8MPa in cooling.
   c) At 30 seconds after starting compressor, the target frequency changes to **A** rps and compressor is kept operation at **A** rps as fixed frequency for **B** minutes.

Model	Operation Mode	A rps	B min	C rps
FDCW71VNX	Cooling	20	4	–
	Heating	40	4	–
FDCW100VNX	Cooling	55	4	30
	Heating	55	2	30
FDCW140VNX	Cooling	20	4	–
	Heating	40	4	–

2) Compressor protection start II
[Control condition] The initial start-up of compressor after turning the power supply ON
[Control contents] According to the operation mode and the outdoor air temperature (Tho-A), the outdoor unit starts the compressor with the following control.
   a) It starts the compressor at 55rps as target frequency.
   For FDCW100VNX, when the outdoor air temperature (Tho-A) is higher than 35°C in cooling or Twin is 48°C or higher in heating, it starts at **C** rps.
   b) For FDCW71VNX and FDCW140VNX, compressor acceleration finishes, when pressure difference becomes bigger than 0.34MPa in heating or the low pressure becomes 0.8MPa in cooling

c) At 30 seconds after starting compressor, the target frequency changes to **A** rps and the compressor is kept operation at **A** rps as fixed frequency for **B** minutes

Model	Operation Mode	A rps	B min	C rps
FDCW71VNX	Cooling	20	10	–
FDCW100VNX	Cooling	55	10	30
FDCW140VNX	Cooling	20	10	–

3) Compressor protection start III (For FDCW71VNX and FDCW140VNX)
[Control condition] In case all of the following conditions are fulfilled
a) Restarting the compressor in heating mode after 2 hours or longer stop of compressor.
b) The outdoor air temperature at restart is lower than 0°C.
[Control contents]
a) It starts the compressor at 55rps as target frequency.
b) Compressor acceleration finishes, when pressure difference becomes bigger than 0.34MPa
c) At 30 seconds after starting compressor, the target frequency changes to **A** rps and the compressor is kept operation at **A** rps as fixed frequency for **B** minutes

Model	Operation Mode	A rps	B min
FDCW71VNX	Cooling	40	15

Outdoor fan control

1) Outdoor fan speed
a) Upper limit
① FDCW100VNX

Model	Operation Mode	Fan speed (rpm)
FDCW100VNX	Cooling	870
	Heating	740

② FDCW71VNX and FDCW140VNX
According to the relation between the heat exchanger temperature and outdoor air temperature, maximum fan speed is limited as follows.
i) Cooling
FDCW71VNX (rpm)

Tho-A / Tho-R	A'	A	B	C
a	850	850	850	710
b	850	850	710	600
c	710	710	600	400
d	600	600	400	200

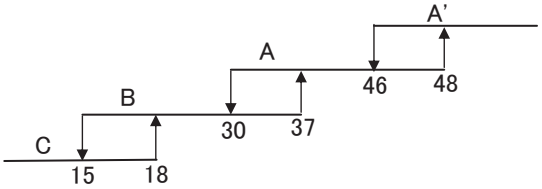

Outdoor air temperature (°C)

FDCW140VNX (rpm)

Tho-A / Tho-R	A'	A	B	C
a	745	745	745	640
b	745	745	640	560
c	640	640	560	370
d	560	560	370	200

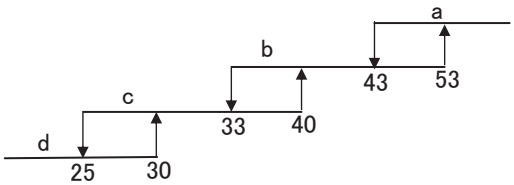

Heat exchenger temperature (°C)

ii) Heating
FDCW71VNX (rpm)

Tho-A / Tho-R	A'	A	B
a	850	850	850
b	850	850	710
c	710	710	600

FDCW140VNX (rpm)

Tho-A / Tho-R	A'	A	B
a	850	850	850
b	850	850	710
c	710	710	600

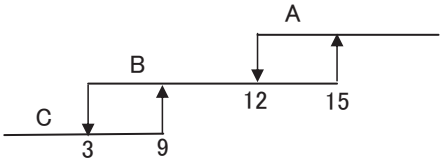

Outdoor air temperature (°C)

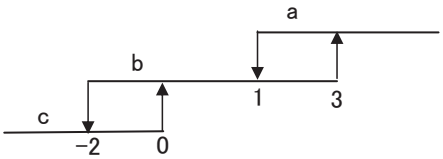

Heat exchenger temperature (°C)

b) Lower limit

Model	Operation Mode	Min.rpm
FDCW71VNX	Cooling	130
	Heating	390
FDCW100VNX	Cooling	130
	Heating	390
FDCW140VNX	Cooling	130
	Heating	370

2) Fan speed control during cooling operation
Fan speed is controlled every 15 seconds according to the outdoor heat exchanger temperature (Tho-R1,-R2), whichever the higher.

Tho-R	Fan speed
Less than 30°C	Reduced by 10 rpm
30°C or higher but 45°C or lower	Retained
Higher than 45°C	Increased by 10 rpm

3) Fan speed control during heating operation
According to the outdoor air temperature (Tho-A), fan speed control is switched between A and B.

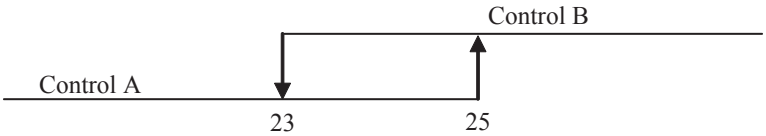

Outdoor air temperature (°C).

[Control A]
Fan speed is controlled every 15 seconds according to the difference between the outdoor air temperature (Tho-A) and the outdoor heat exchanger temperature (Tho-R1,-R2), whichever the higher.

(Tho-A)-(Tho-R)	Fan speed
Less than 3degC	Reduced by 10 rpm
3degC or more but 6degC or less	Retained
More than 6degC	Increased by 10 rpm

[Control B]
Fan speed is controlled every 15 seconds according to the low pressure (LPT).

LPT	Fan speed
More than 1.1MPa	Reduced by 10 rpm
1.0MPa or more but 1.1MPa or less	Retained
Less than 1.0MPa	Increased by 10 rpm

4) Snow protection fan control
If the dip switch (SW3-2) on the outdoor control PCB is turned ON, the outdoor fan is operated for 30 seconds at 740rpm once in every 10 minutes according to outdoor air temperature (Tho-A) shown in below figure in the stop mode or anomalous stop mode.

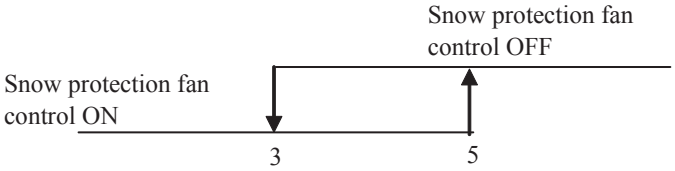

Outdoor air temperature (°C)

Defrosting

1) Defrosting start conditions
If all of the following defrosting condition A or condition B are met, the defrosting operation starts.
   a) Defrosting conditions A
      i) Cumulative compressor operation time after the end of defrosting has elapsed 37 [45] minutes (15 minutes in case the previous defrost operation is forcibly finished by indoor unit protection control) and the cumulative compressor operation time after the start of heating operation has elapsed 30 minutes
      ii) After 5 minutes from the compressor ON.
      iii) After 5 minutes from the start of outdoor fan.
      iv) After satisfying all above conditions, if the outdoor heat exchanger temperature (Tho-R1, Tho-R2, whichever the lower) and the outdoor air temperature (Tho-A) become lower than the defrosting start temperature as shown in Fig 4-1 for 15 seconds continuously. Or suction gas saturated temperature (SST), which is detected by the low pressure sensor (LPT), and the outdoor air temperature (Tho-A) stay for 3 minutes within the temperature range lower than the defrosting operation start temperature as shown Fig 4-2. However it is not effective during 10 minutes after the start of compressor and if the outdoor air temperature is within the range of LPT invalid as shown in below figure.

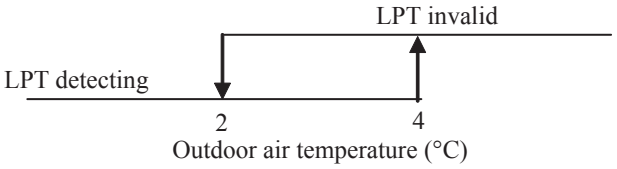

Note: Figure in [ ] is for model 71.

Model 71-140

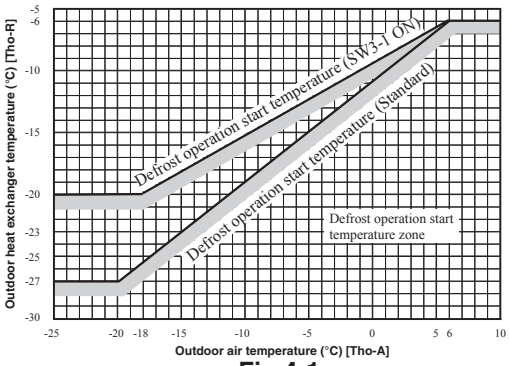

Fig 4-1

Model 71-140

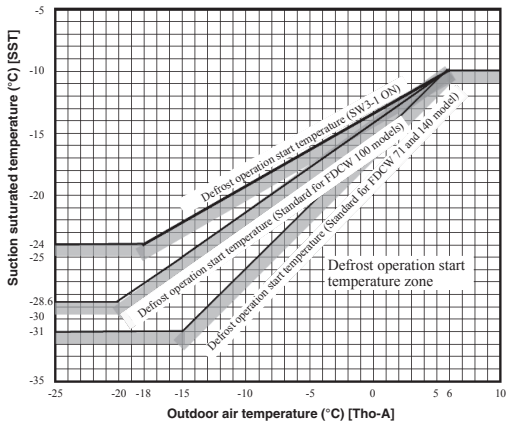

Fig 4-2

   b) Defrosting conditions B
      i) If the previous defrosting was ended compulsorily due to the time out of defrosting operation period and cumulative compressor operation time after the end of defrosting has elapsed 30 minutes and operation mode is kept heating.
      ii) After 5 minutes from the compressor ON.
      iii) After 5 minutes from the start of outdoor fan.

2) Defrosting end conditions
When any of following conditions is satisfied, the defrosting operation is ended.
   a) When it has elapsed 8 minutes and 20 seconds after the start of defrosting. (After 10 minutes and 20 seconds for model 71)
   b) When the outdoor heat exchanger temperatures (Tho-R1, Tho-R2) , whichever the lower, becomes 12°C or higher continuously for 10 seconds.

3) Switching of defrosting control with SW3-1
   a) If the dip switch SW3-1 on the outdoor control PCB is turned ON, it makes earlier to enter the defrosting operation. Use this function, if installing the unit in snowing region.
   b) Control contents
      i) It allows entering defrosting operation under the defrosting condition A when the cumulative heating operation time has elapsed 30 minutes. It is 37 [45] minutes at SW3-1 OFF (factory default)
      ii) It allows entering defrosting operation under the defrosting condition B when the cumulative heating operation time has elapsed 20 minutes. It is 30 minutes at SW3-1 OFF (factory default)
      iii) It allows entering defrosting operation when the outdoor heat exchanger temperature (Tho-R) and the suction pressure saturated temperature (SST) are higher than normal.
      Note (1) Figure in [ ] is for model 71.

Protective control/ anomalous stop control by compressor speed (frequency)

1) Compressor discharge pipe temperature protection
   a) Protective control
   If the discharge pipe temperature (detected with Tho-D) exceed the setting value, the compressor speed (frequency) is controlled in order to suppress the rise of discharge pipe temperature.

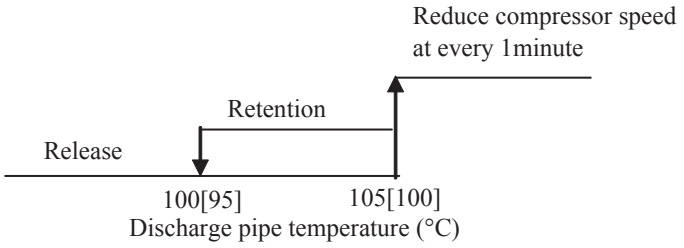

   Note (1) Figures in [ ] are for model 140.
   b) Anomalous stop control
      i) If the discharge pipe temperature (detected with Tho-D) exceed the setting value, the compressor stops.
      ii) When the discharge pipe temperature anomaly is detected 2 times within 60 minutes or 60 minutes continuously including the time of compressor stopping, discharge pipe temperature error is displayed and E36 is recorded in Error Log and it enters the anomalous stop mode.

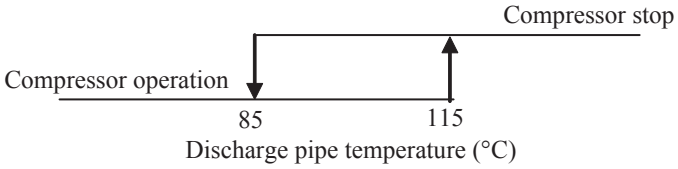

   c) Reset of anomalous stop mode
   When the discharge pipe temperature drops to the reset value of 85°C or lower for 45 minutes continuously, it becomes possible to restart from controller

2) Cooling high pressure protection
   a) Protective control
      i) When the outdoor air temperature (Tho-A) is 40°C or higher and the outdoor heat exchanger temperature (Tho-R) exceeds setting value, the compressor speed (frequency) is controlled in order to suppress the rise of high pressure.
      ii) The control value A is updated to an optimum value automatically according to the operating conditions

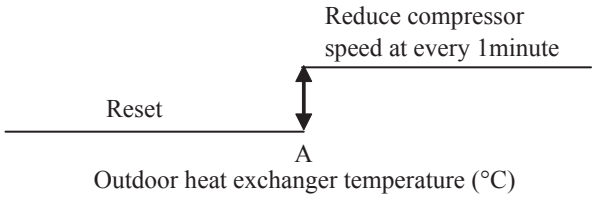

Control value A
54-60°C

   b) Anomalous stop control
      i) If the outdoor heat exchanger temperature (Tho-R) exceeds the setting value, the compressor stops.
      ii) When the outdoor heat exchanger temperature anomaly is detected 5 times within 60 minutes, or 60 minutes continuously including the time of compressor stopping, cooling overload error is displayed and E35 is recorded in the Error Log and it enters the anomalous stop mode.

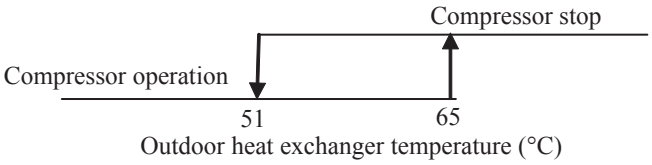

   c) Reset of anomalous stop mode
   When the outdoor heat exchanger temperature drops to the reset value of 51°C or lower, it becomes possible to restart from the controller.

3) Heating high pressure protection
   a) Protective control
      i) If the liquid line temperature of water heat exchanger (BT15=Thi-L) or the condensing saturated temperature (CST), whichever the higher, exceeds the setting value, the compressor speed (frequency) is controlled to suppress the rise of high pressure.
      ii) Control value A is updated to an optimum value automatically according to the operating conditions.

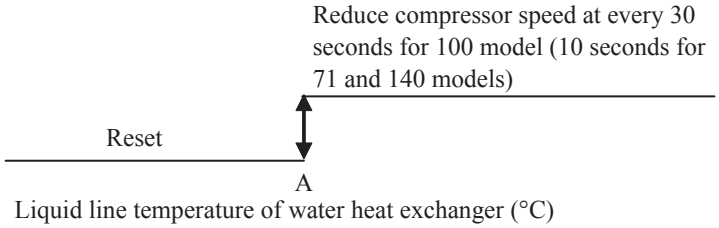

Model	Control value A
FDCW71VNX	60-63°C
FDCW100VNX	60°C
FDCW140VNX	60-63°C

   b) Anomalous stop control
      If the liquid line temperature of water heat exchanger (BT15=Thi-L) or the condensing saturated temperature (CST), whichever the higher, exceeds the setting value for 2 seconds, compressor stops.
      The compressor automatically restarts when the temperature gets 47°C or lower.

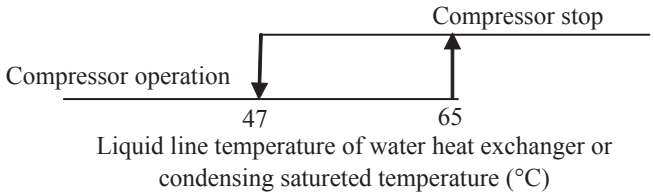

4) Anomaly detection control by the high pressure switch (63H1)
   i) If the high pressure rises and activates the high pressure switch (opens at 4.15MPa/close at 3.15MPa), the compressor stops.
   ii) Under any of following conditions, HP alarm is displayed and E40 is recorded in the Error Log, and it enters the anomalous stop mode.
      ① When high pressure exceeds the setting value and the compressor is stopped by 63H1 5 times. within 60 minutes.
      ② When 63H1 has been in the open state for 60 minutes continuously including the time of compressor stopping.

5) Low pressure control
   a) Protective control
      If the value detected by the low pressure sensor (LTP) exceeds the setting value, the compressor speed (frequency) is controlled to restrain the drop of pressure.

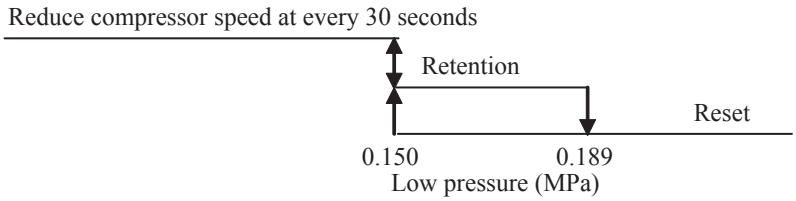

   b) Anomalous stop control
      i) When a value detected by the low pressure sensor (LPT) satisfies any of the following conditions, compressor stops.
         ① When the low pressure drops to 0.079MPa or lower for 15 seconds continuously.
      ii) Under any of the following conditions, LP alarm is displayed and E49 is recorded in Error Log, and it enters the anomalous stop mode.
         ① When the low pressure drops and the compressor stops under any of above conditions 3 times within 60 minutes.
         ② When the low pressure sensor detects 0.079MPa for 5 minutes continuously including the time of compressor stopping

③ However, when the control condition ① is established during the control of the compressor protection start Ⅲ, LP alarm is displayed and E49 is recorded in Error Log at the first stop of compressor and it enters the anomalous stop mode.

6) Compressor pressure ratio protection control (FDCW100VNX only)
   a) During heating operation, if the liquid line temperature of water heat exchanger (BT15=Thi-L) or condensing satulated temperature (CST), whichever higher, and the outdoor heat exchanger temperature (Tho-R) exceed the setting value after 10 minutes from compressor ON, the compressor speed (frequency) is controlled in order to protect compressor.
   b) This control is not performed under the following conditions
      (1) Outdoor fan is stopped, or 10 minutes has not elapsed since the outdoor fan starts.
      (2) 10 minutes has not elapsed since defrosting operation finishes.

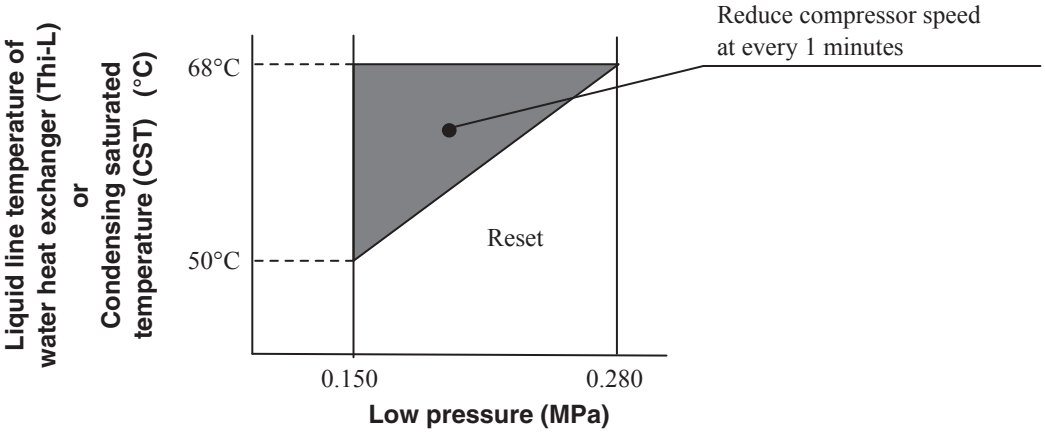

7) Overcurrent protection
   a) Current safe control I
      When the inverter primary current (CT current) reaches following value, the compressor speed is reduced until it gets to the cancellation value.

Model	Operation Mode	Current (A)
FDCW71VNX	Cooling	15
	Heating	16
FDCW100VNX	Cooling	-
	Heating	17
FDCW140VNX	Cooling	23
	Heating	25

   b) Current safe control II
      Detecting the outdoor inverter output (secondary side) current, if the current values exceed setting values, the compressor speed (frequency) is controlled in order to protect the inverter.

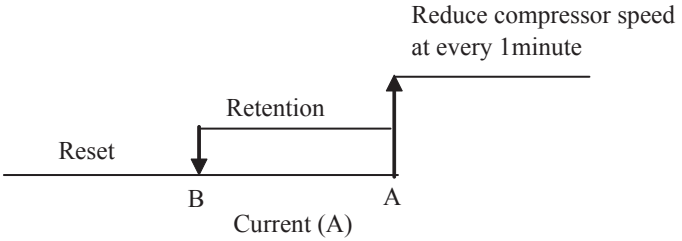

(Fig. C) The control value "A" and the reset value vary depending on the compressor speed.

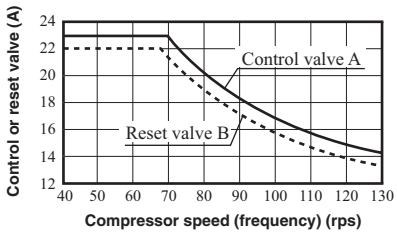

Model	Cooling		Heating	
	Control value A	Reset value B	Control value A	Reset value B
FDCW71VNX	13	12	13	12
FDCW100VNX	Fig -C	Fig -C	Fig -C	Fig -C
FDCW140VNX				

8) Power transistor temperature control (FDCW100VNX, 140VNX only)
This control monitors the power transistor temperature (TIP) from the start operation of compressor, and when the following condition is established, compressor speed (frequency) is controlled.

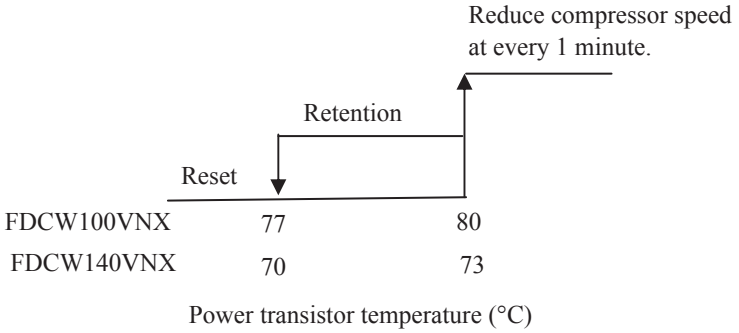

9) Anomalous power transistor current
a) If the current value of power transistor exceeds the setting value, the compressor stops in order to prevent from overcurrent of inverter.
b) When the current value of power transistor exceeds the specified value and compressor stops 4 times within 30 minutes, Inverter error is displayed and E42 is recorded in the Error Log. And it enters the anomalous stop mode.

10) Anomalous inverter PCB
If the power transistor detects any anomaly for 15 minutes including the time of compressor stopping, Inverter error is displayed and E51 is recorded in the Erro Log, and it enters the anomalous stop mode.

11) Anti-freeze control by the compressor frequency control
It depends on the command from indoor unit

12) Refrigerant amount shortage protection
Under the control of compressor protection start Ⅲ during cooling operation, the following control is performed by detecting the liquid line temperature of indoor unit (BT15=Thi-L) and inlet water temperature (BT3=Twin).
[Control condition] When the state that the temperature of indoor unit water heat exchanger (Thi-R=Thi-L) does not become lower than the inlet water temperature (BT3=Twin) by 4°C or more for 1 minute continuously.
[Control contents] It judges that the flowing of refrigerant into the indoor unit is insufficient so that the compressor is stopped and insufficient refrigerant amount error is displayed and E57 is recorded in the Error Log.

13) Broken wire detection on temperature thermistor and low pressure sensor
a) Outdoor heat exchanger temperature thermistor, outdoor air temperature thermistor and low pressure sensor.
If the following is detected for 5 seconds continuously within 2 minutes to 2 minutes 20 seconds after the compressor ON, the compressor stops. After a delay of 3 minutes, the compressor restarts but if the same anomaly is detected repeatedly 3 times within 40 minutes, the compressor stops with the anomalous stop mode.
・Outdoor heat exchanger temperature thermistor (Tho-R1, R2): -50°C or lower
・Outdoor air temperature thermistor (Tho-A): -30°C or lower
・Low pressure sensor (LPT): 0Volt or lower, or 3.49Volt or higher
Note : During defrosting operation and for 3 minutes after the end of defrosting operation, this control is not performed.

b) Discharge pipe temperature thermistor, suction pipe temperature thermistor
If the following is detected for 5 seconds continuously within 10 minutes to 10 minutes 20 seconds after the compressor ON, the compressor stops. After a delay of 3 minutes, the compressor restarts but if the same anomaly is detected repeatedly 3 times within 40 minutes, the compressor stops with the anomalous stop mode.
・Discharge pipe temperature thermistor (Tho-D): -10°C or lower
・Suction pipe temperature thermistor (Tho-S): -50°C or lower
Note : During defrosting operation and for 3 minutes after the end of defrosting operation, this control is not performed.

14) Fan motor error
a) If the outdoor fan speed is detected 100rpm or lower for 30 seconds continuously under the outdoor fan control mode

(with the operation command of fan speed 390rpm or higher), the compressor stops.

b) When the outdoor fan speed drops to 100rpm or lower 5 times within 60 minutes and the compressor stops, Fan alarm is displayed and E48 is recorded in the Error Log and it enters the anomalous stop mode.

15) Anomalous stop by the compressor start/stop

a) When it fails to shift to the rotor position detection operation of compressor DC motor during 5 seconds after establishing the compressor start condition, the compressor stops temporarily and restarts 3 minutes later.

b) If it fails to shift to the rotor position detection operation again at second time, it judged the anomalous compressor start and the compressor stops. Compressor startup failure is displayed and E59 is recorded in the Error Log and it enters the anomalous stop mode.

Pump-down control

It is possible to recover the refrigerant on the piping into the outdoor unit by this function.
Pump-down operation starts when the following conditions are fulfilled.

a) Within ten minutes since the operation mode is changed to Add heat. only mode.
b) SW1 [SW9] on the outdoor unit PCB is pressed for 2 seconds.
[Note]
Pump-down operation doesn't start even though SW1 [SW9] is pressed for 2 seconds, if more than 10 minutes has elapsed since the mode is changed to Add heat. only.
In that case, change the mode other than Add heat. only and set again.
Note (1) Figure in [ ] is for model 71.

1) Control contents

a) Close the operation valve at the liquid side, (the operation valve at gas side should be left open.)
b) The compressor is started with the target speed (frequency) at **A**rps in cooling mode.

Model	A rps
FDCW71VNX	62
FDCW100VNX	55
FDCW140VNX	45

c) Red and green lamps (LED) flash continuously on the outdoor control PCB.
d) Each of protection and error detection controls, excluding the low pressure control, is effective.
e) Outdoor fan is controlled as usual.
f) Electronic expansion valve is fully opened.

2) Control ending conditions

Stop control is initiated depending on any of following conditions

a) Low pressure of 0.087MPa or lower is detected for 5 seconds continuously.
i) Red LED: stays lighting, Green LED: keeps flashing
ii) It is possible to restart when the low pressure is 0.087MPa or higher.
iii) Electronic expansion valve (cooling/heating) is kept fully open..

b) Stop by the error detection control
i) Red LED: keeps flashing, Green LED: keeps flashing
ii) Restarting is prohibited. To return to normal operation, reset the power supply.
iii) Electronic expansion valve (cooling/heating) is kept fully open..

c) When cumulative operation time of compressor under the pump-down control is elapsed 5 minutes.
i) Red LED: stays OFF, Green LED: keeps flashing
ii) It is possible to pump-down again.
iii) Electronic expansion valve (cooling/heating) is kept fully open..

Note : After the stop of compressor, close the operation valve at the gas side.

Alarm list

Alarm with automatic reset

Alarm no.	Alarm text on the display	Triggers alarm	Resets alarm
70	Low condenser out	When condenser supply (BT12) is less than 5°C.	When condenser supply is greater than 14°C.
71	High KF	When condenser supply is greater than 60°C and there are more than 120 seconds since shifting to the heating system.	When condenser supply is lower than 51°C.
72	Anti freeze HX	When the low pressure is less than 6.5 bar in cooling mode.	When the low pressure is greater than 8.3 bar or condenser out is greater than 14 degrees.
73	Freeze prot	When the outdoor temperature drops below 0°C and the operating mode does not permit heating.	When the outdoor temperature rises above 1°C.
75	Current limit	Too high current output from the house.	When the current output decreases.
77	Aborted defrost	When the low pressure is less than threshold value according to water temperature.	Defrost operation is forcibly finished and heating operation restarts automatically.
78	Min flow protection	When the temperature difference between BT12 and BT3 is bigger than predetermined value during defrost operation.	Defrost operation is forcibly finished and heating operation restarts automatically.

Temperature limiter alarm

The following alarm blocks both outdoor unit and electric heater.

Alarm no.	Alarm text on the display	Description	May be due to
3	TB alarm	Temperature limiter in indoor unit has tripped.	- The temperature limiter has tripped during transportation - High temperature in indoor unit - Blown circuit fuse - Tripped miniature circuit breaker Also see the troubleshooting guide on page 151.

Indoor unit alarm

The following alarms stop the operation of indoor unit. Electric heater is activated at min permitted supply temperature.

Alarm no.	Alarm text on the display	Description	May be due to
4	OU power failure	No voltage to the outdoor unit from indoor unit.	- Blown circuit fuse - Tripped miniature circuit breaker Also see the troubleshooting guide on page 152.
5	Low condenser out	Too low temperature out from the condenser. Occurs if alarm 70 occurs 3 times within an hour.	- Low temperature during cooling - Low flow during cooling Also see the troubleshooting guide on page 153.
6	High KF	Too high temperature out from the condenser. Occurs if alarm 71 occurs 3 times with in an hour.	- Low flow in heating operation - Too high set temperatures Also see the troubleshooting guide on page 154.
7	Anti freeze HX	Anti-freeze of heat exchanger. Occurs if alarm 72 occurs 3 times with in an hour.	- Low flow during defrost Also see the troubleshooting guide on page 155.
14	Aborted defrost	Occurs if alarm 70 or 77 occurs 10 times continuously during defrost operation.	- Refrigerant leakage - Inproper installation place of outdoor unit - Insufficient water flow Also see the troubleshooting guide on page 158.

Alarm no.	Alarm text on the display	Description	May be due to
16	Aborted defrost	Occurs if alarm 78 occurs 10 times continuously during defrost operation.	- Insufficient water flow Also see the troubleshooting guide on page 158.
31	S. fault HP	Sensor fault, high pressure (BP4).	- Open-circuit or short-circuit on sensor input - Sensor does not work Also see the troubleshooting guide on page 159.
32	Sensor fault KF	Sensor fault, condensor out (BT12).	- Open-circuit or short-circuit on sensor input - Sensor does not work (see “Temperature sensor” section) Also see the troubleshooting guide on page 160.
33	S. fault Liquid line	Sensor fault, liquid line (BT15).	- Open-circuit or short-circuit on sensor input - Sensor does not work (see “Temperature sensor” section) Also see the troubleshooting guide on page 160.

Outdoor unit alarm

Alarm no.	Alarm text on the display	Description	May be due to
E5	OU Com. error	Communication between the outdoor unit and indoor unit is not made.	- Isolator switch for outdoor unit off - Electrical noise from the other equipment.
E35	High HX temp	Temperature deviation on the hot gas sensor (Tho-R1/R2) five times within 60 minutes or under 60 minutes.	- Sensor does not work (see “Temperature sensor” section) - Insufficient air circulation or blocked heat exchanger - Defective control PCB in outdoor unit - Too much refrigerant Also see the troubleshooting guide on page 161.
E36	Permanent Hotgas	Temperature deviation on the hot gas sensor (Tho-D) two times within 60 minutes or under 60 minutes.	- Sensor does not work (see “Temperature sensor” section) - Blocked filter - Insufficient air circulation or blocked heat exchanger - If the fault persists during cooling, there may be an insufficient amount of refrigerant. -Defective control PCB in outdoor unit Also see the troubleshooting guide on page 162.
E37	S. fault Tho-R	Sensor fault, heat exchanger in outdoor unit (Tho-R).	- Open-circuit or short-circuit on sensor input - Sensor does not work (see “Temperature sensor” section) - Defective control PCB in outdoor unit Also see the troubleshooting guide on page 163.
E38	S. fault Tho-A	Sensor fault, outdoor air sensor in outdoor unit (Tho-A).	- Open-circuit or short-circuit on sensor input - Sensor does not work (see “Temperature sensor” section) - Defective control PCB in outdoor unit Also see the troubleshooting guide on page 164.

Alarm no.	Alarm text on the display	Description	May be due to
E39	S. fault Tho-D	Sensor fault, hot gas in outdoor unit (Tho-D).	- Open-circuit or short-circuit on sensor input - Sensor does not work (see “Temperature sensor” section) - Defective control PCB in outdoor unit Also see the troubleshooting guide on page 165.
E40	HP alarm	The high pressure switch (63H1) is activated 5 times within 60 minutes or under 60 minutes continuously.	- Insufficient air circulation or blocked heat exchanger - Open circuit or short circuit on input for high pressure sensor (63H1) - Defective high pressure sensor - Expansion valve not correctly connected - Service valve closed - Defective control PCB in outdoor unit - Low or no flow during heating operation - Defective circulation pump Also see the troubleshooting guide on page 166.
E42	Inverter error	Voltage from the inverter outside the parameters four times within 30 minutes.	- Incoming power supply interference - Service valve closed - Insufficient amount of refrigerant - Compressor fault - Defective inverter PCB in outdoor unit Also see the troubleshooting guide on page 167.
E45	Inverter error	Communication between PCB for inverter and control PCB broken.	- Open-circuit in connection between PCBs - Defective inverter PCB in outdoor unit - Defective control PCB in outdoor unit Also see the troubleshooting guide on page 168.
E47	Inverter error	Inverter A/F module over current	- Instantaneous power failure Also see the troubleshooting guide on page 169.
E48	Fan alarm	Deviations in the fan speed in outdoor unit.	- The fan must not rotate freely - Defective control PCB in outdoor unit - Defective fan motor - Control PCB in outdoor unit dirty - Fuse (F2) blown Also see the troubleshooting guide on page 170.
E49	LP alarm	Too low value on the low pressure sensor 3times within 60 minutes.	- Open circuit or short circuit on input for low pressure sensor - Defective low pressure sensor - Defective control PCB in outdoor unit - Open circuit or short circuit on input for suction gas sensor (Tho-S) - Defective suction gas sensor (Tho-S) Also see the troubleshooting guide on page 171.
E51	Inverter error	Continuous deviation on power transistor for 15 minutes.	- Defective fan motor - Defective inverter PCB in outdoor unit Also see the troubleshooting guide on page 173.

Alarm no.	Alarm text on the display	Description	May be due to
E53	S. fault Tho-S	Sensor fault, suction gas in outdoor unit (Tho-S).	- Open-circuit or short-circuit on sensor input - Sensor does not work (see “Temperature sensor” section) - Defective control PCB in outdoor unit Also see the troubleshooting guide on page 174.
E54	S. fault LPT	Sensor fault, low pressure sensor in outdoor unit.	- Open-circuit or short-circuit on sensor input - Sensor does not work (see “Temperature sensor” section) - Defective control PCB in outdoor unit - Fault in the refrigerant circuit Also see the troubleshooting guide on page 175.
E57	Low refrigerant	Insufficient refrigerant is detected at initial startup in cooling mode.	- Service valve closed - Loose connection of sensor (BT15 or BT3) - Defective sensor (BT15 or BT3) - Insufficient amount of refrigerant Also see the trouble shooting guide on page 176.
E59	Inverter error	Compressor fails to startup for 14 times (7 patterns × 2 times)	- Defective outdoor fan motor - Defective inverter PCB in outdoor unit - Compressor fault - Incoming power supply interference Also see the trouble shooting guide on page 177.

Hot water alarm

The following alarms block hot water production via outdoor unit. The additional heat source is blocked completely.

Alarm no.	Alarm text on the display	Description	May be due to
8	High HW temp.	Too high temperature (>90°C) on hot water sensor (BT6).	- Contactor to internal electric heater defective - Incorrect external heat source setting Also see the troubleshooting guide on page 156
9	High AH temp.	Too high temperature (>90°C) on immersion heater sensor (BT19).	- Contactor to internal electric heater defective - Incorrect external heat source setting Also see the troubleshooting guide on page 156.
34	S. fault HW	Sensor fault, hot water (BT6).	- Open-circuit or short-circuit on sensor input - Sensor does not work (see “Temperature sensor” section) Also see the troubleshooting guide on page 160.
35	S. fault AH	Sensor fault, immersion heater (BT19).	- Open-circuit or short-circuit on sensor input - Sensor does not work (see “Temperature sensor” section) Also see the troubleshooting guide on page 160.

Supply alarm

The following alarms switch off heating/cooling. Only hot water production is permitted.

Alarm no.	Alarm text on the display	Description	May be due to
10	High VBF1	Too high temperature (>90°C) on flow line sensor, system 1 (BT2).	- Sensor does not work (see “Temperature sensor” section) Also see the troubleshooting guide on page 157.
11	High VBF2	Too high temperature (>90°C) on flow line sensor, system 2.	- Sensor does not work (see “Temperature sensor” section) Also see the troubleshooting guide on page 157.
30	Sensor fault UG	Sensor fault, outdoor temperature (BT1).	- Open-circuit or short-circuit on sensor input - Sensor does not work (see “Temperature sensor” section) Also see the troubleshooting guide on page 160.
36	Sensor fault VBF1	Sensor fault, supply, system1 (BT2).	- Open-circuit or short-circuit on sensor input - Sensor does not work (see “Temperature sensor” section) Also see the troubleshooting guide on page 160.
37	Sensor fault VBF2	Sensor fault, supply, system 2.	- Open-circuit or short-circuit on sensor input - Sensor does not work (see “Temperature sensor” section) Also see the troubleshooting guide on page 160.

Troubleshooting guide

3 - Thermal cutout

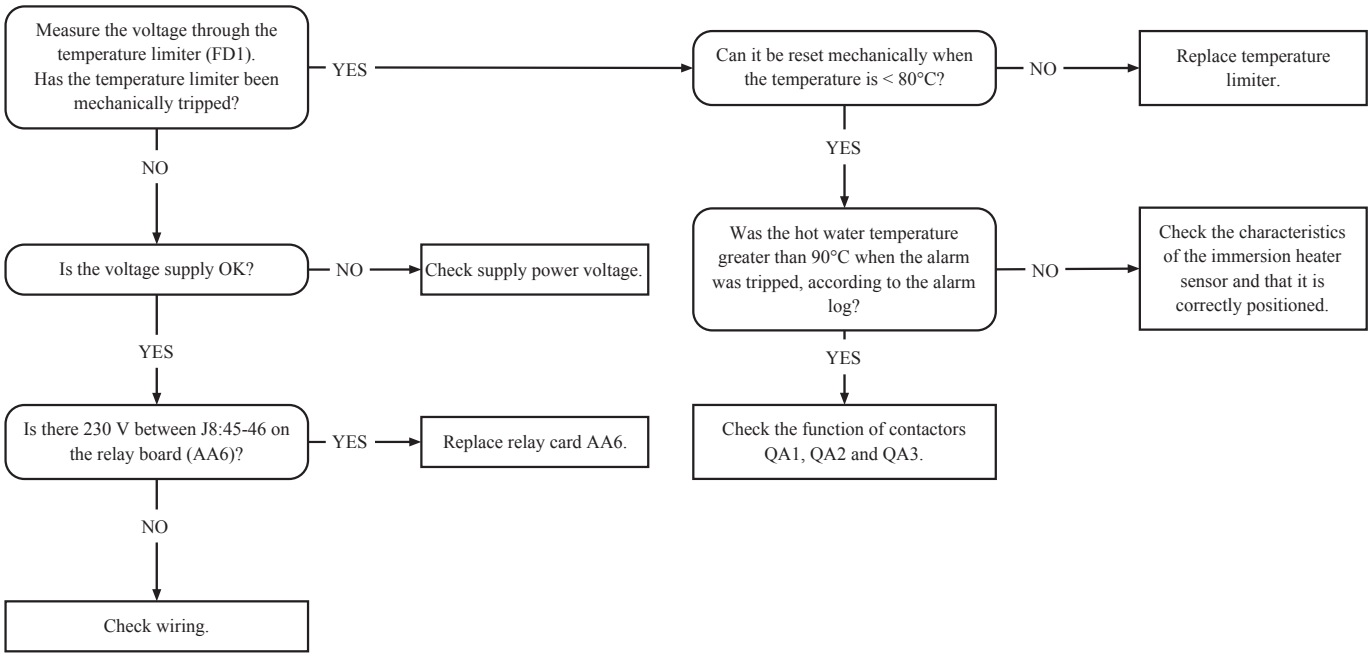

4 - OU power failure

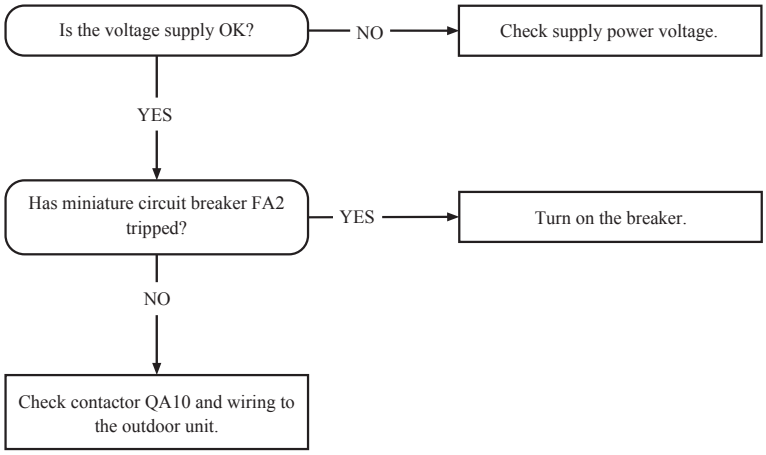

5 - Low condenser out

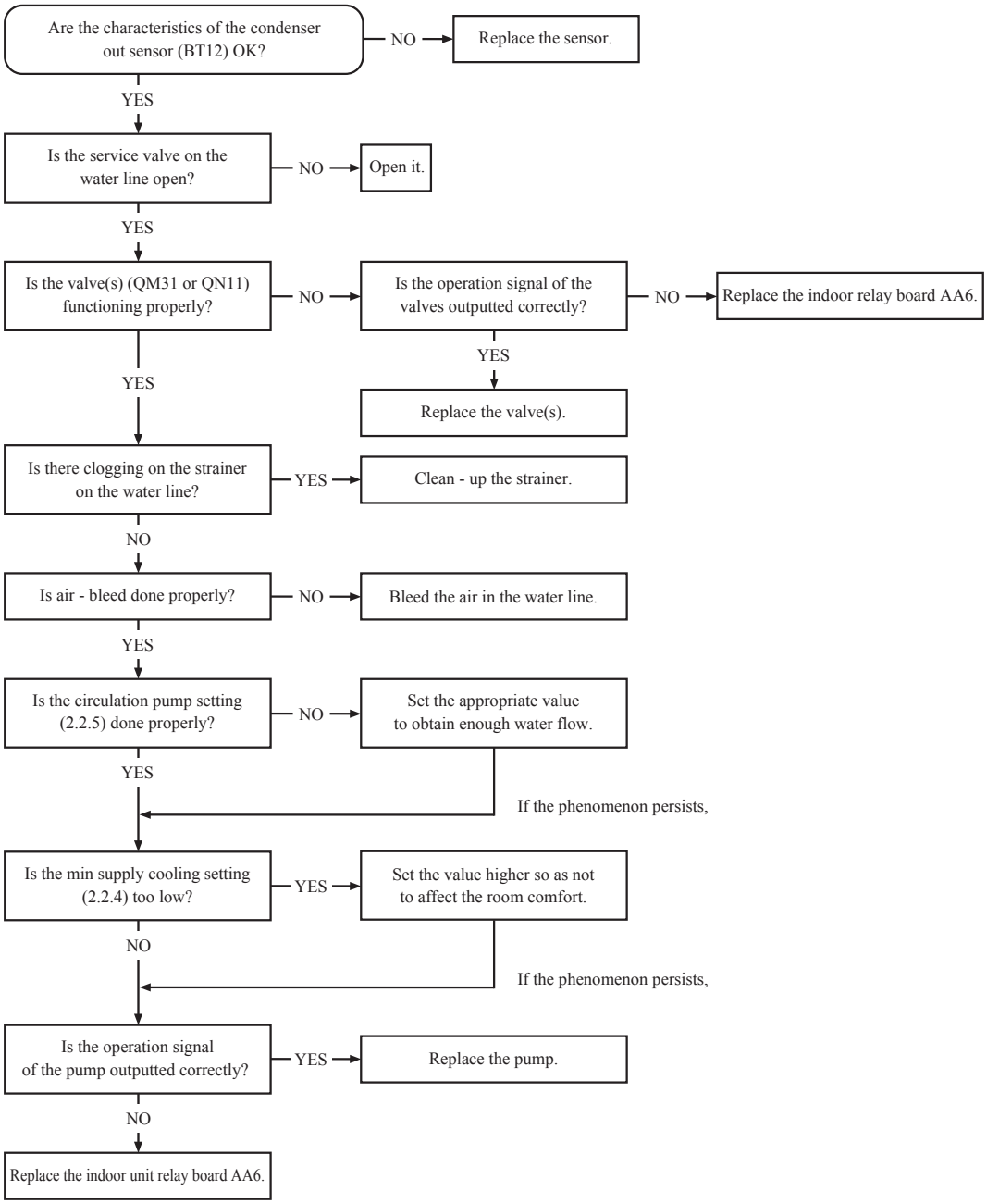

6 - High condenser out

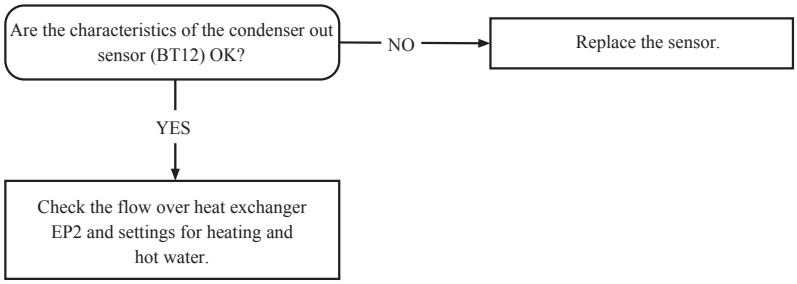

7 - Anti freeze HX

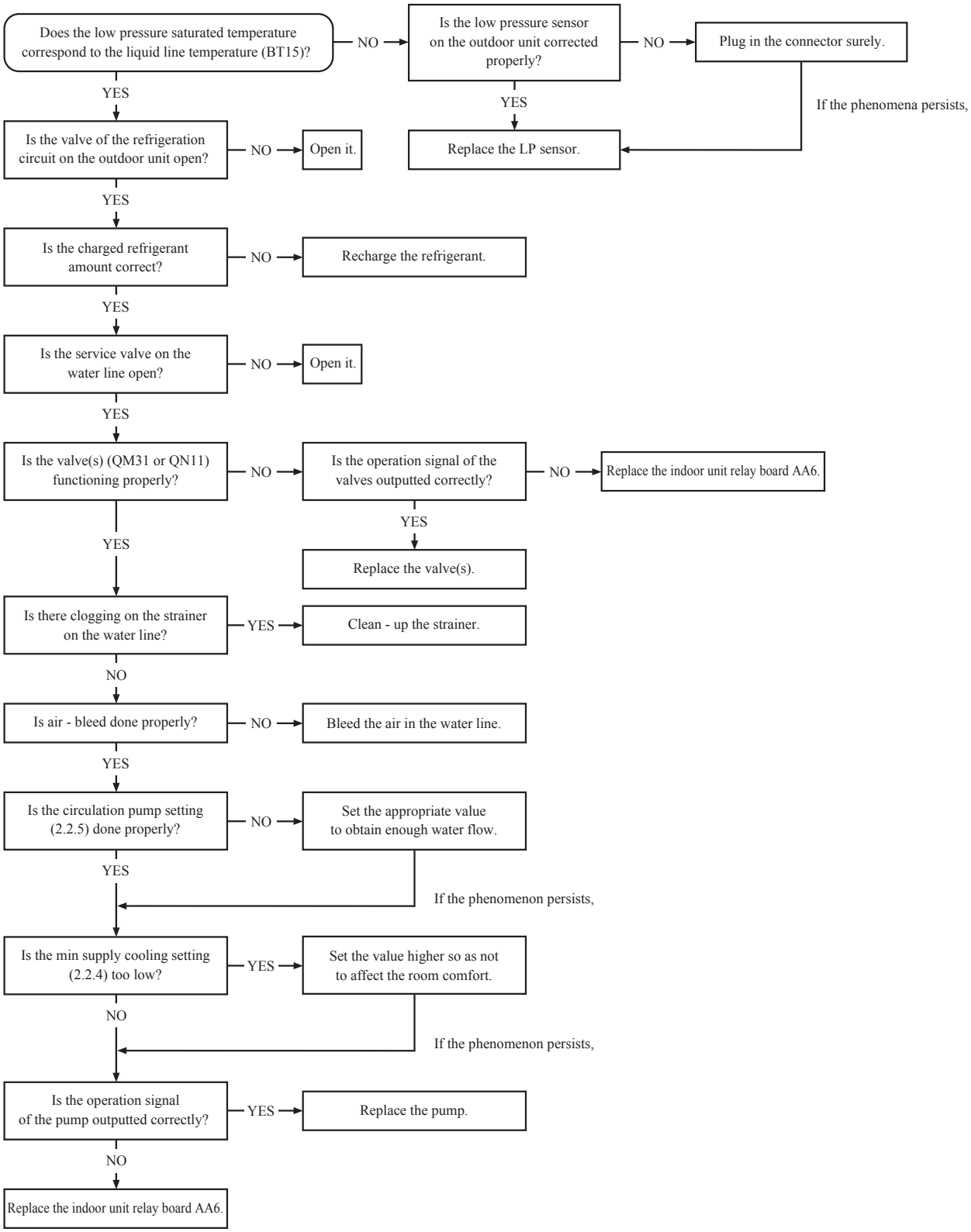

8 - High HW temp. 9 High AH temp.

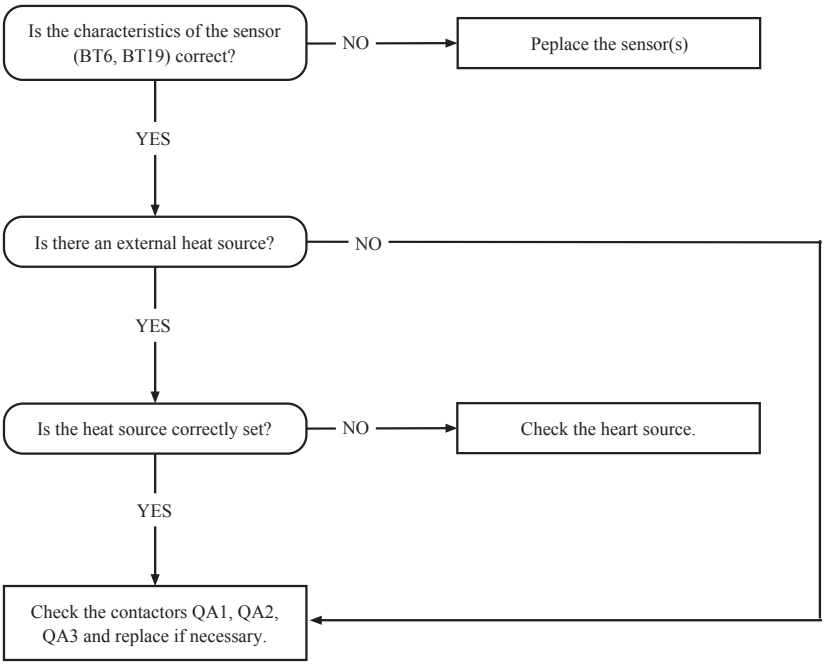

10 - High Supply temp. 1, 11 High Supply temp. 2

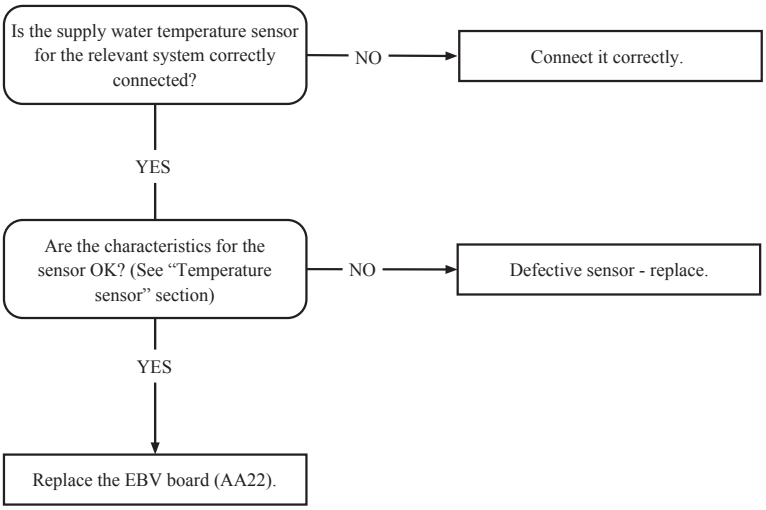

14, 16 - Aborted defrost

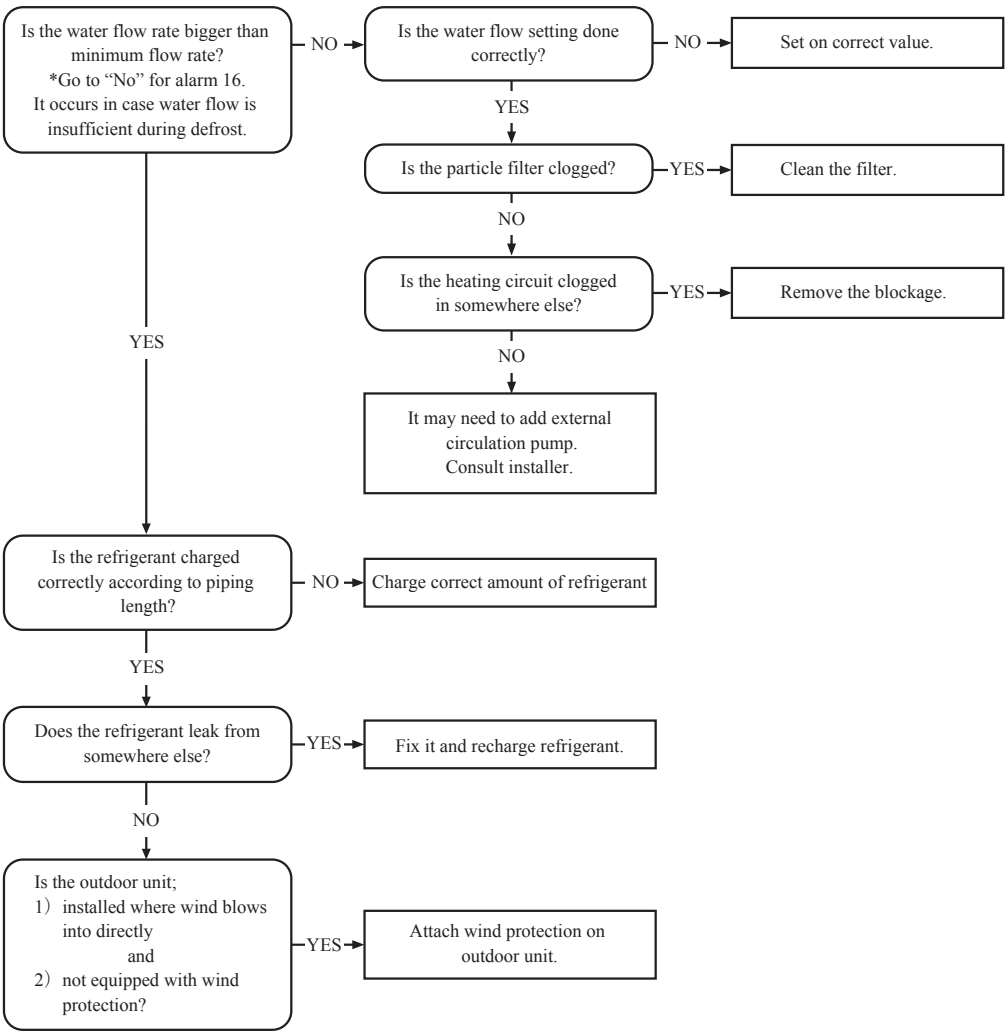

31 - S. fault HP

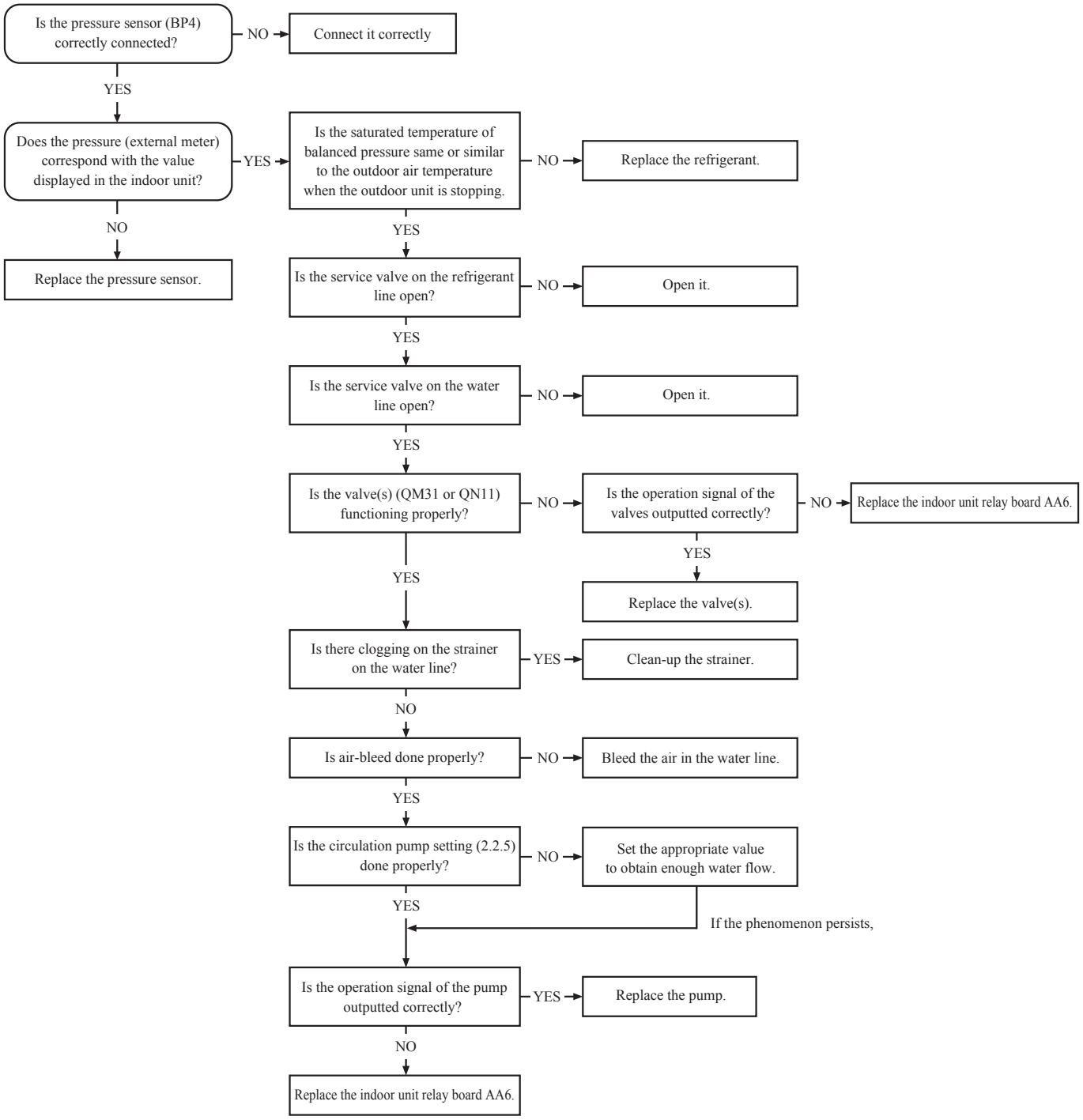
Is the pressure sensor (BP4) correctly connected?
NO
Connect it correctly
YES
Does the pressure (external meter) correspond with the value displayed in the indoor unit?
YES
Is the saturated temperature of balanced pressure same or similar to the outdoor air temperature when the outdoor unit is stopping.
NO
Replace the refrigerant.
NO
Replace the pressure sensor.
YES
Is the service valve on the refrigerant line open?
NO
Open it.
YES
Is the service valve on the water line open?
NO
Open it.
YES
Is the valve(s) (QM31 or QN11) functioning properly?
NO
Is the operation signal of the valves outputted correctly?
NO
Replace the indoor unit relay board AA6.
YES
Replace the valve(s).
YES
Is there clogging on the strainer on the water line?
YES
Clean-up the strainer.
NO
Is air-bleed done properly?
NO
Bleed the air in the water line.
YES
Is the circulation pump setting (2.2.5) done properly?
NO
Set the appropriate value to obtain enough water flow.
YES
If the phenomenon persists,
Is the operation signal of the pump outputted correctly?
YES
Replace the pump.
NO
Replace the indoor unit relay board AA6.

30 - S. fault Outdoor, 32 - S. fault Cond out, 33 - S. fault Liquid line, 34 - S. fault HW, 35 - S. fault AH,
36 - S. fault supply 1, 37 - S. fault supply 2

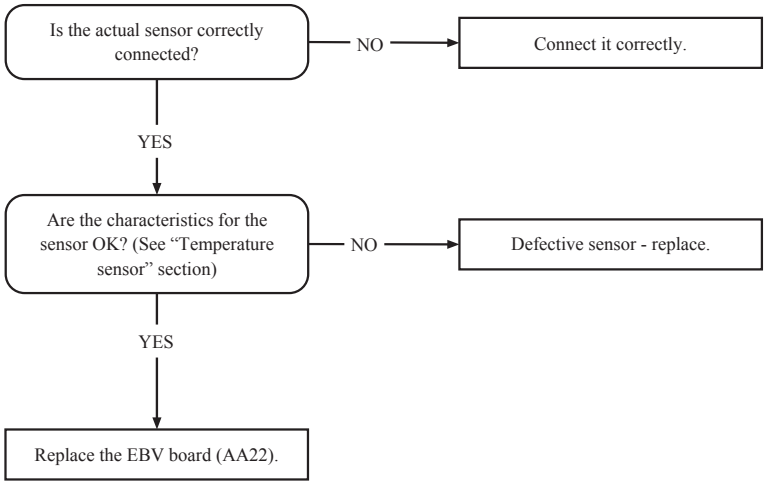

E35 - High HX temp

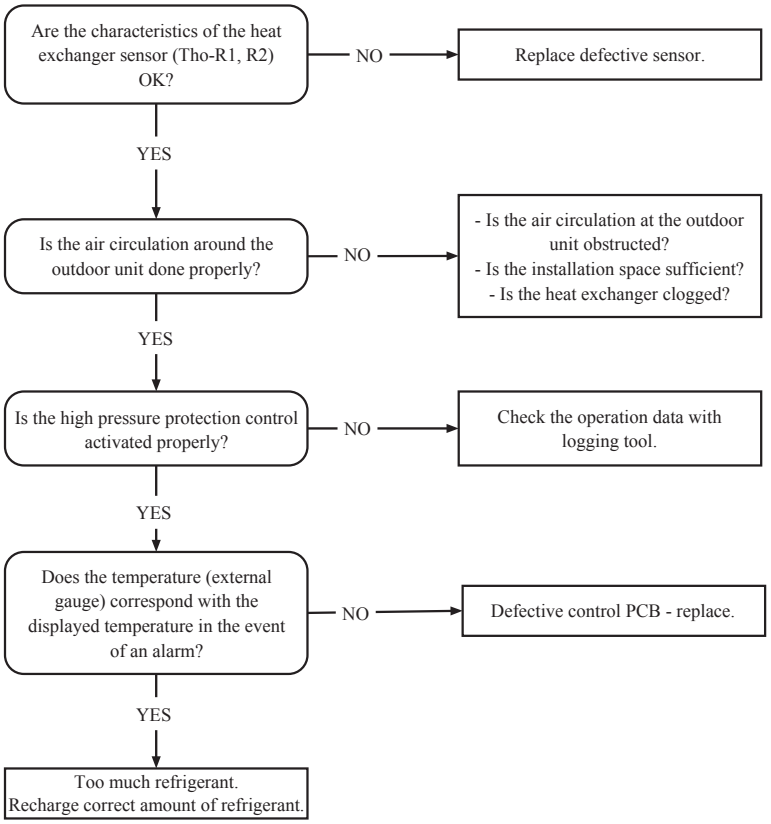

E36 - Permanent Hotgas

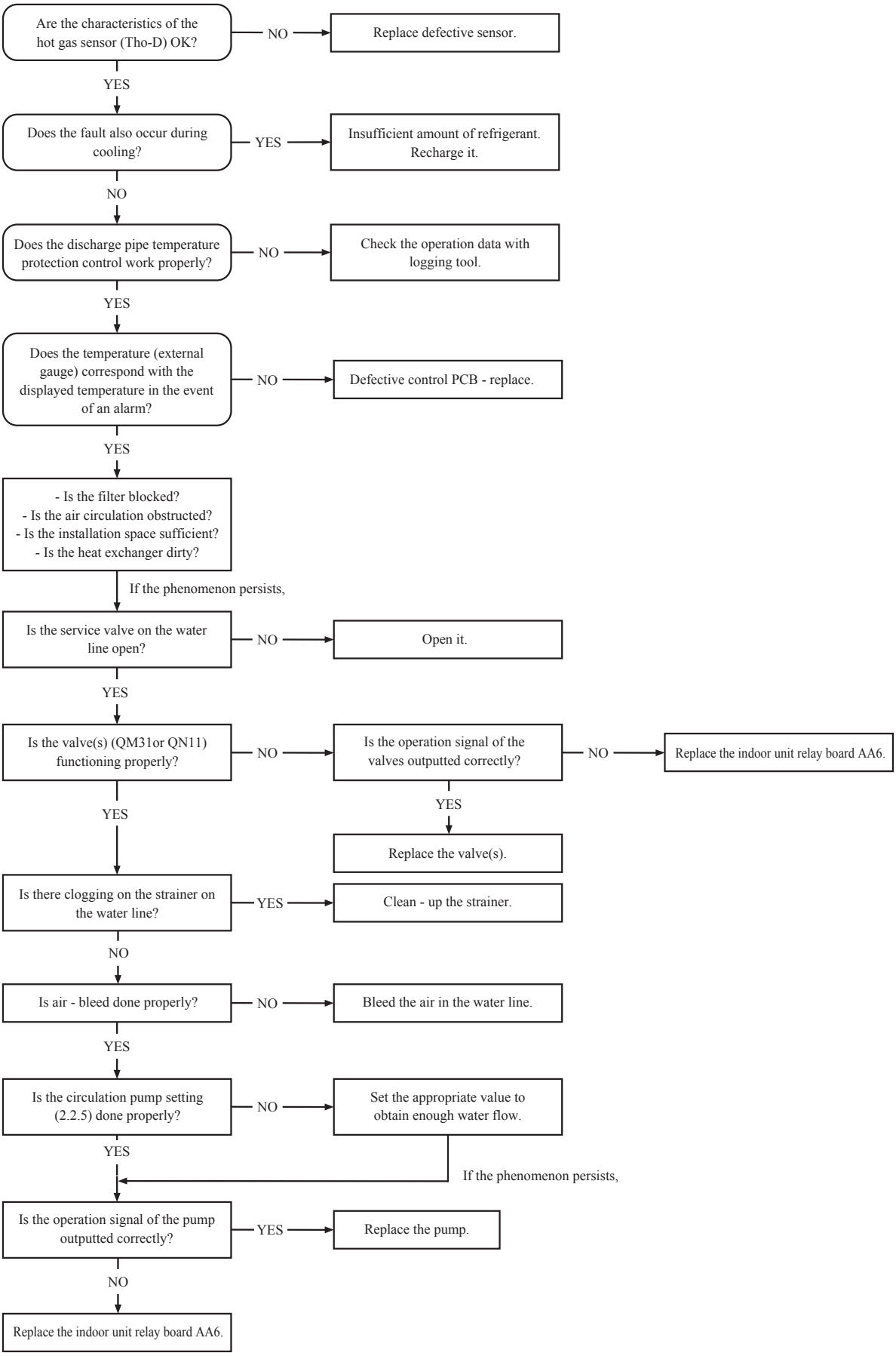

E37 - S. fault Tho-R

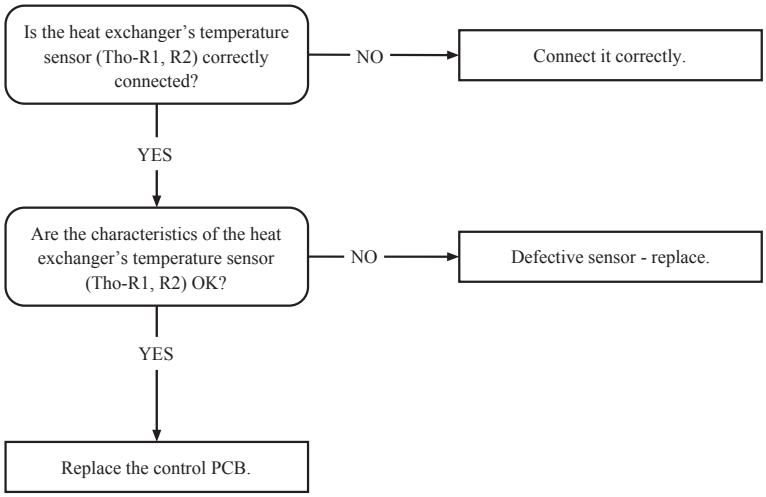

E38 - S. fault Tho-A

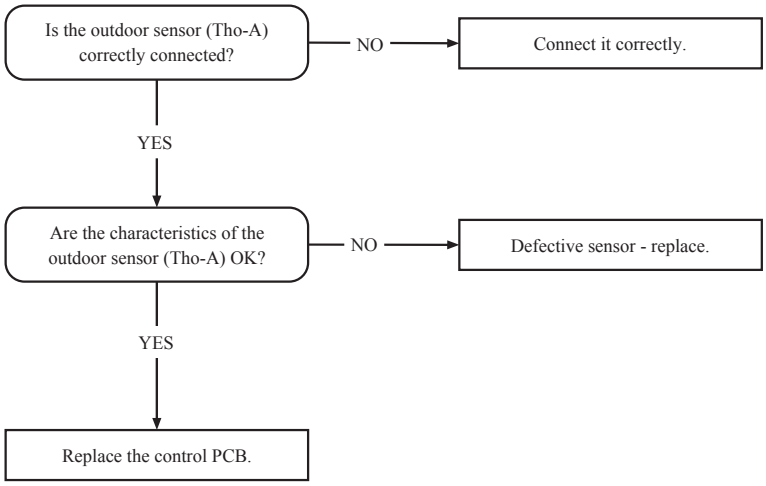

E39 - S. fault Tho-D

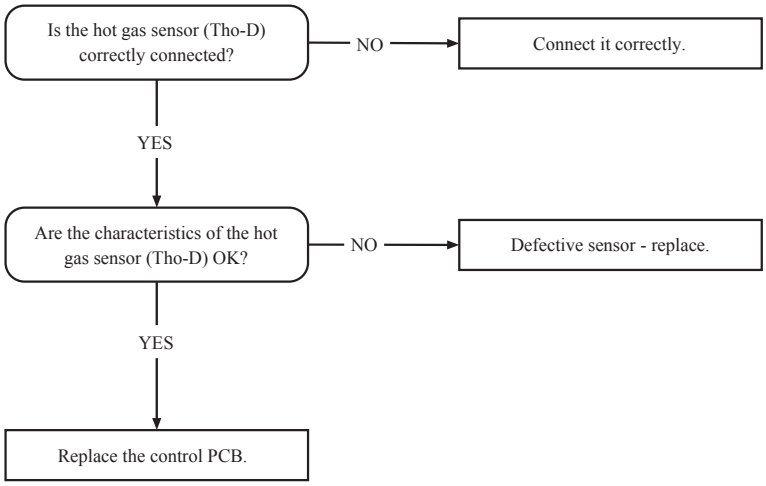

E40 - HP alarm

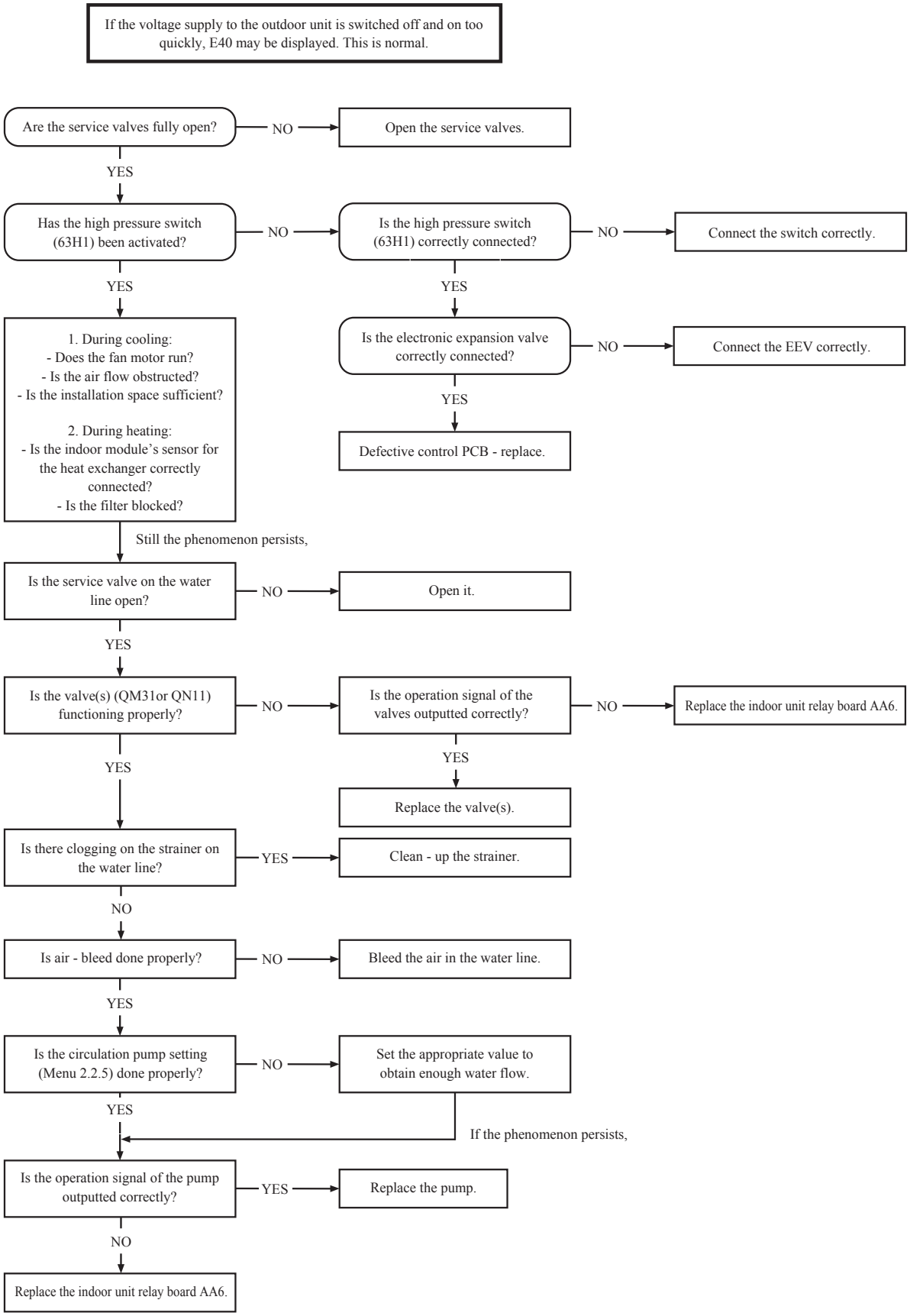
If the voltage supply to the outdoor unit is switched off and on too quickly, E40 may be displayed. This is normal.
Are the service valves fully open?
NO
Open the service valves.
YES
Has the high pressure switch (63H1) been activated?
NO
Is the high pressure switch (63H1) correctly connected?
NO
Connect the switch correctly.
YES
YES
1. During cooling:
- Does the fan motor run?
- Is the air flow obstructed?
- Is the installation space sufficient?
2. During heating:
- Is the indoor module's sensor for the heat exchanger correctly connected?
- Is the filter blocked?
Is the electronic expansion valve correctly connected?
NO
Connect the EEV correctly.
YES
Defective control PCB - replace.
Still the phenomenon persists,
Is the service valve on the water line open?
NO
Open it.
YES
Is the valve(s) (QM31or QN11) functioning properly?
NO
Is the operation signal of the valves outputted correctly?
NO
Replace the indoor unit relay board AA6.
YES
YES
Replace the valve(s).
Is there clogging on the strainer on the water line?
YES
Clean - up the strainer.
NO
Is air - bleed done properly?
NO
Bleed the air in the water line.
YES
Is the circulation pump setting (Menu 2.2.5) done properly?
NO
Set the appropriate value to obtain enough water flow.
YES
If the phenomenon persists,
Is the operation signal of the pump outputted correctly?
YES
Replace the pump.
NO
Replace the indoor unit relay board AA6.

E42 - Current cut

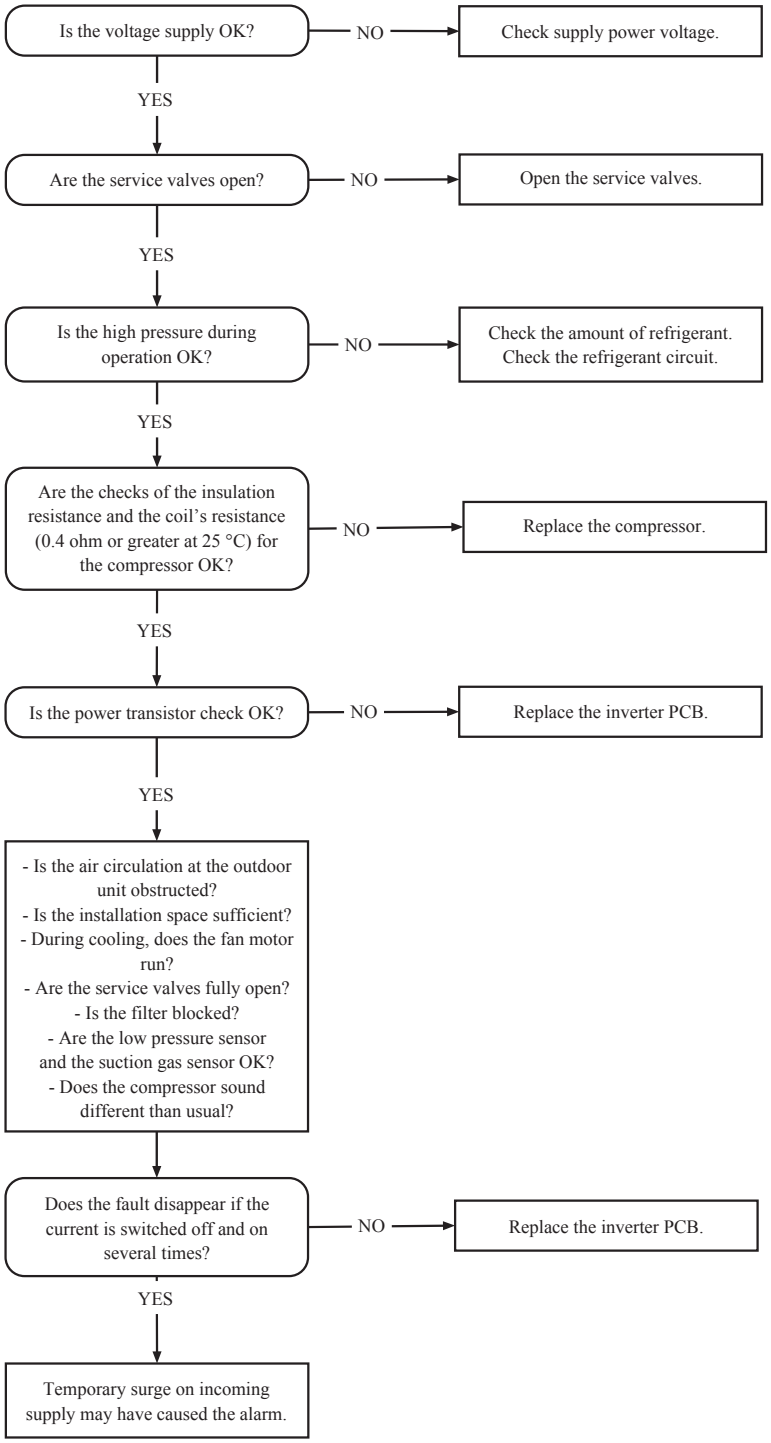

E45 - Inverter communication error

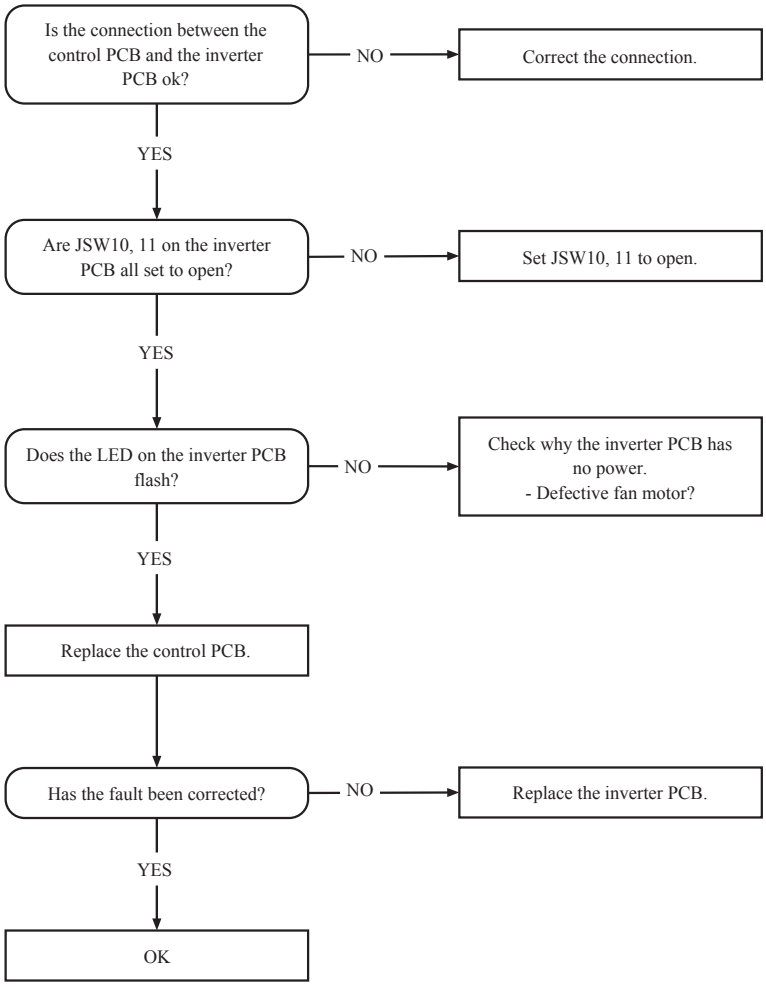

E47 - Inverter A/F module over current

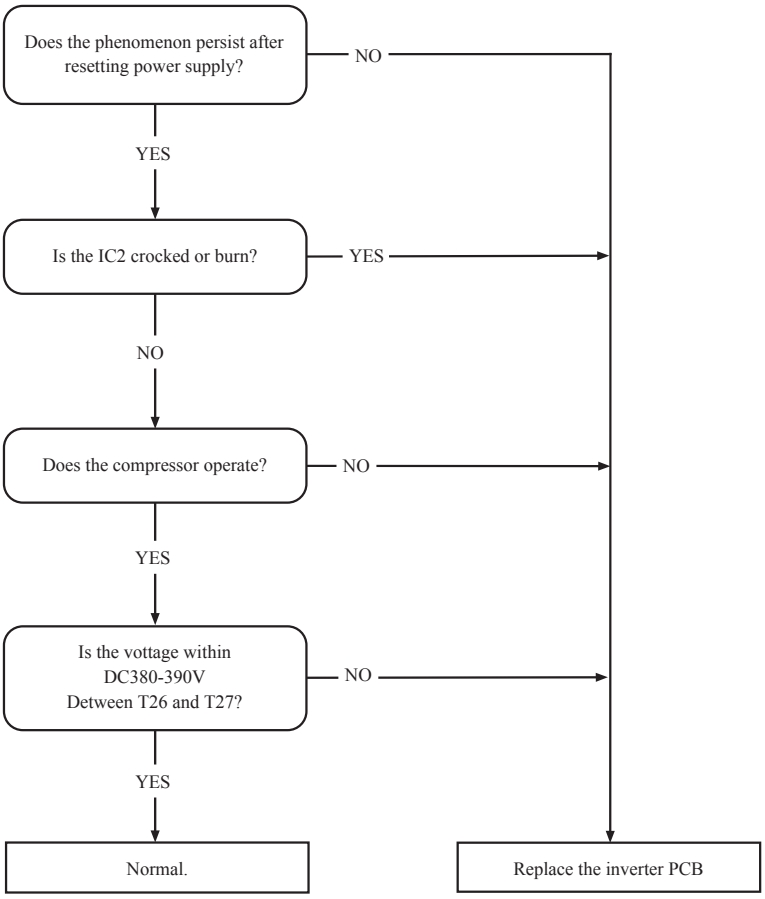

E48 - Fan alarm

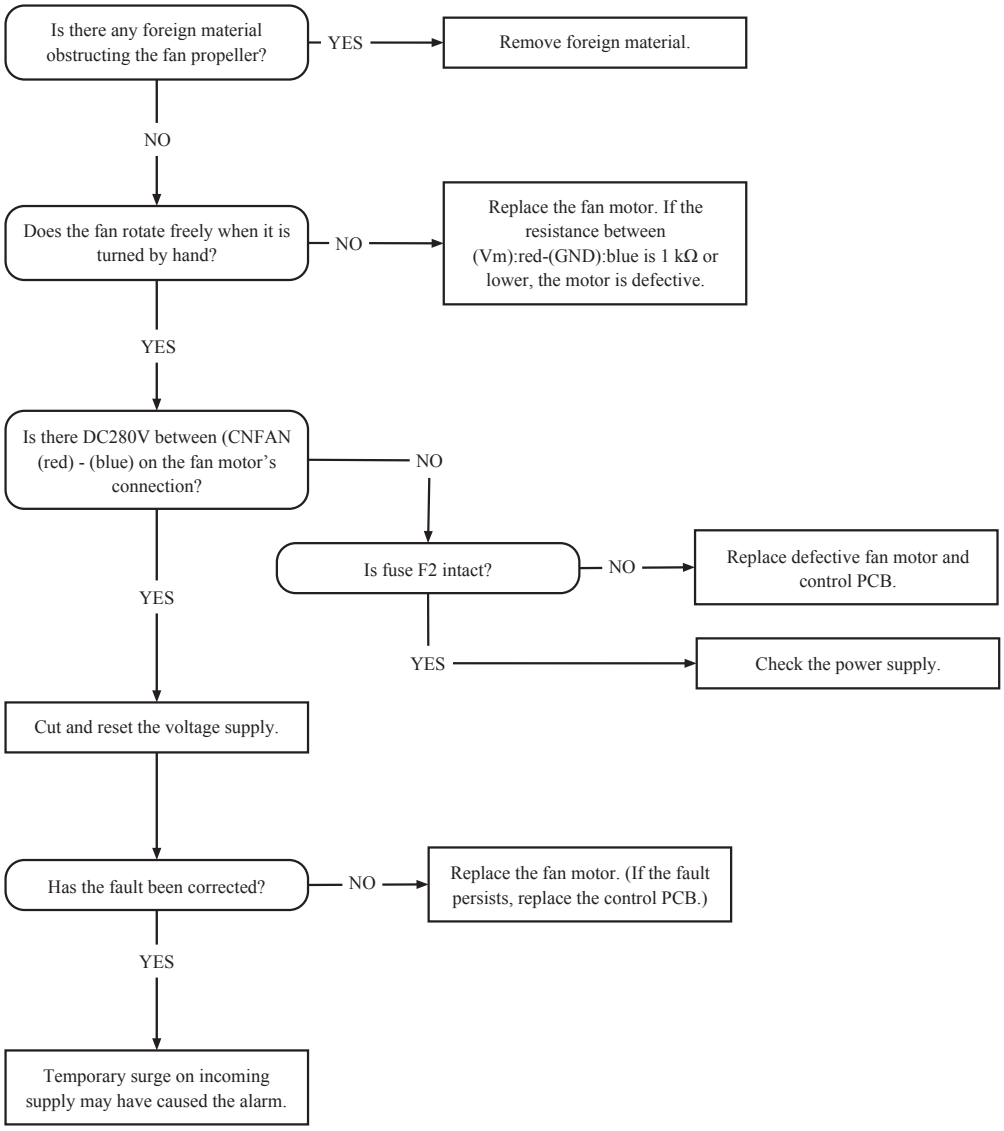

E49 - LP alarm

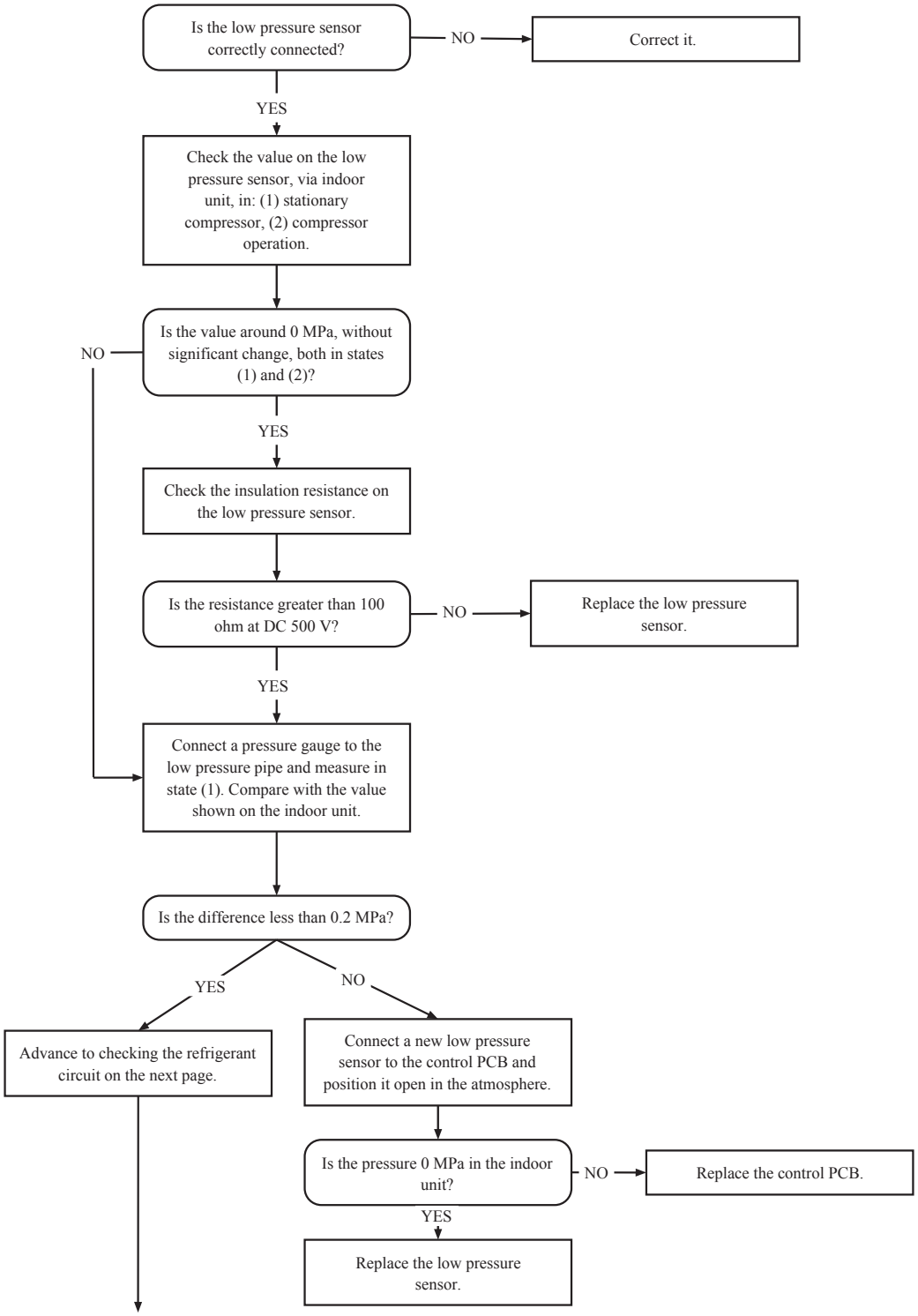
Is the low pressure sensor correctly connected?
NO
Correct it.
YES
Check the value on the low pressure sensor, via indoor unit, in: (1) stationary compressor, (2) compressor operation.
Is the value around 0 MPa, without significant change, both in states (1) and (2)?
NO
YES
Check the insulation resistance on the low pressure sensor.
Is the resistance greater than 100 ohm at DC 500 V?
NO
Replace the low pressure sensor.
YES
Connect a pressure gauge to the low pressure pipe and measure in state (1). Compare with the value shown on the indoor unit.
Is the difference less than 0.2 MPa?
YES
NO
Advance to checking the refrigerant circuit on the next page.
Connect a new low pressure sensor to the control PCB and position it open in the atmosphere.
Is the pressure 0 MPa in the indoor unit?
NO
Replace the control PCB.
YES
Replace the low pressure sensor.

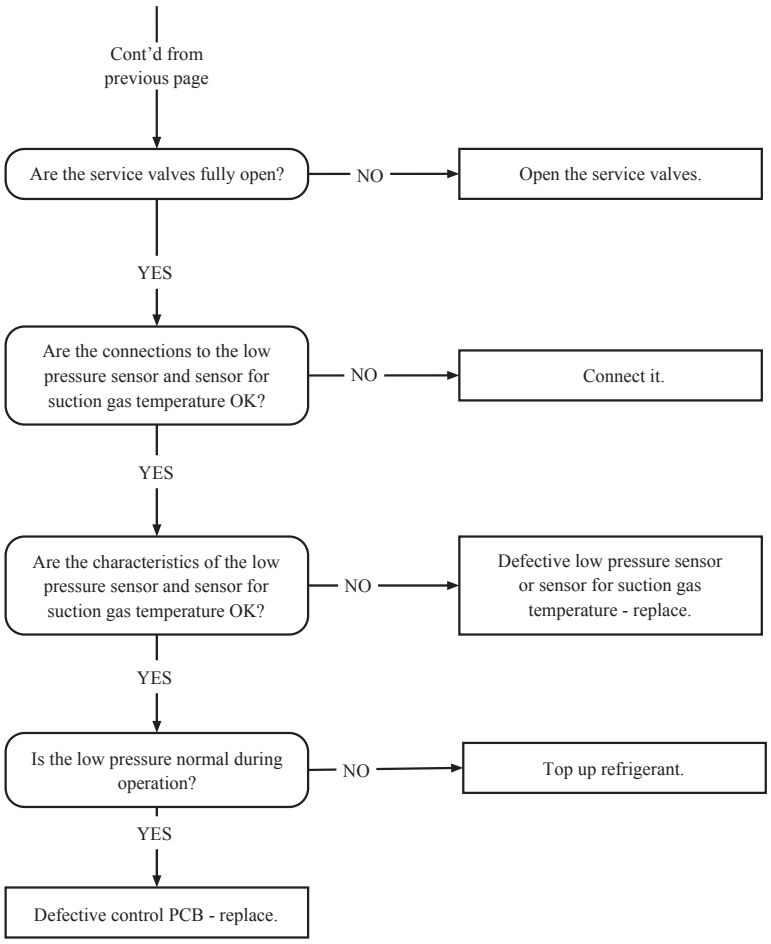
Cont'd from previous page
Are the service valves fully open?
NO
Open the service valves.
YES
Are the connections to the low pressure sensor and sensor for suction gas temperature OK?
NO
Connect it.
YES
Are the characteristics of the low pressure sensor and sensor for suction gas temperature OK?
NO
Defective low pressure sensor or sensor for suction gas temperature - replace.
YES
Is the low pressure normal during operation?
NO
Top up refrigerant.
YES
Defective control PCB - replace.

E51 - Inverter and fan motor error

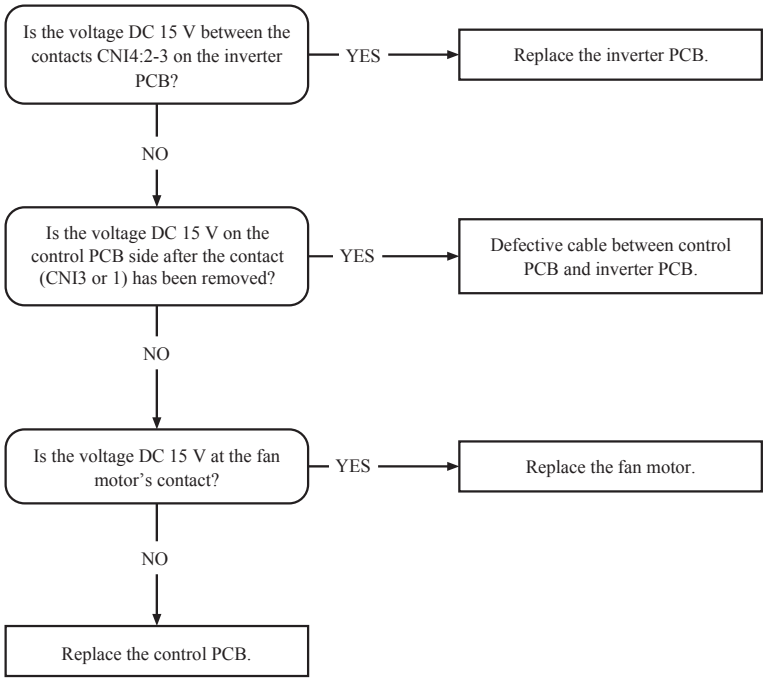

E53 - S. fault Tho-S

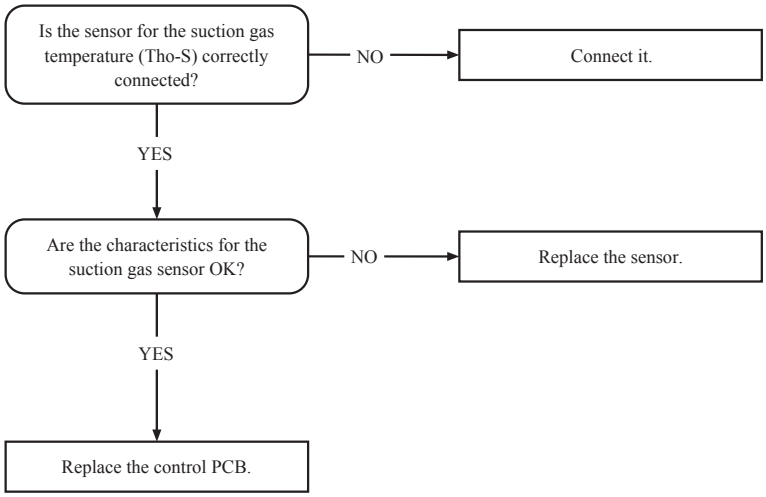

E54 - S. fault LPT

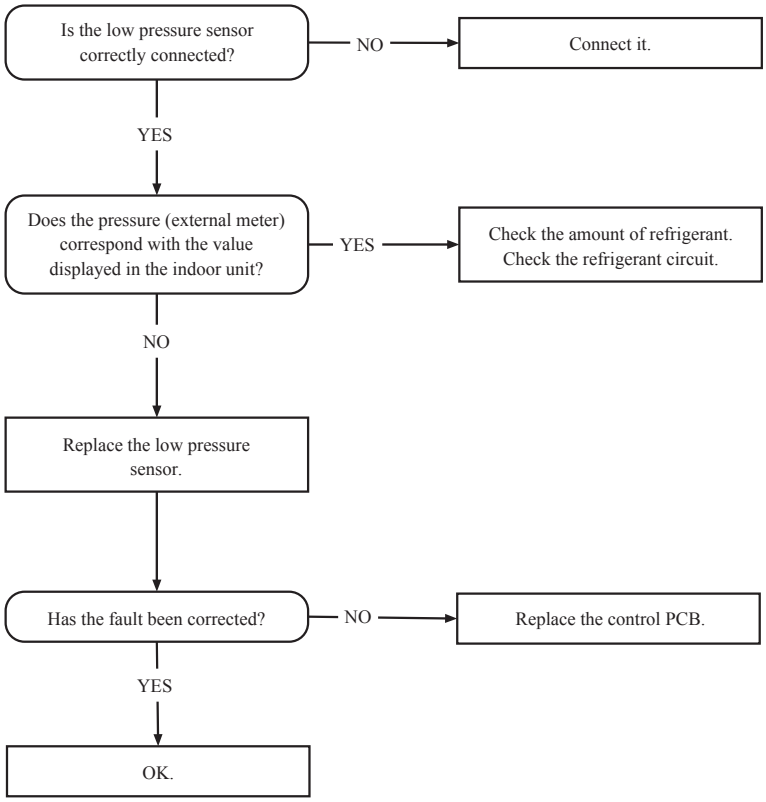

E57 - Low refrigerant

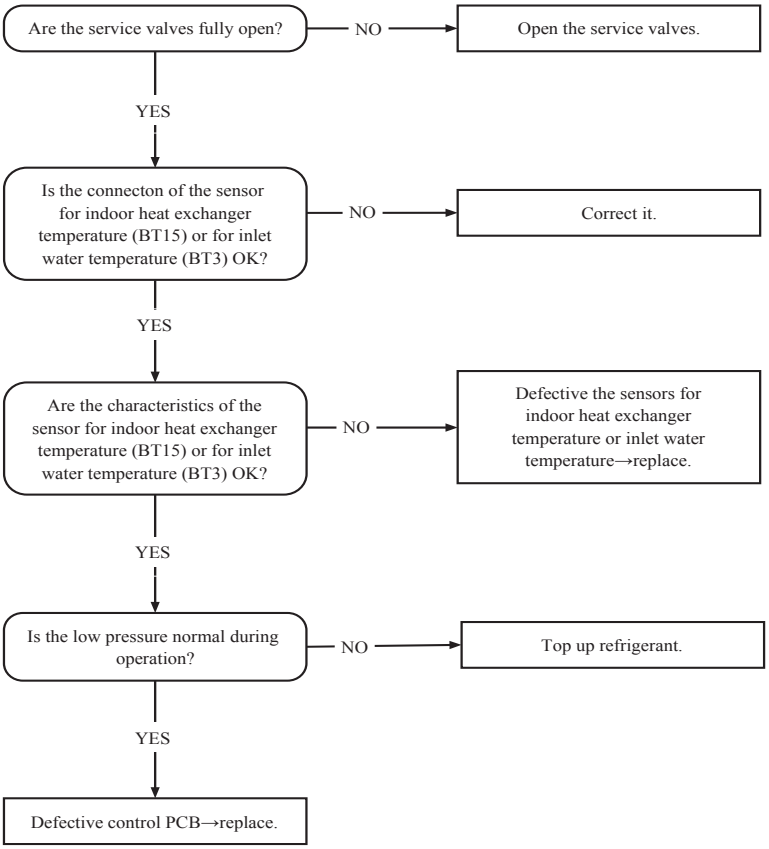

E59 - Inverter error

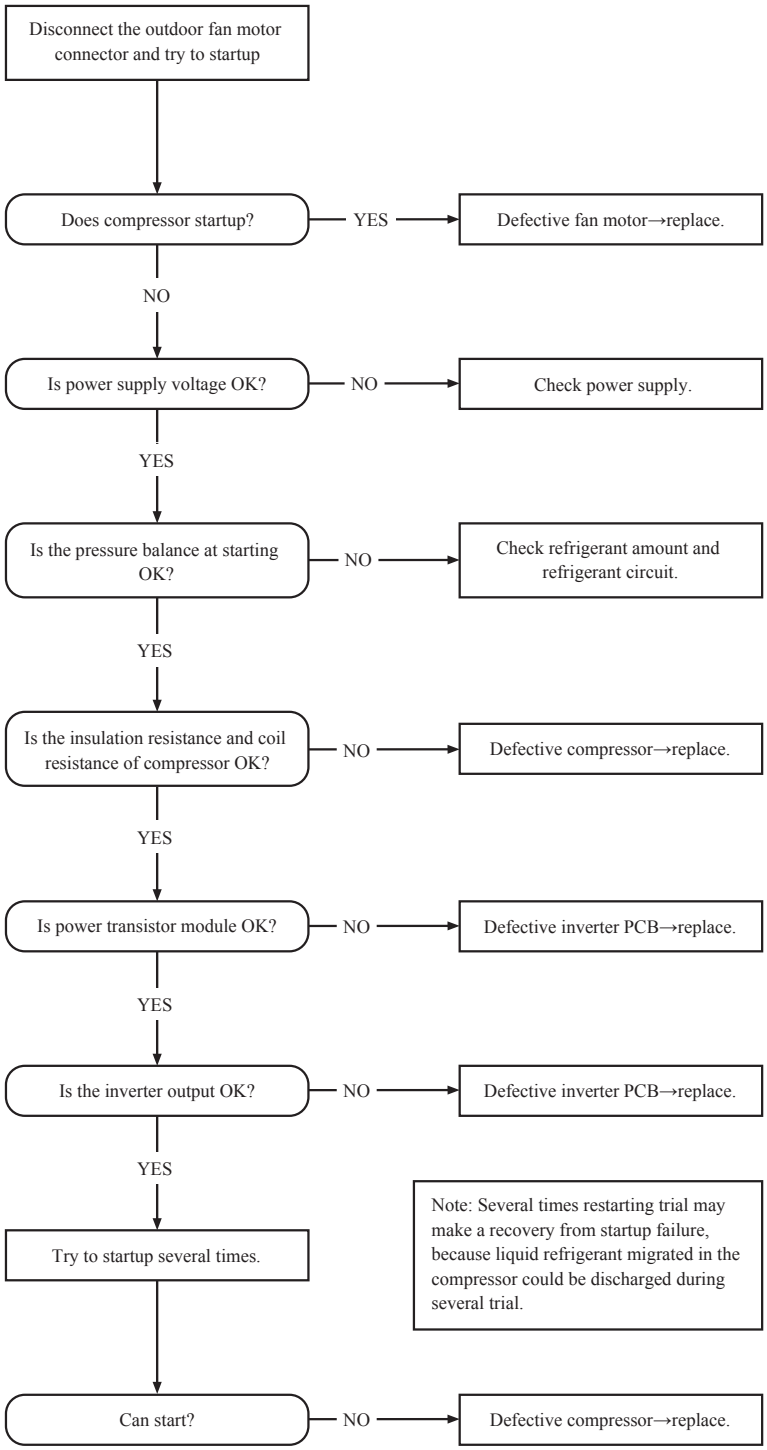

Function check, components

Indoor unit Relay test - forced control

Control conditions

Forced control of the relays can be carried out in Menu 9.3.7.0. Menu 9.3.7.1 must be selected to “On” in order for the function to be activated. Respective relay controlled by selecting 0, 1 or dash (-) for each relay in Menu 9.3.7.2 to 9.3.7.15.

0 is not powered -inactive, **1** is voltage out -active, and (-) means “Auto”, i.e. the control system selects whether the output is active or inactive.

⚠WARNING!

Forced control must only be used by users familiar with the system. When forced control is activated, the alarm functions are disabled.

Testing shunts

Relay 2 and 3 are connected in series and used to control Three-way valve Cooling/heating.

Relays K4 and K5 are used to open and close mixing valve QN11. Therefore, relays K4 and K5 must not be set to mode 1 at the same time.

To open the mixing valve, select relay K4 to position 1 and relay K5 to position 0.

To close the mixing valve, select relay K5 to position 1 and relay K4 to position 0.

The mixing valve is locked when K4 and K5 are in position 0.

Relays K13 and K14 are used to open and close mixing valve 2. Therefore, relays K13 and K14 must not be set to mode 1 at the same time.

To open the mixing valve, select relay K13 to position 1 and relay K14 to position 0.

To close the mixing valve, select relay K14 to position 1 and relay K13 to position 0.

The mixing valve is locked when K13 and K14 are in position 0.

Relay functions

Relay	Component	Name	Status	Function	Connection
K1	Circulation pump, climate system	-GP1	0	Off	
			1	On	X1:2
K2, K3	Shuttle valve for Cooling/heating	-QN12	K2-0, K3-0	Off	
			K2-0, K3-1	On	X1:4
K4	Mixing valve	-QN11	1	Open	X1:13
K5	Mixing valve	-QN11	1	Close	X1:14
K6	Reversing valve, climate system	-QM31	0	Closed	
			1	Open	X1:20
K7	Reversing valve, hot water	-QM30	0	Closed	
			1	Open	X1:23
K8	Contactor electrical step 2	-QA2	0	Off	
			1	On	X1:26
K9	Contactor electrical step 1	-QA1	0	Off	
			1	On	X1:27
K10	Contactor electrical step 3	-QA3	0	Off	
			1	On	X1:28
K11	Operating contactor Outdoor unit	-QA10	0	Off	
			1	On	X1:30
K12	Circulation pump	-GP10	0	Off	
			1	On	X1:38
K13	Mixing Valve, system 2	EP21-QN11	1	Open	X1:40
K14	Mixing Valve, system 2	EP21-QN11	1	Close	X1:42
Alarm relay 1	High priority alarm relay	-AA22-K1	0	inactive	-AA22 X2:1-2
			1	active	-AA22 X2:1-3
Alarm relay 2	Low priority alarm relay	-AA22-K2	0	inactive	-AA22 X3:1-2
			1	active	-AA22 X3:1-3

Tips

- Always close forced control in Menu 9.3.7.1 after using it.

Dip switch setting

FDCW71VNX

(1) Control PCB

Switches	Factory setting	Remarks
SW3-1*	OFF	* See below table
SW3-2*	OFF	* See below table
SW3-3	OFF	Keep OFF
SW3-4	ON	Keep ON
SW4-1	ON	Keep ON
SW4-2	ON	Keep ON
SW4-3	OFF	Keep OFF
SW4-4	OFF	Keep OFF
SW5-1	OFF	Keep OFF
SW5-2	OFF	Keep OFF
SW5-3	OFF	Keep OFF
SW5-4	OFF	Keep OFF
SW7-1	OFF	Keep OFF
SW7-2	OFF	Keep OFF
SW7-3	OFF	Keep OFF
SW8-1	OFF	Keep OFF
SW8-2	OFF	Keep OFF
SW8-3	OFF	Keep OFF
SW9	OFF	Tactile switch

Control PCB

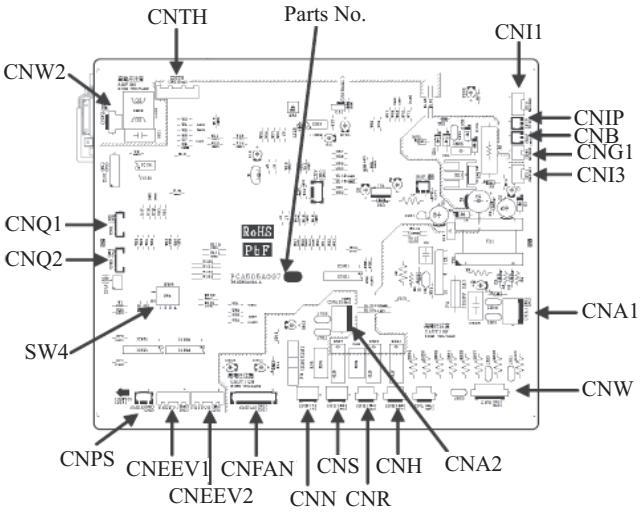

Note: Meaning of marking on the DIP switch

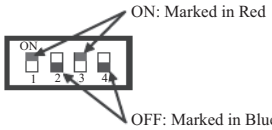

When replacing PCB, set up the DIP switch according to the previous setting with the meaning of marking in mind or with reference to this factory setting list.

* Function of DIP switch

Switch	Function	Setting	
		OFF	ON
SW3-1	Defrost setting	Normal	Cold region
SW3-2	Snow protection control	Normal	Snow protection

Note: DIP switch SW3 is located as shown in the photo.

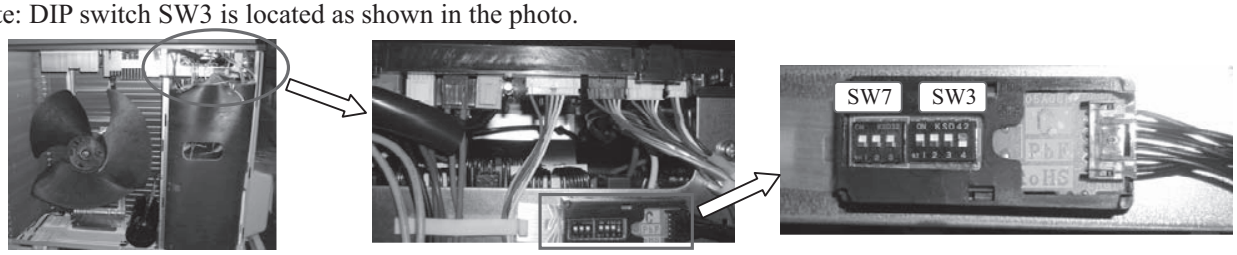

(1) Inverter PCB

Switches	Factory setting	Remarks
JSW10-1	OFF	Keep OFF
JSW10-2	OFF	Keep OFF
JSW10-3	OFF	Keep OFF
JSW10-4	OFF	Keep OFF
JSW11-1	ON	Keep ON
JSW11-2	ON	Keep ON
JSW11-3	ON	Keep ON
JSW11-4	ON	Keep ON

Inverter PCB

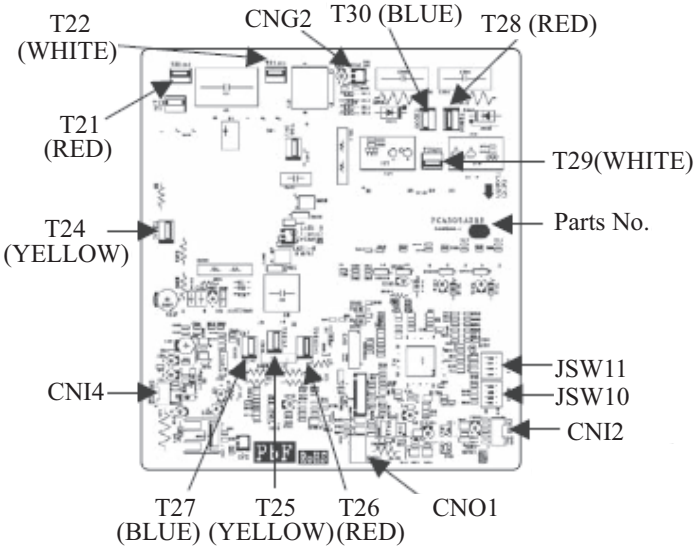

FDCW100VNX, 140VNX

(1) Control PCB

Switches	Factory setting		Remarks
	100VNX	140VNX	
JSW1-1	OFF	OFF	Keep as factory setting
JSW1-2	OFF	ON	Keep as factory setting
JSW1-3	OFF	OFF	Keep as factory setting
JSW1-4	OFF	OFF	Keep as factory setting
SW4-1	ON	ON	Keep as factory setting
SW4-2	ON	ON	Keep as factory setting
SW4-3	OFF		Keep OFF
SW4-4	ON		Keep ON
SW3-1*	OFF		Keep OFF
SW3-2*	OFF		Keep OFF
SW3-3	OFF		Keep OFF
SW3-4	OFF		Keep OFF
SW5-1	OFF		Keep OFF
SW5-2	ON		Keep OFF
SW5-3	OFF		Keep OFF
SW5-4	OFF		Keep OFF
J5**	With/ON		Keep With/ON
J6**	With/ON		Keep With/ON
J7**	With/ON		Keep With/ON
SW1	OFF		Tactile switch
SW2-1	ON		Keep ON
SW2-2	ON		Keep ON
SW2-3	ON		Keep ON

* Function of DIP switch

Switch	Function	Setting	
		OFF	ON
SW3-1	Defrost setting	Normal	Cold region
SW3-2	Snow protection control	Normal	Snow protection

** Control PCB on the unit: Jumper,
Control PCB of the spare part: Dip switch

Control PCB

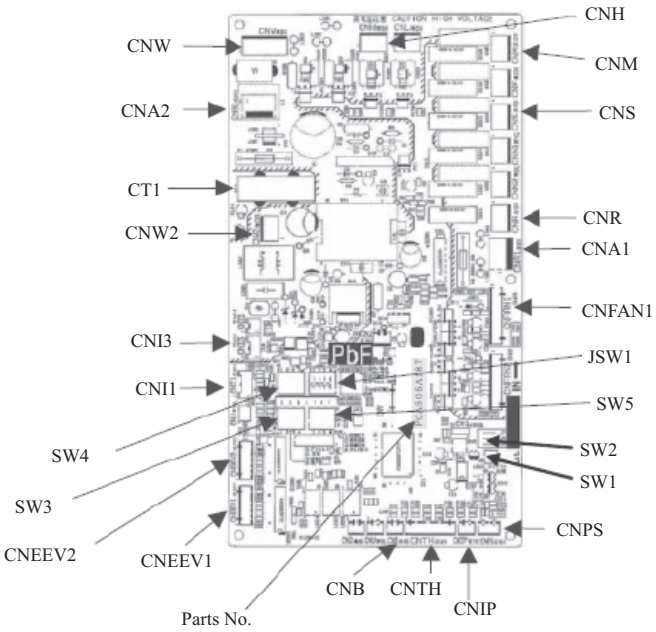

Note: Meaning of marking on the DIP switch

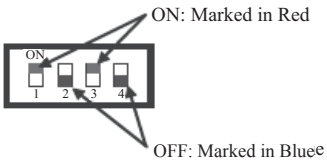

When replacing PCB, set up the DIP switch according to the previous setting with the meaning of marking in mind or with reference to this factory setting list.

(2) Inverter PCB

Switches	Factory setting		Remarks
	100VNX	140VNX	
JSW10-1	OFF		Keep OFF
JSW10-2	OFF		Keep OFF
JSW10-3	OFF		Keep OFF
JSW10-4	OFF		Keep OFF
JSW11-1	ON	ON	Keep as factory setting
JSW11-2	OFF	OFF	Keep as factory setting
JSW11-3	OFF	OFF	Keep as factory setting
JSW11-4	ON	ON	Keep as factory setting

Inverter PCB

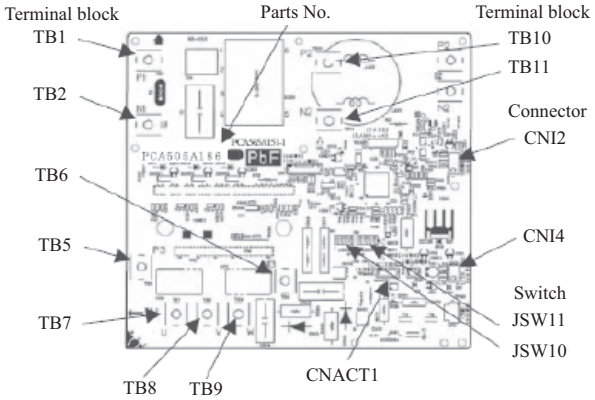

Component replacement

Indoor unit

HMA100V, HMA100VM

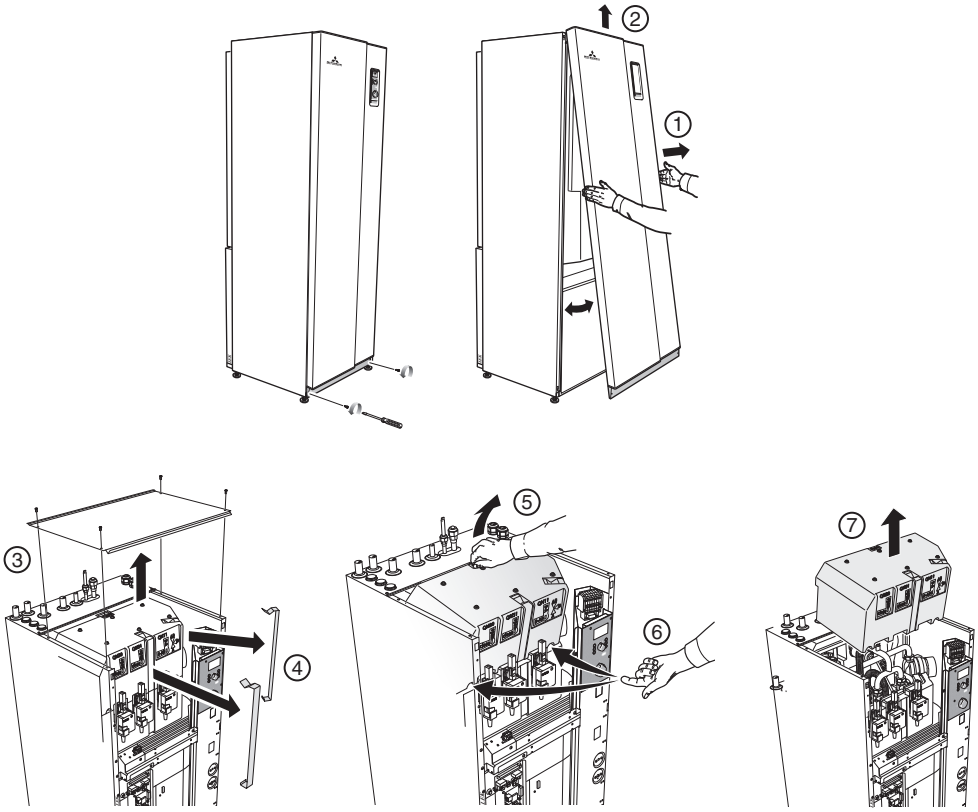

HMS140V

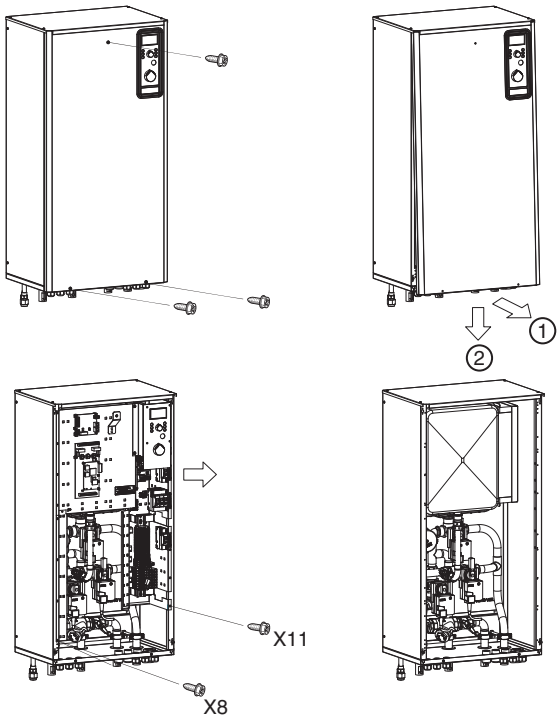

Component replacement

Outdoor unit

FDCW71VNX

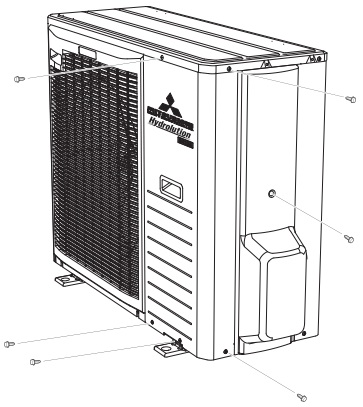

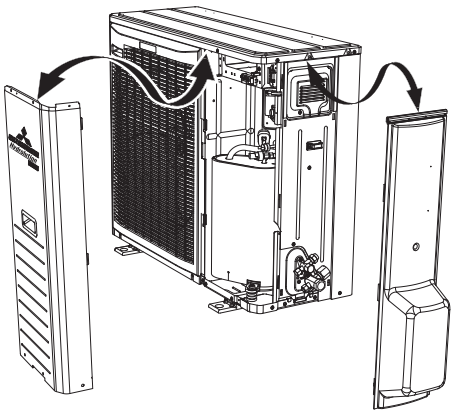

FDCW100VNX

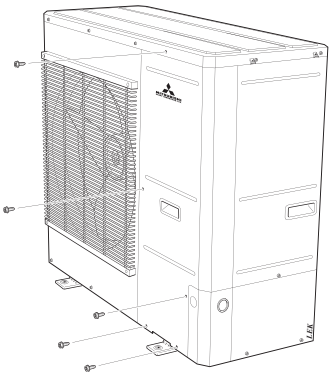

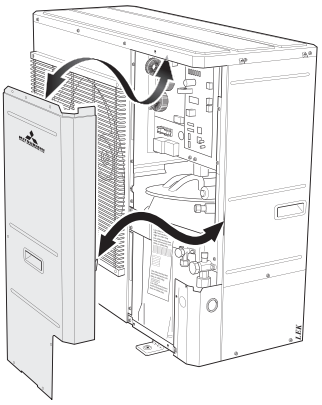

FDCW140VNX

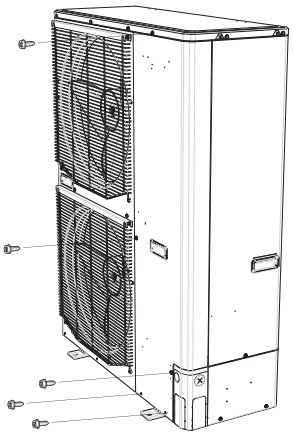

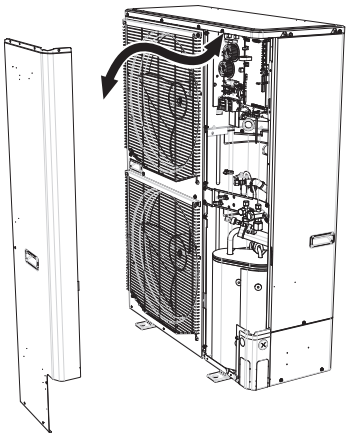

FDCW71VNX

Fan and fan motor (FMo1)	
1. Loosen the screws and remove the top panel and service panel first. **2.** Loosen 5 screws and remove the front panel including fan grille.	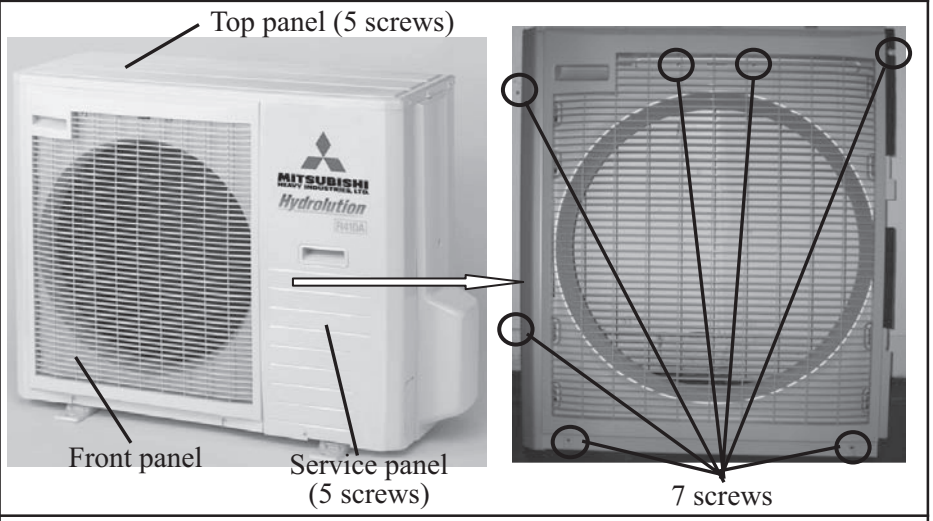
3. Loosen the nut and remove the fan propeller	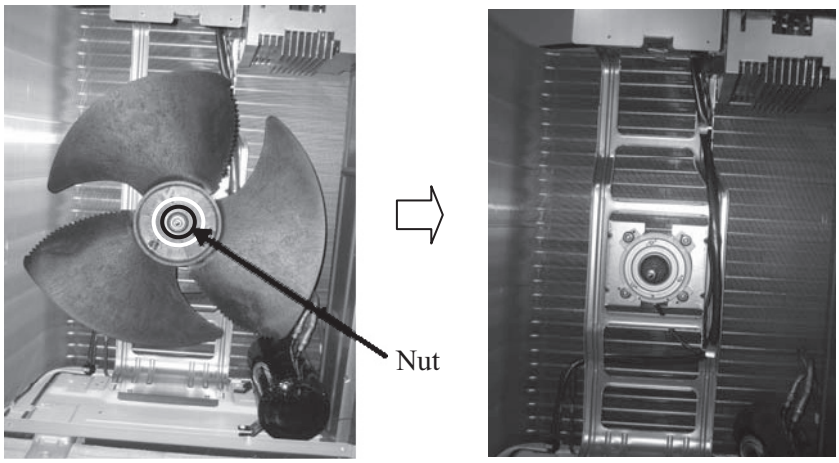
4. Disconnect the connector of CNFAN **5.** Detach the clamp	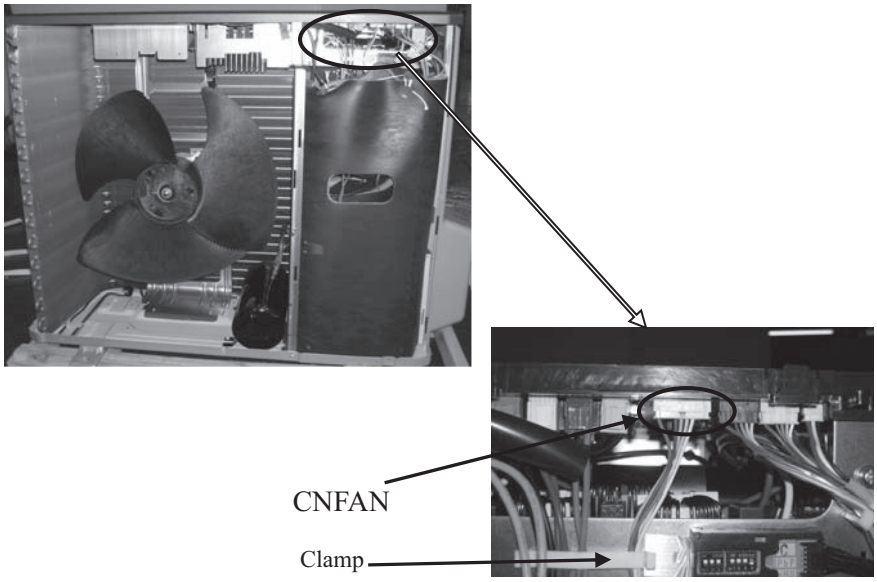

FDCW71VNX

Fan and fan motor (FMo1)

6. Remove tapes and fan cable

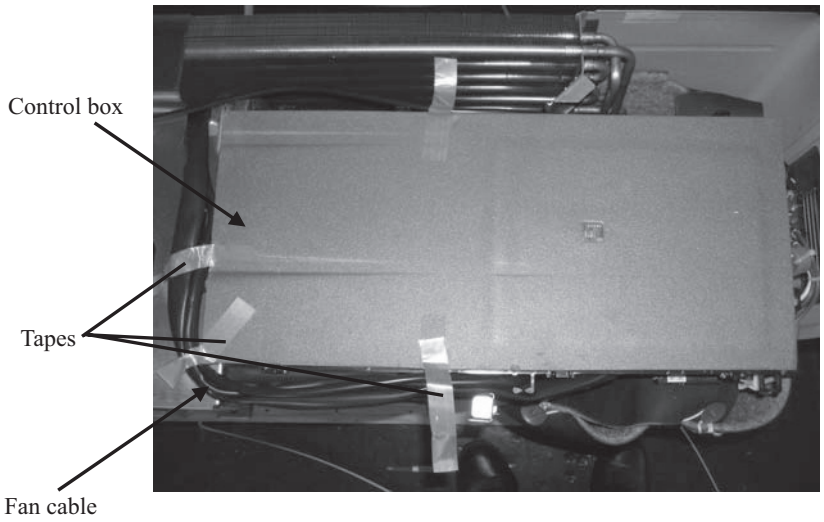

7. Release 2 metal clamps

8. Loosen 4 screws and remove fan motor

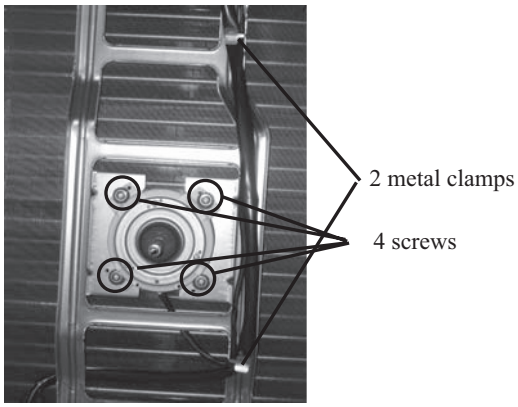

Compressor (CM)

1. Untie the strings and remove the outer insulation

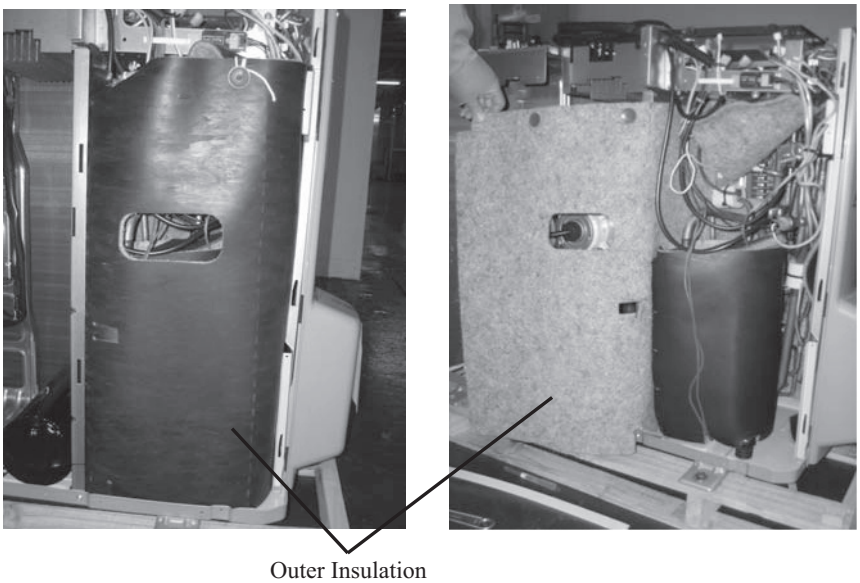

FDCW71VNX

Compressor (CM)	
2. Remove the top and inner insulations. **3** Cut off the strap and pull out the sensor (Tho-D)	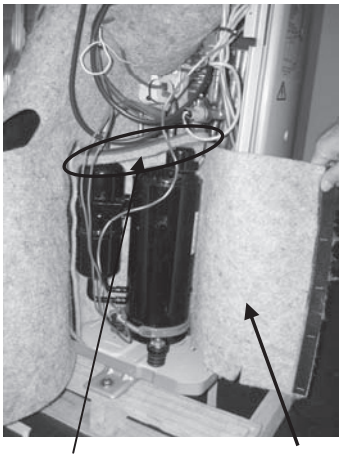 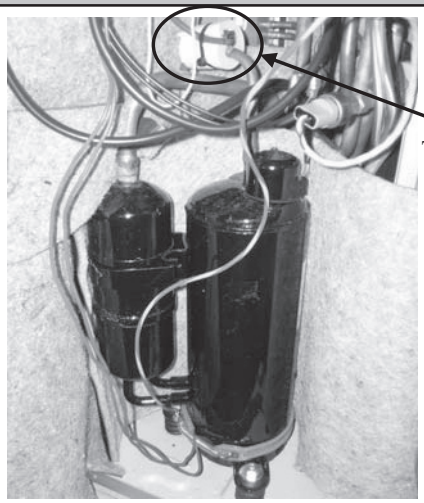
4. Remove the terminal cover **5.** Disconnect the fasten terminal connectors from compressor. U: Red cable V: White cable W: Blue cable	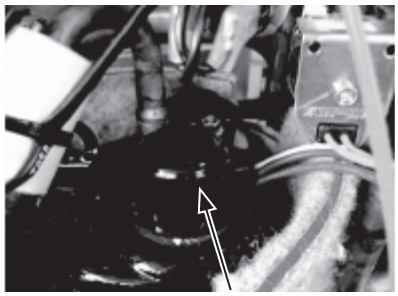 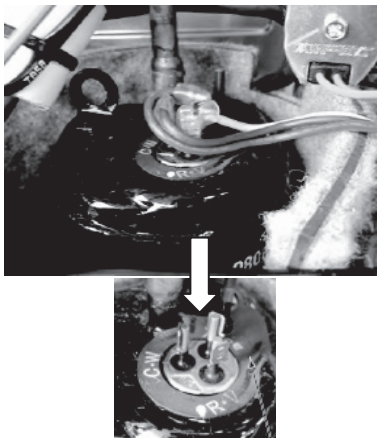
6. Remove the crankcase heater **7.** Unscrew and disconnect the grounding cable **8.** Loosen 3 nuts of compressor fixing bolts	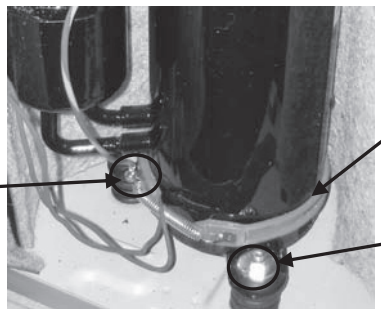
9. Disconnect the pipes for suction and discharge gas **10.** Remove the compressor	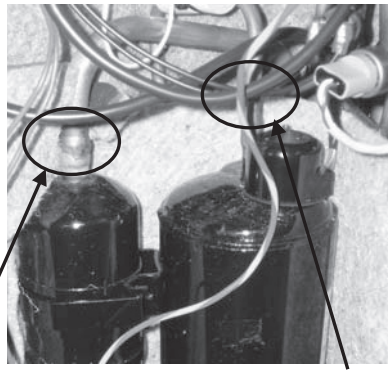

FDCW71VNX

Control PCB (PWB1)

1. Open the top panel

2. Open the control box cover.

Note: Be sure to do this work after elapsing 3 minutes from power OFF.

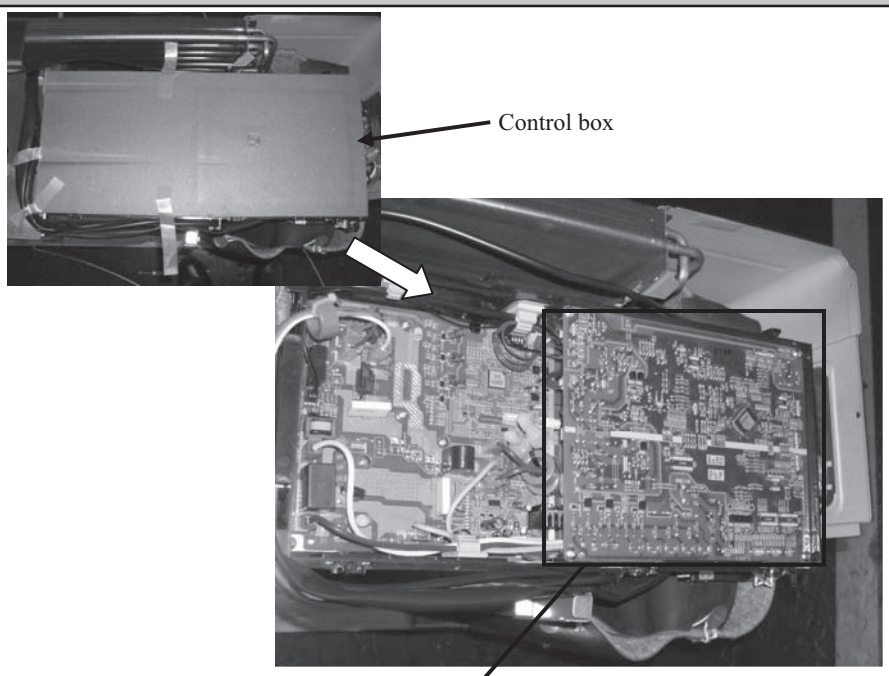

3. Loosen 4 screws

4. Disconnect all connectors and remove the control PCB

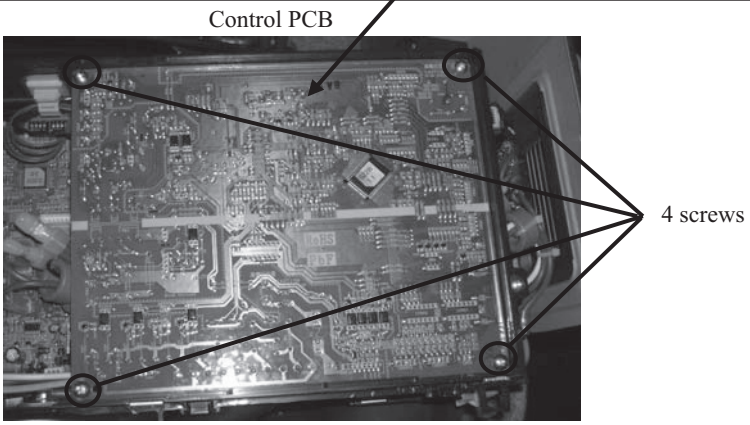

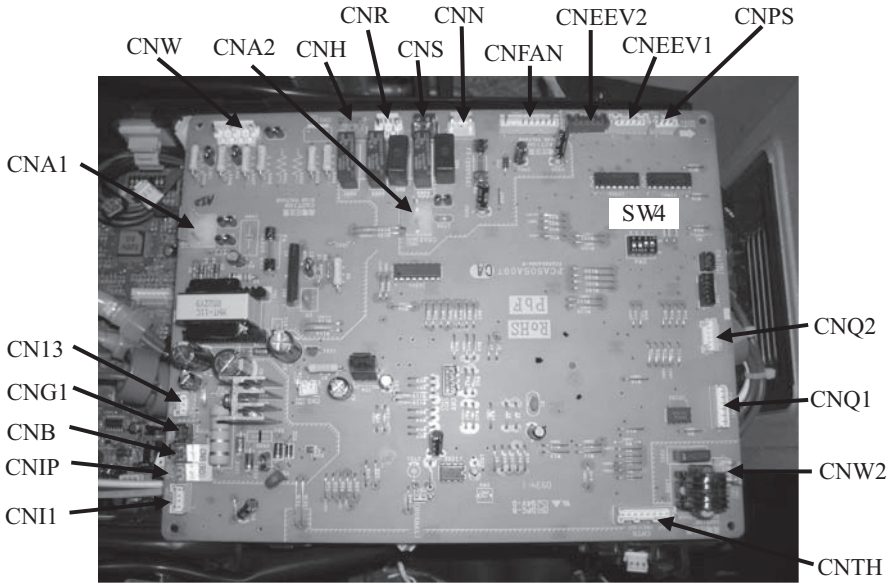

FDCW71VNX

Inverter PCB (PWB2)

1. Remove control PCB first

Note: Be sure to do this work after elapsing 3 minutes from power OFF.

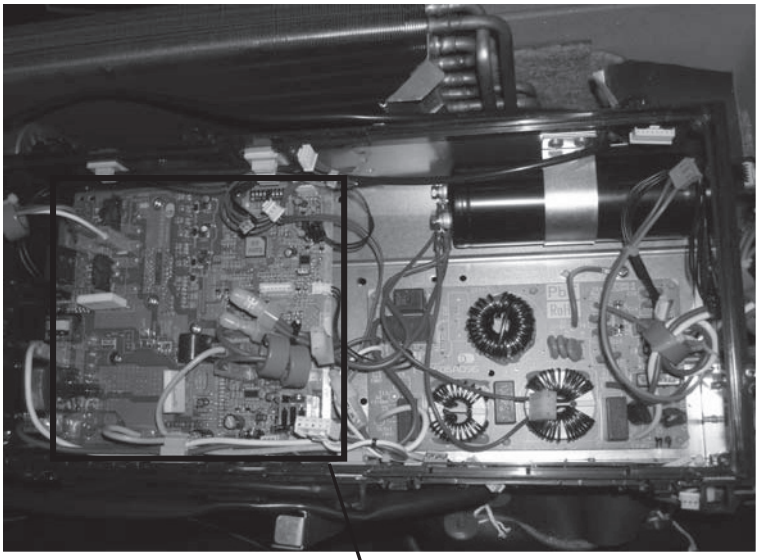

2. Disconnect the connectors

3. Pinch the head of locking support and remove inverter PCB

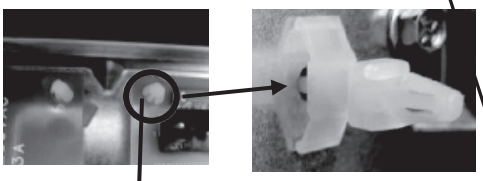

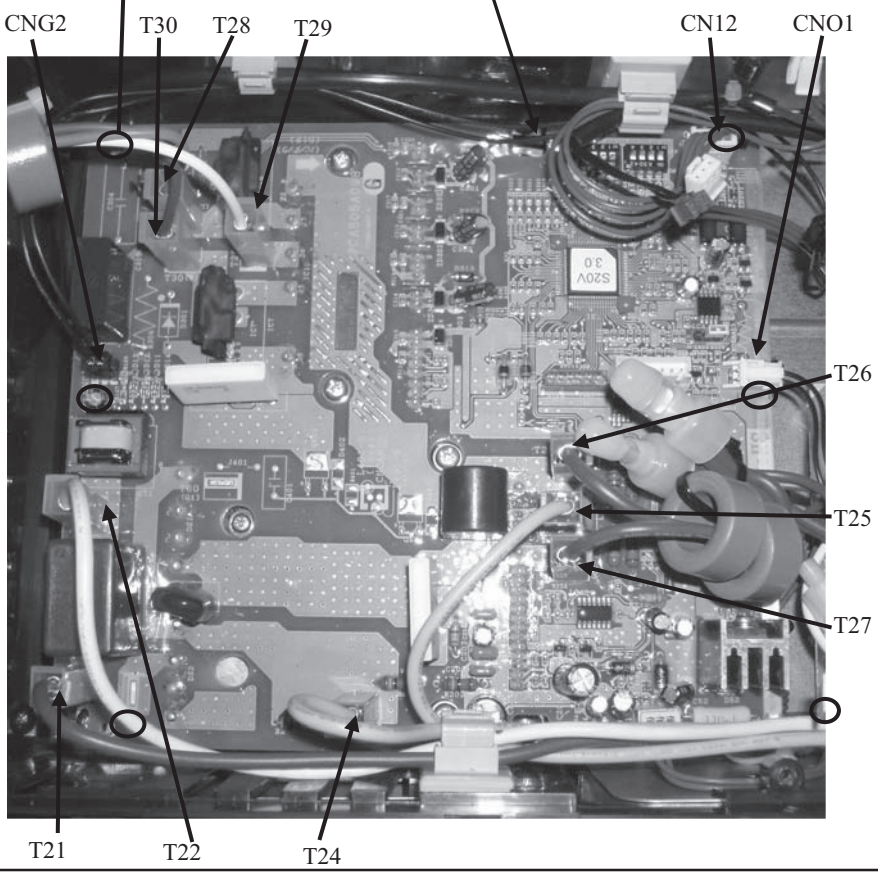

FDCW71VNX

Noise filter PCB (PWB3)

1. Remove control PCB first

Note: Be sure to do this work aftter elapsing 3 minutes from power OFF.

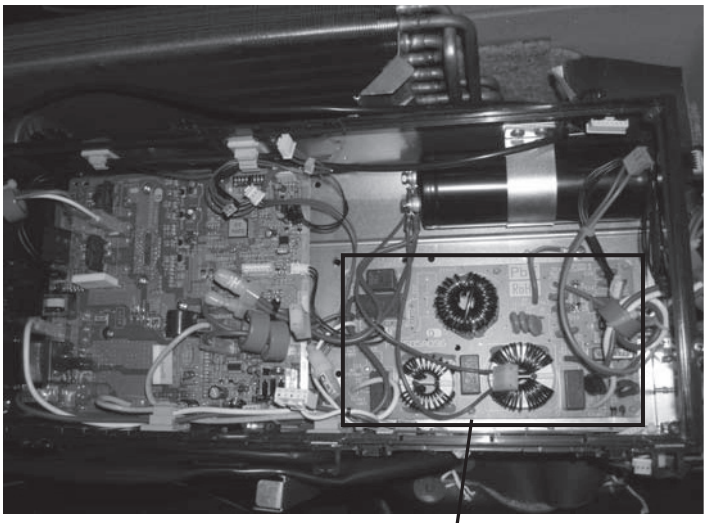

3. Cut straps

4. Disconect the connectors CNA2 and CNO2 on the noise filter PCB

5. Unscrew and remove the grounding cable (T4)

6. Disconnect the connectors and terminals as follows
1) On the inverter PCB
T21 for T5
T22 for T6
2) On the control PCB
CNW for T10 and T11
3) On the terminal block
L1 for T1
N for T2
1 for T8
2 for T9

7. Pinch the head of locking support and remove the noise filter PCB.

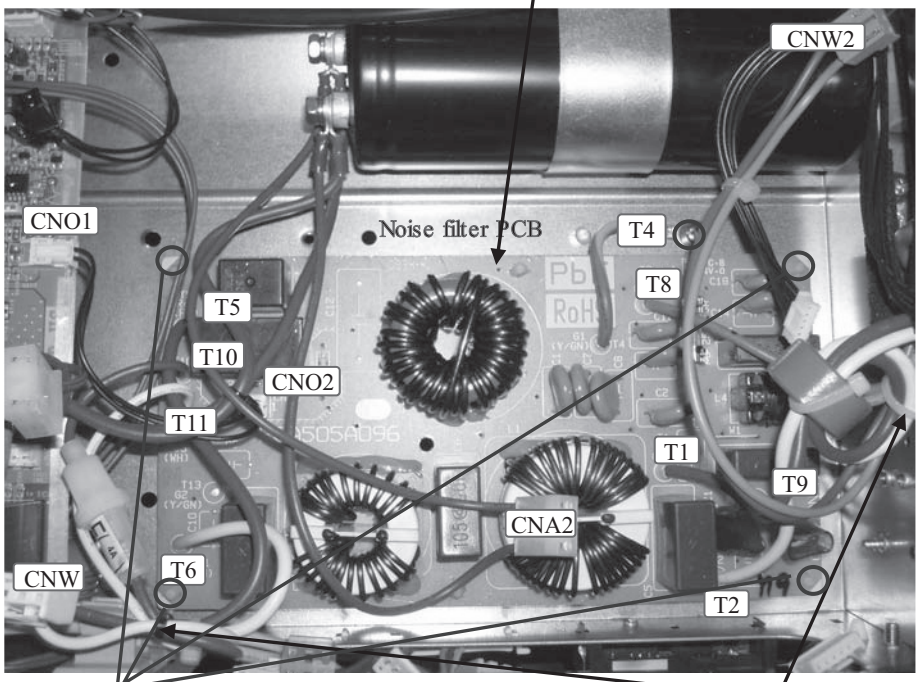

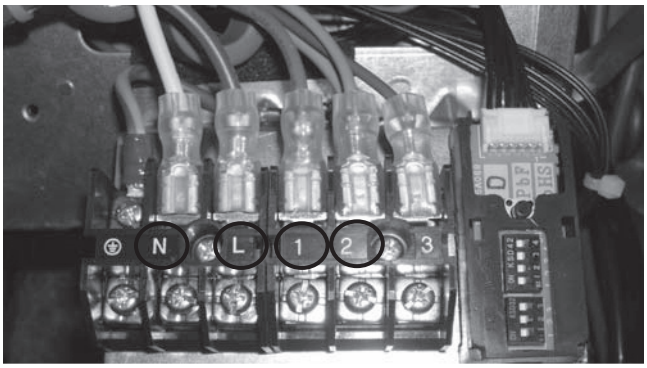

FDCW100VNX

Fan and fan motor (FMo1)	
1. Loosen 4 screws and remove the fan grille	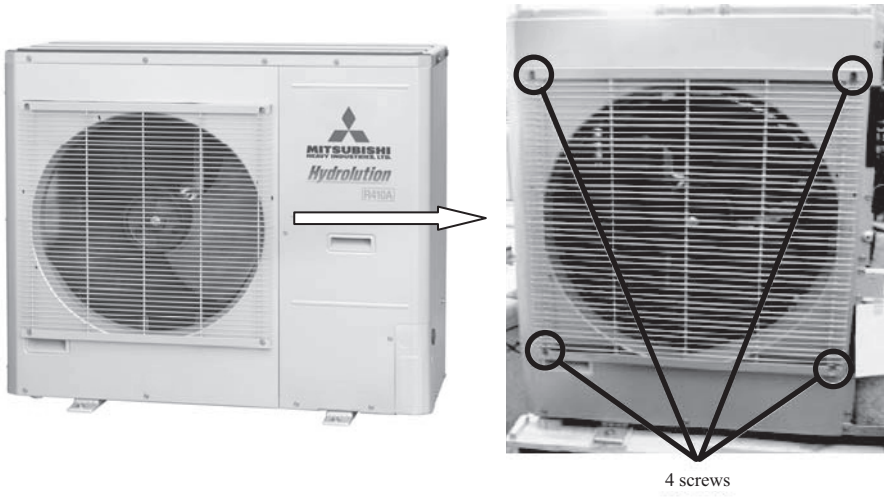
2. Loosen the nut and remove the fan propeller	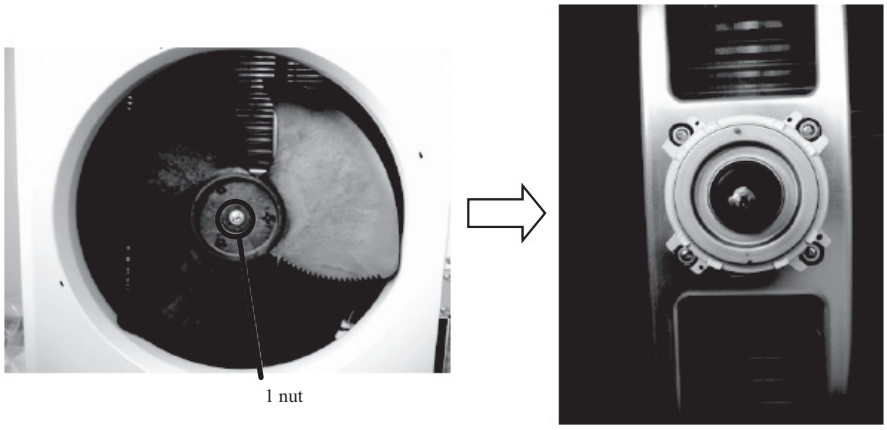
3. Detach the clamps and cut off the straps **4.** Disconnect the connector of CNFAN1	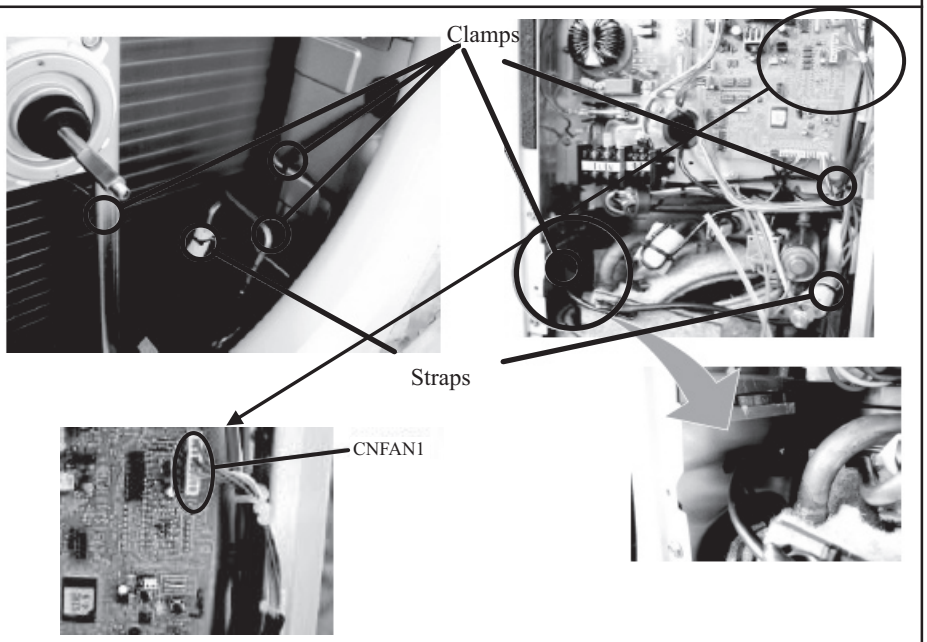

FDCW100VNX

Fan and fan motor (FMo1)	
5. Loose 4 screws **6.** Remove the fan motor	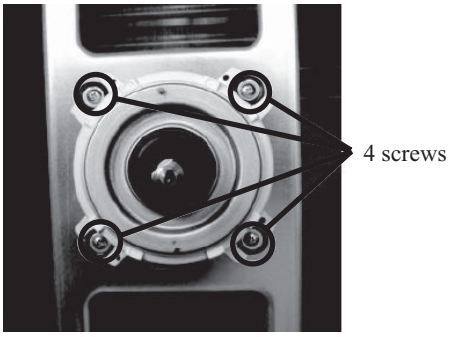

Compressor (CM)	
1. Loosen screws and remove the service panel and top panel. **2.** Loosen 4 short screws and 4 long screws and then remove the bar for easy access to the compressor.	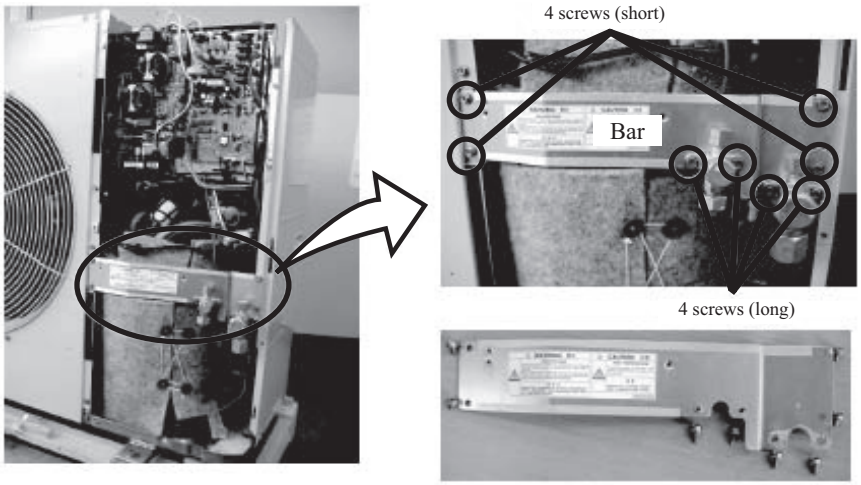
3. Loosen screws and remove the side panel	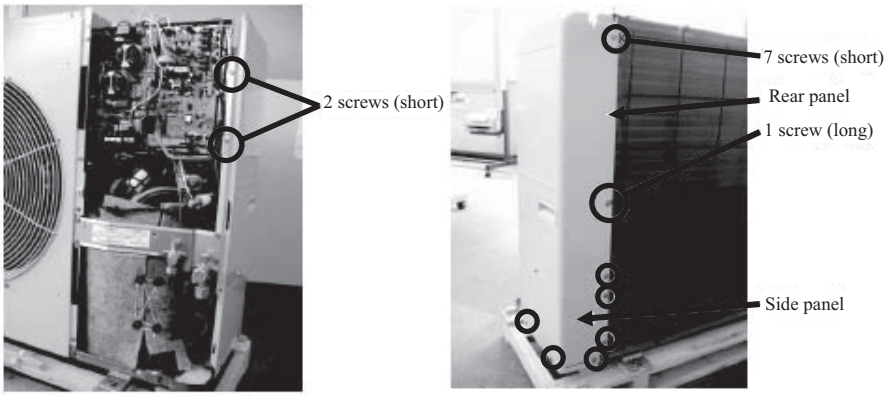

FDCW100VNX

Compressor (CM)

4. Remove the top insulation

5. Remove the terminal cover

6. Disconnect the fasten terminal connectors from compressor.
U: Red cable
V: White cable
W: Blue cable

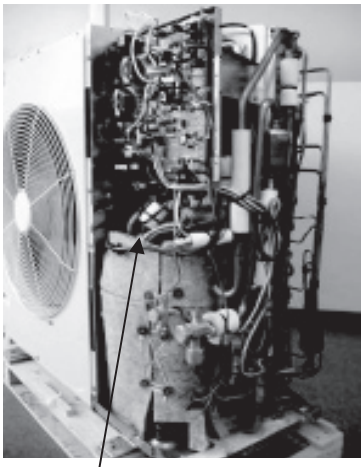

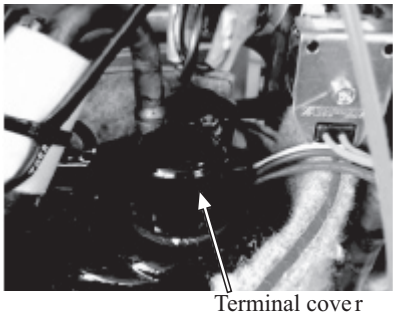

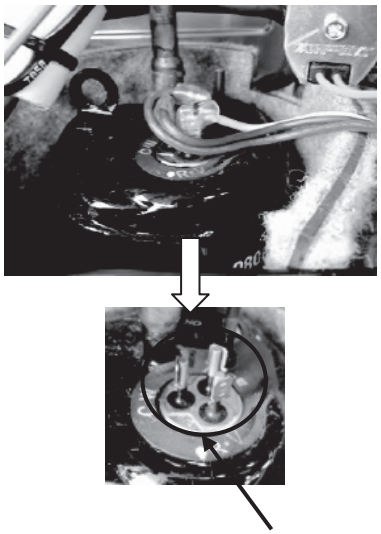

7. Cut off the strap and pull out the sensor (Tho-D)

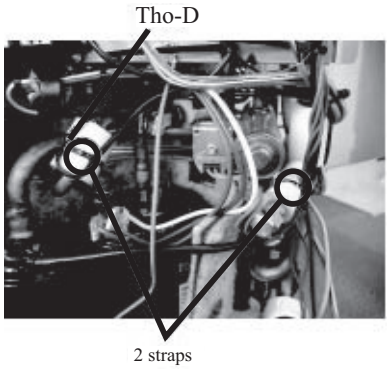

8. Remove the control unit for easy replacement work of compressor according to following procedure.

1) Disconnect all connectors shown in the photo

2) Cut off the straps

3) Unscrew and disconnect the grounding cable

4) Loosen the screws shown in the photo.

5) Remove the control unit.

Note: Be sure to do above work after elapsing 3 minutes from power OFF.

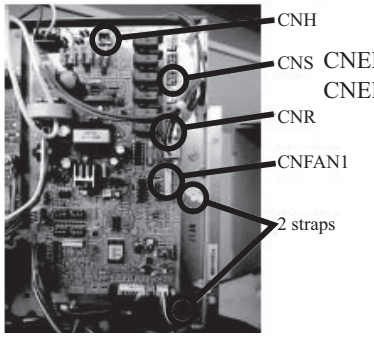

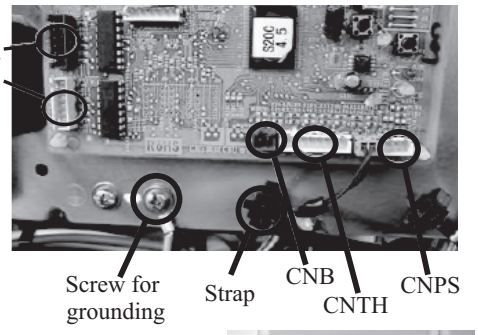

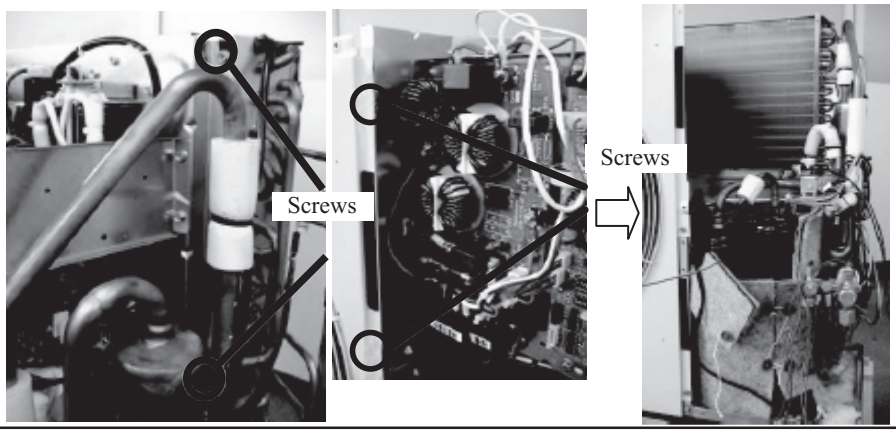

FDCW100VNX

Compressor (CM)

9. Untie the strings and remove the insulations

10. Unscrew and disconnect the grounding cable

11. Loosen 3 nuts of compressor fixing bolts

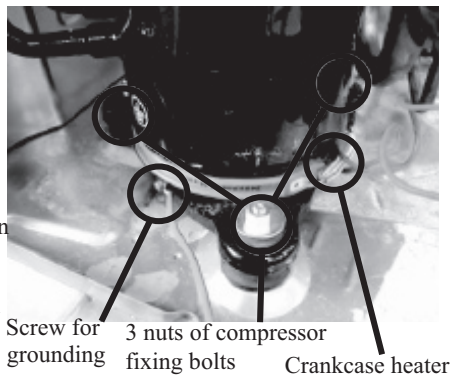

12. Disconnect the pipes for suction and discharge gas

13. Remove the compressor

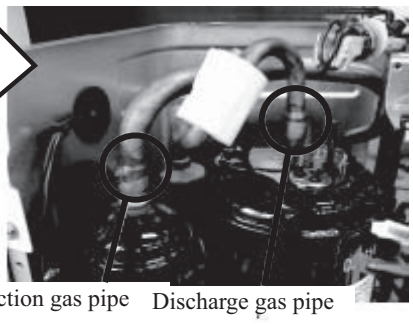

Control PCB (PWB1)

1. Unscrew and disconnect the cable

2. Cut the straps and take the cable out from CT hole as shown in the photo.

Note: Be sure to do this work after elapsing 3 minutes from power OFF.

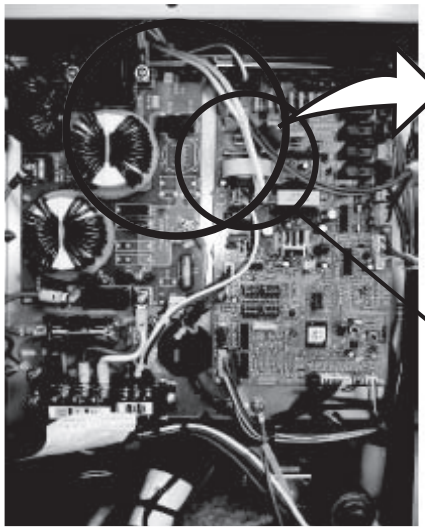

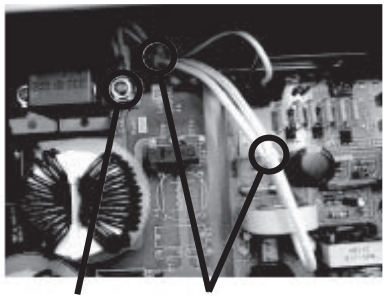

FDCW100VNX

Control PCB (PWB1)	
3. Disconnect all connectors	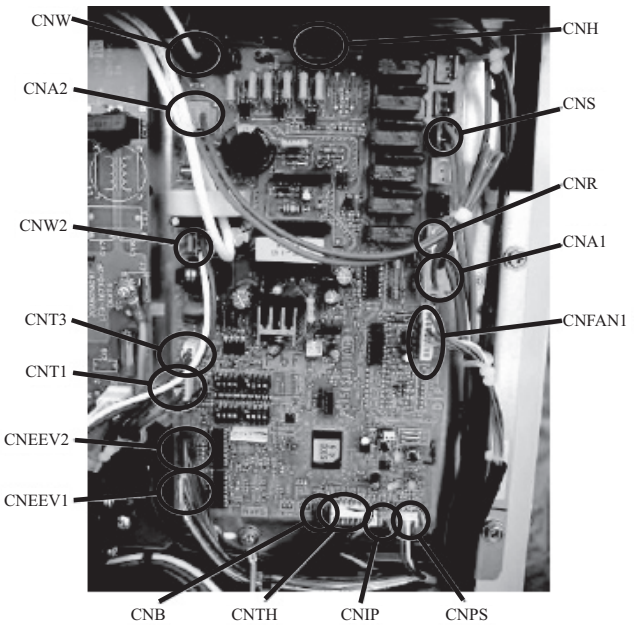
4. Pinch the head of locking supports and remove the control PCB.	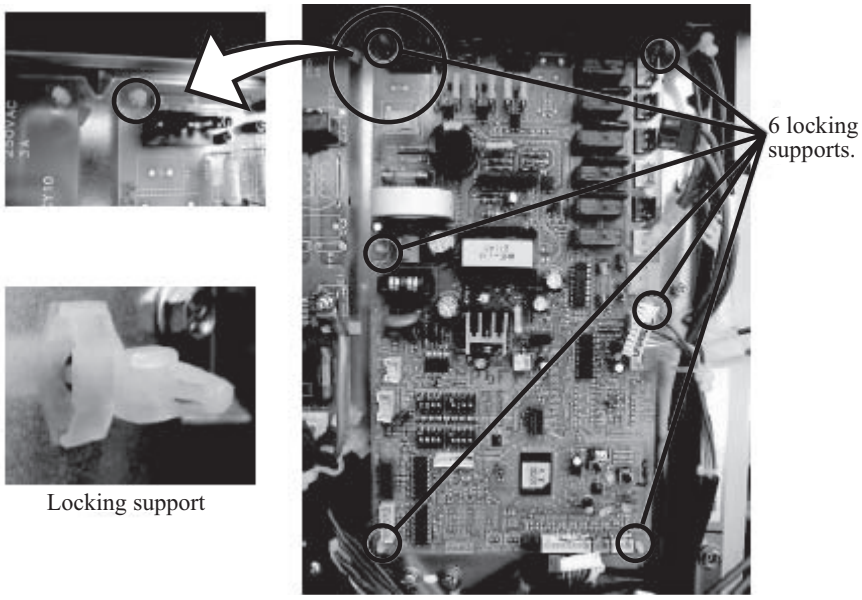

FDCW100VNX

Inverter PCB (PWB2)

1. Loosen 7 screws and remove the control PCB layer.

Note: Be sure to do this work after elapsing 3 minutes from power OFF.

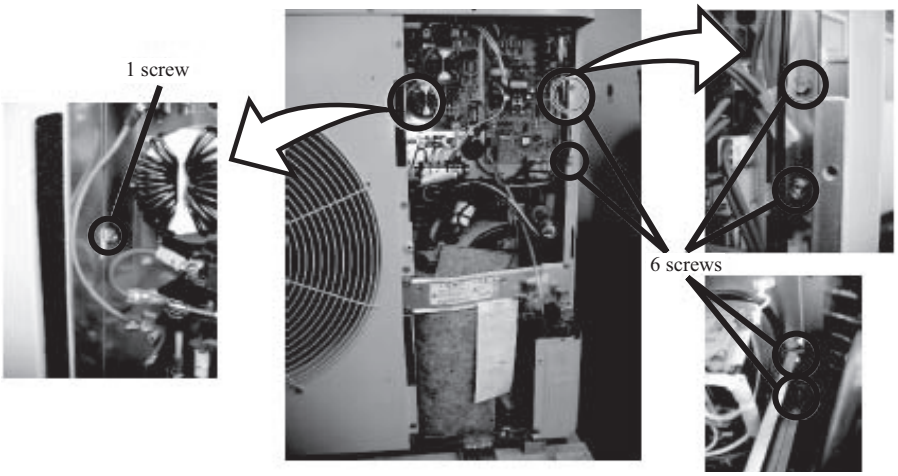

2. Disconnect the connectors of CNI2, CNI4 and CNACT1

3. Loosen 9 screws and disconnect the cables

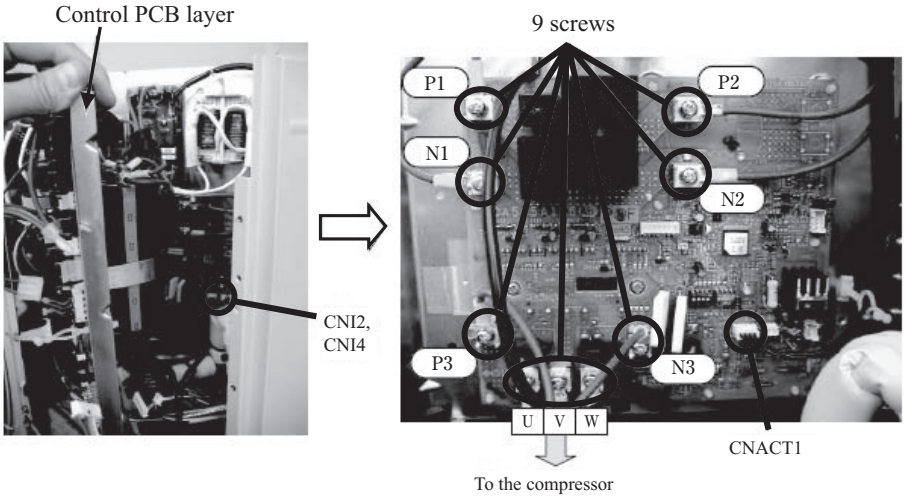

4. Loosen 2 screws and pinch the heads of 9 locking supports and then remove inverter PCB

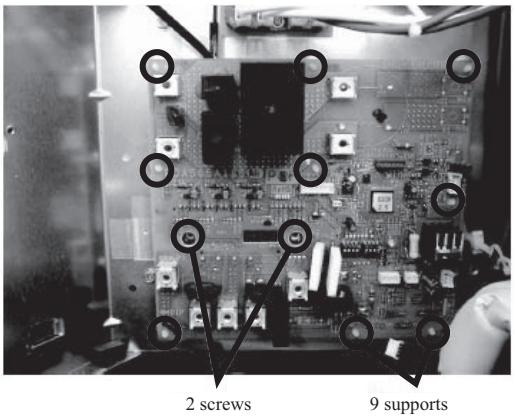

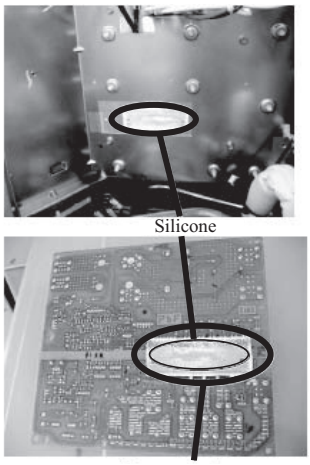

FDCW100VNX

Noise filter PCB (PWB3)	
1. Loosen 6 screws and disconnect the cables **2.** Disconnect the connector Note: Be sure to do this work after elapsing 3 minutes from power OFF.	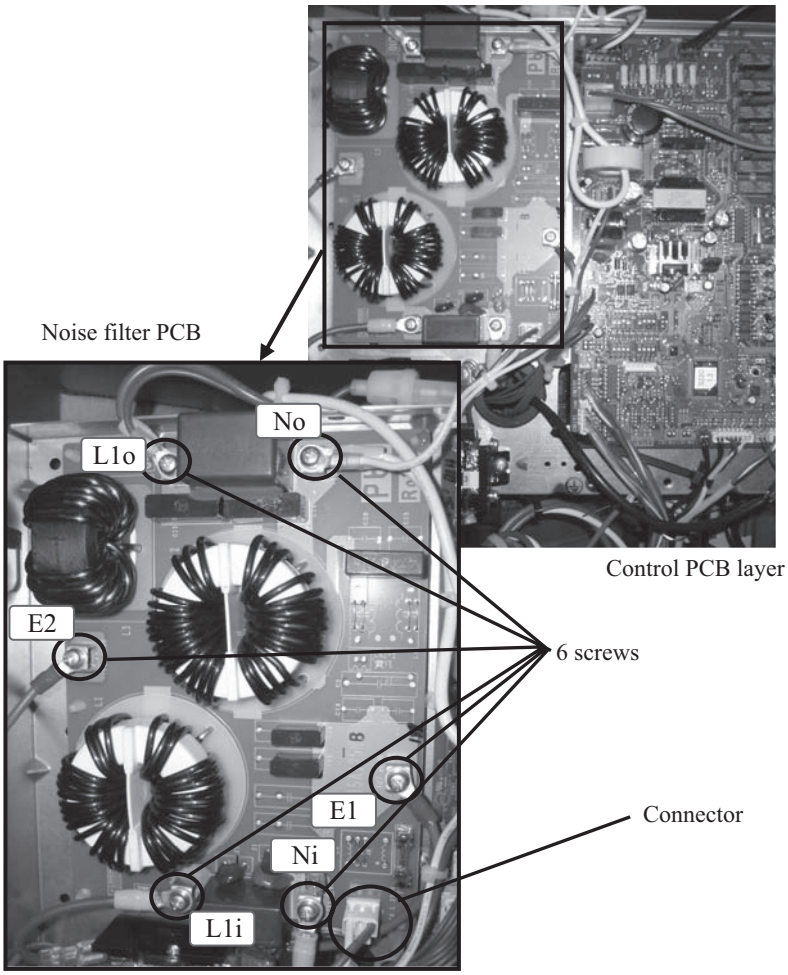
3. Pinch the head of locking support and remove the noise filter PCB	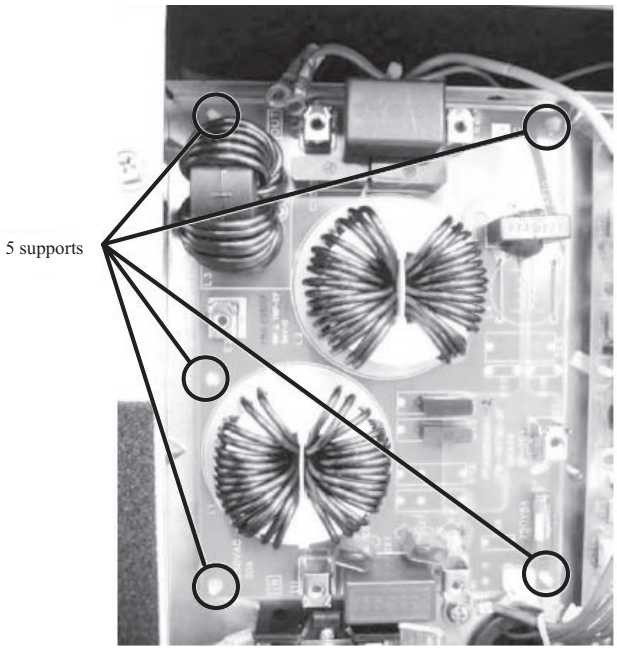

FDCW140VNX

Fan and fan motor (FMo1& FMo2)	
1. Loosen the screws and remove the fan grille for upper fan (FMo1) and/or lower fan (FMo2).	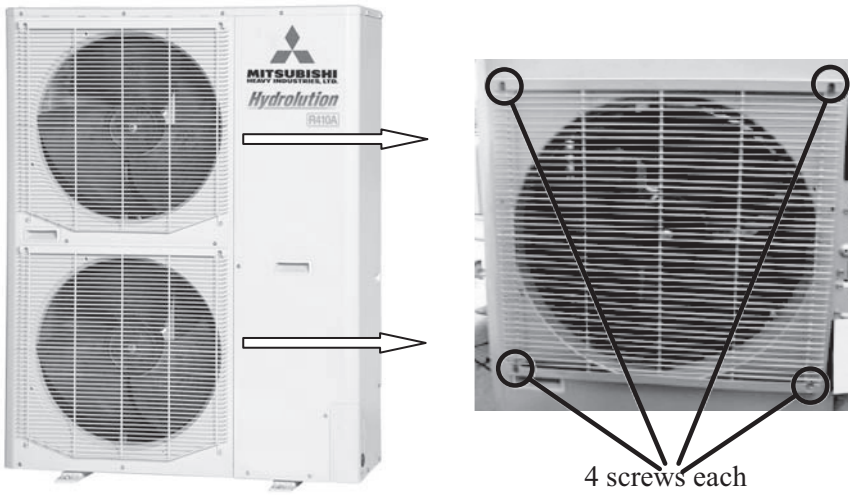
2. Loosen the nut and remove the fan propeller for upper fan (FMo1) and/or lower fan (FMo2)	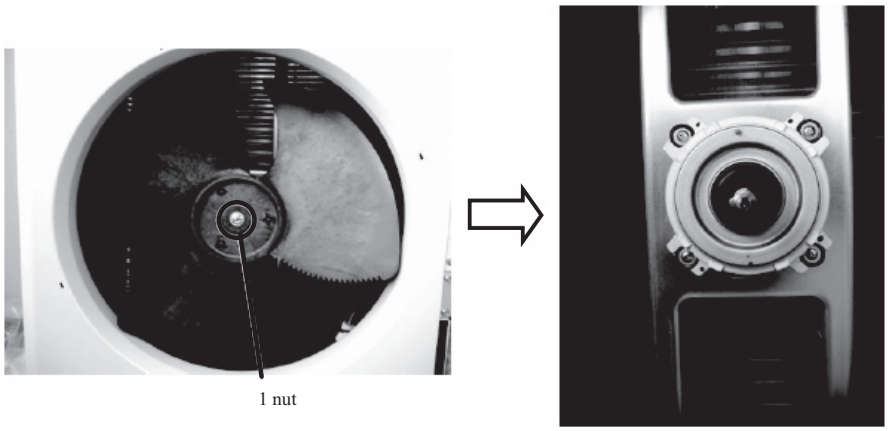
3. Disconnect the connector of CNFAN1 (for FMo1) and/or CNFAN2 (for FMo2)	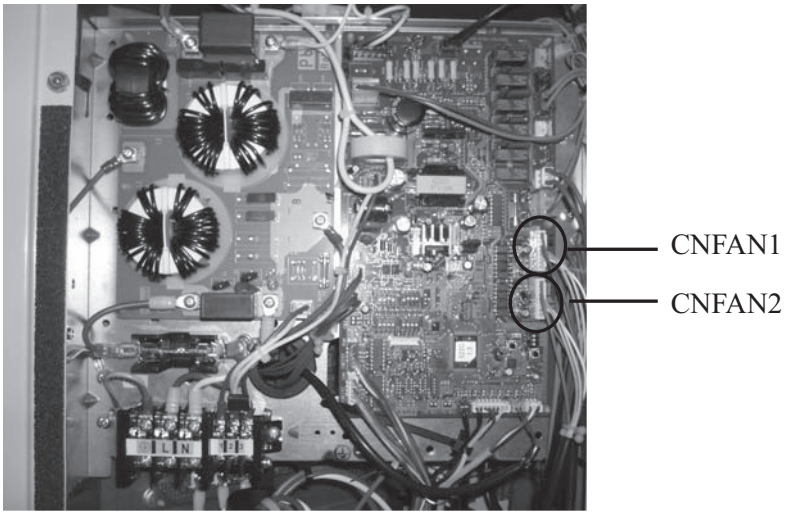

FDCW140VNX

Fan and fan motor (FMo1& FMo2)	
4. Detach the clamps and cut off the straps	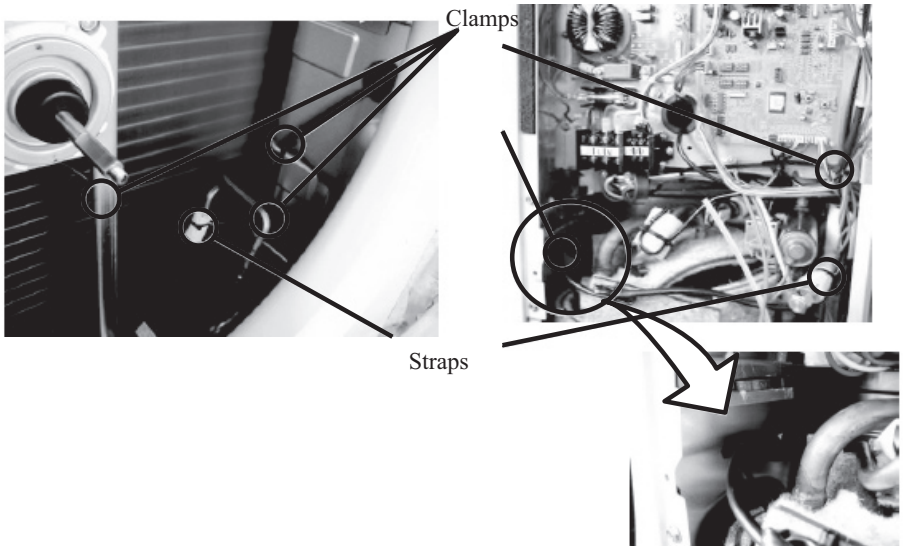
5. Loosen 4 screws **6.** Remove the fan motor (FMo1 and/or FMo2)	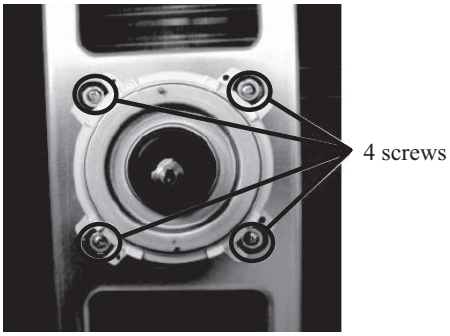

Compressor (CM)	
1. Loosen 5 screws and remove the service panel	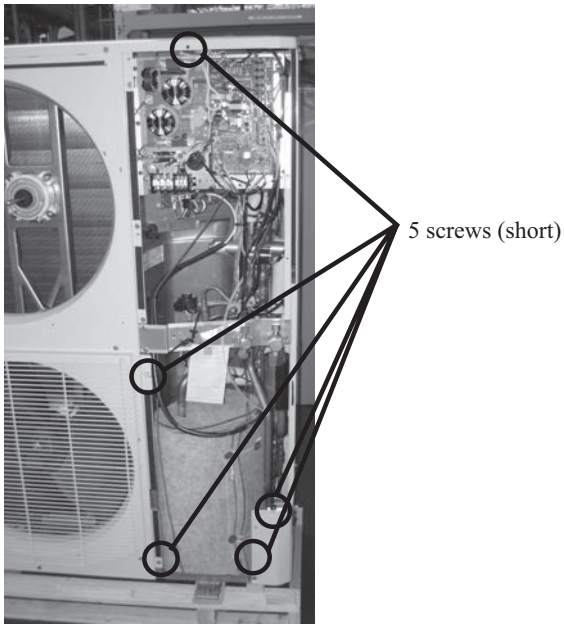

FDCW140VNX

Compressor (CM)	
2. Untie the strings and remove the top and side insulations **3** Cut off the strap and pull out the sensor (Tho-D)	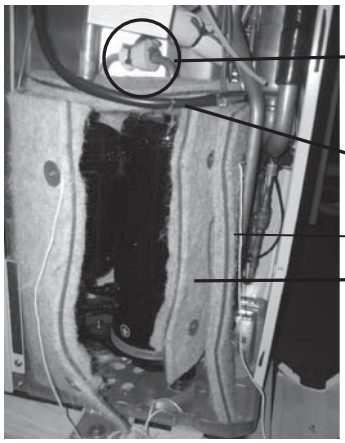
4. Remove the terminal cover **5.** Disconnect the fasten connectors from compressor. U: Red cable V: White cable W: Blue cable	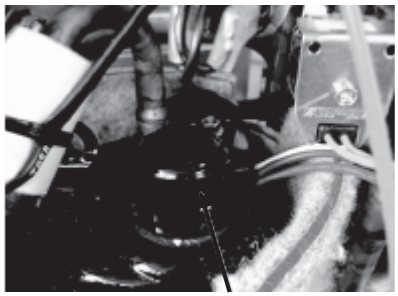 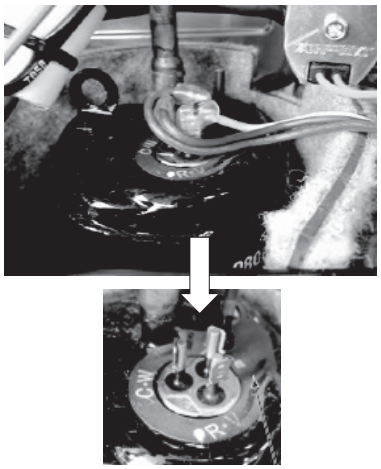
6. Remove the crankcase heater **7.** Unscrew and disconnect the grounding cable **8.** Loosen 3 nuts of compressor fixing bolts	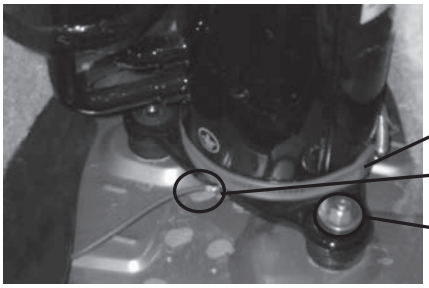
9. Disconnect the pipes for suction and discharge gas **10.** Remove the compressor	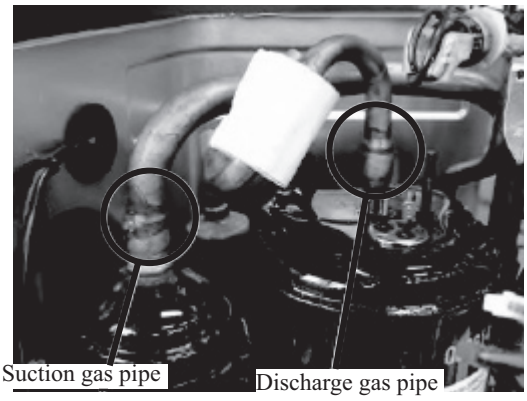

FDCW140VNX

Control PCB (PWB1)

1. Unscrew and disconnect the cable

2. Cut the strap and take the cable out from CT hole as shown in the photo

Note: Be sure to do this work after elapsing 3 minutes from power OFF.

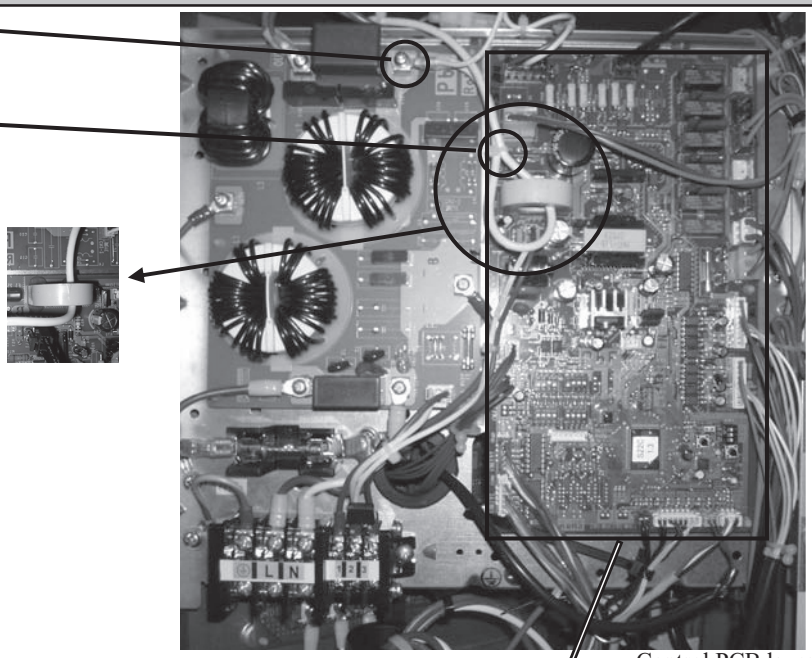

3. Disconnect all connectors

4. Pinch the head of locking support and remove the control PCB.

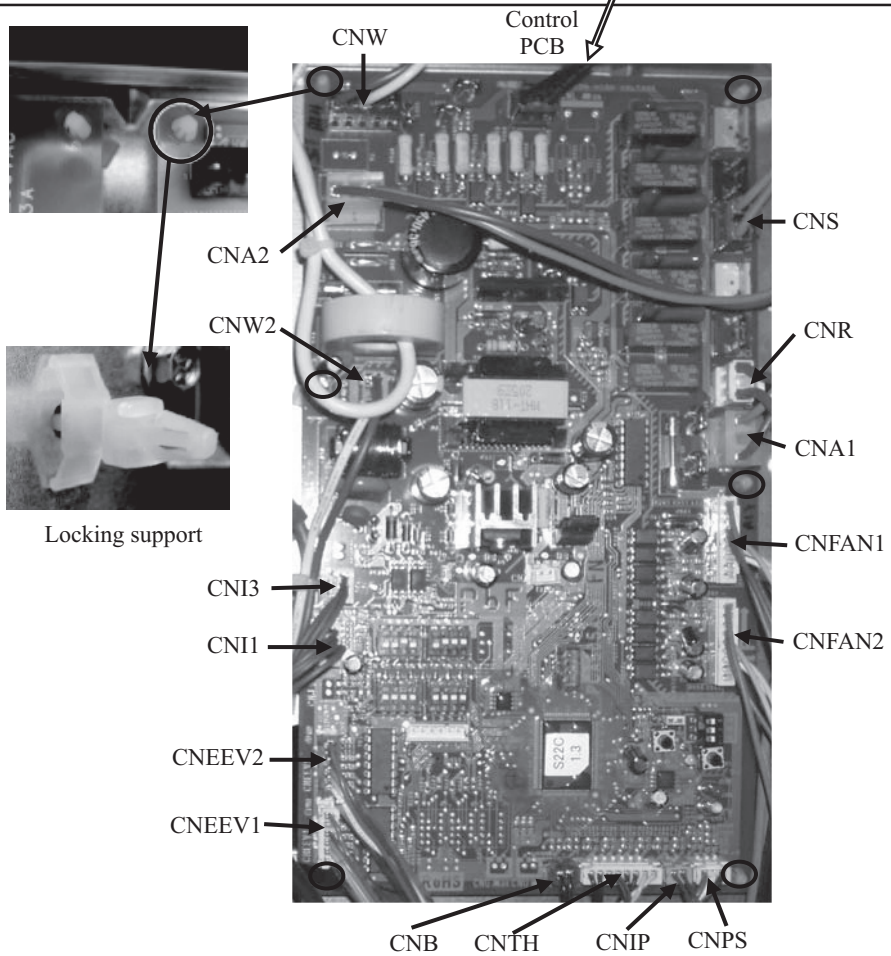

FDCW140VNX

Inverter PCB (PWB2)

1. Loosen 2 screws on the bar

2. Loosen 7 screws and remove side pannel

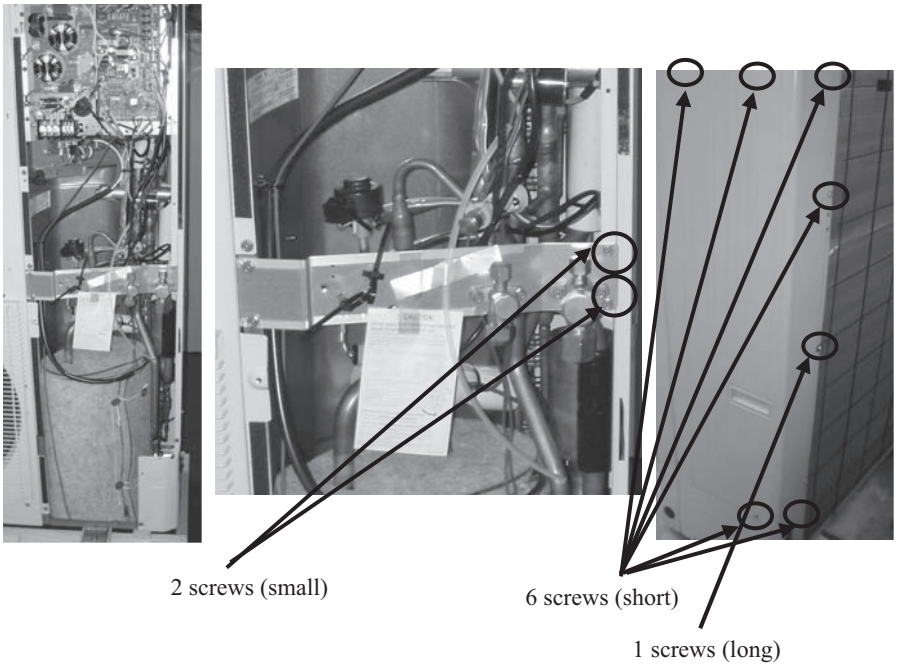

3. Loosen 4 screws and remove the bar for easy access to the inverter PCB layer

Note: Be sure to do this work after elapsing 3 minutes from power OFF.

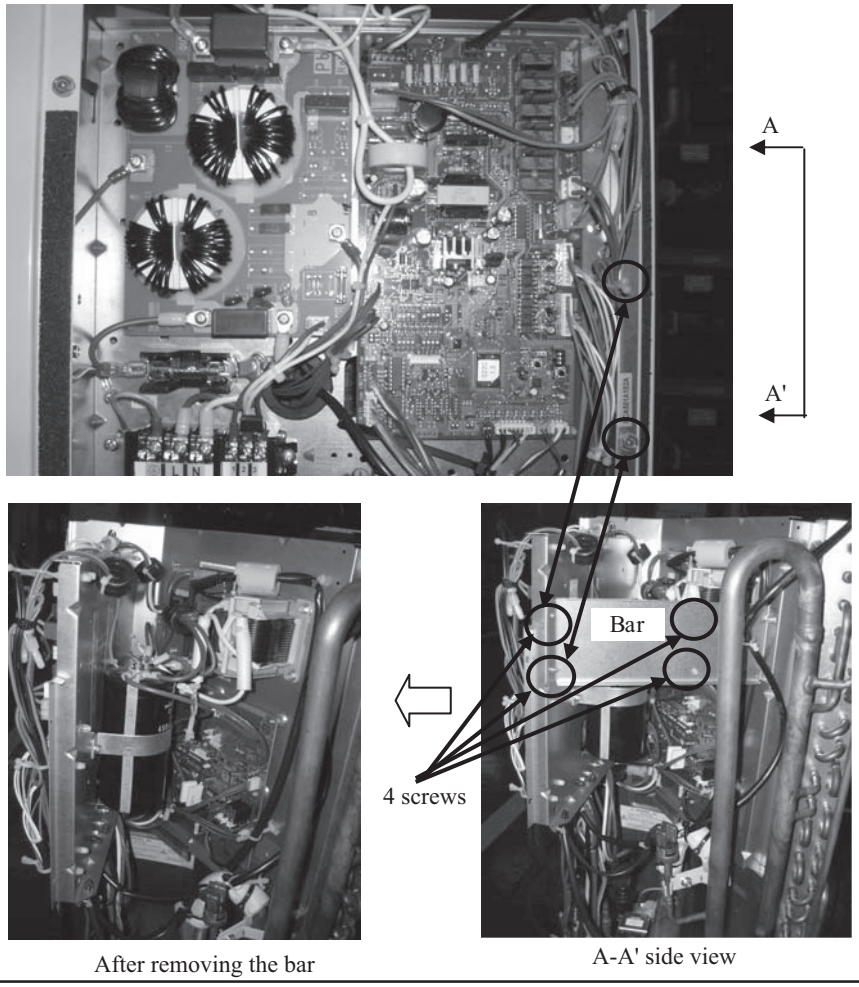

FDCW140VNX

Inverter PCB (PWB2)	
4. Loosen a screw on the capacitor and disconnect the red and blue cables which are connected to the control PCB **5.** Disconnect the fasten terminals of red and white cables which are connected to the control PCB.	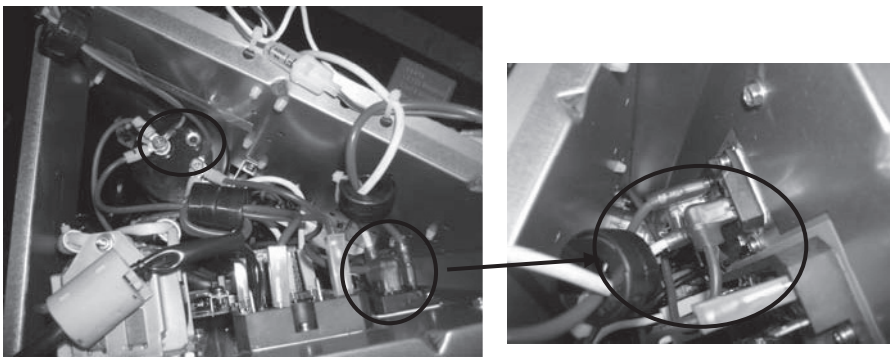
6. Remove the control PCB layer by lifting it up.	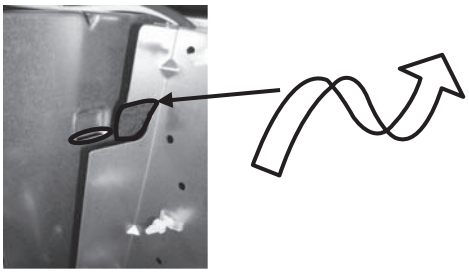
7. Disconnect the connectors of CNI2, CNI4 and CNACT1 **8.** Loosen 9 screws and disconnect the cables	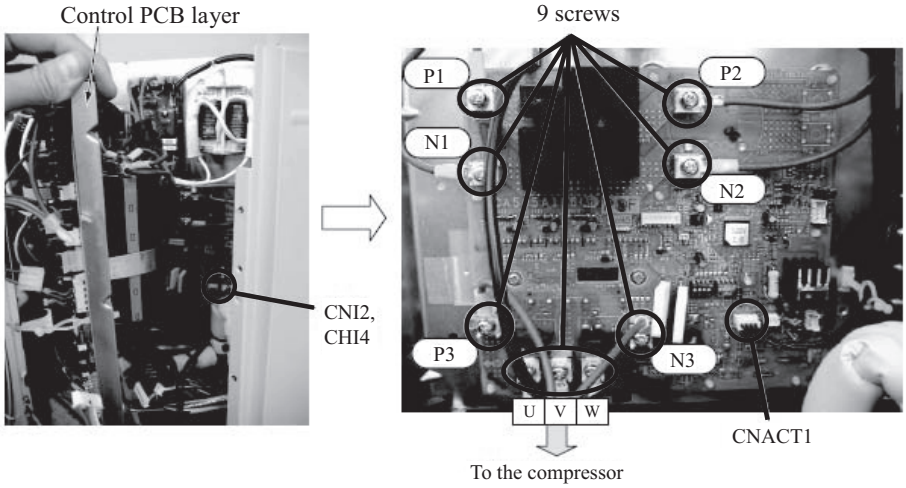
9. Loosen 2 screws and pinch the heads of 9 locking supports and then remove the inverter PCB.	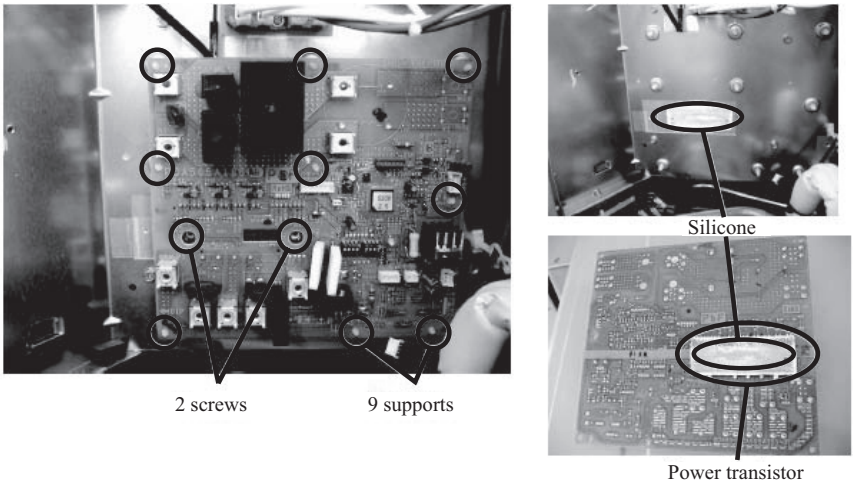

FDCW140VNX

Noise filter PCB (PWB3)	
1. Loosen 6 screws and disconnect the cables **2.** Disconnect the connector Note: Be sure to do this work after elapsing 3 minutes from power OFF.	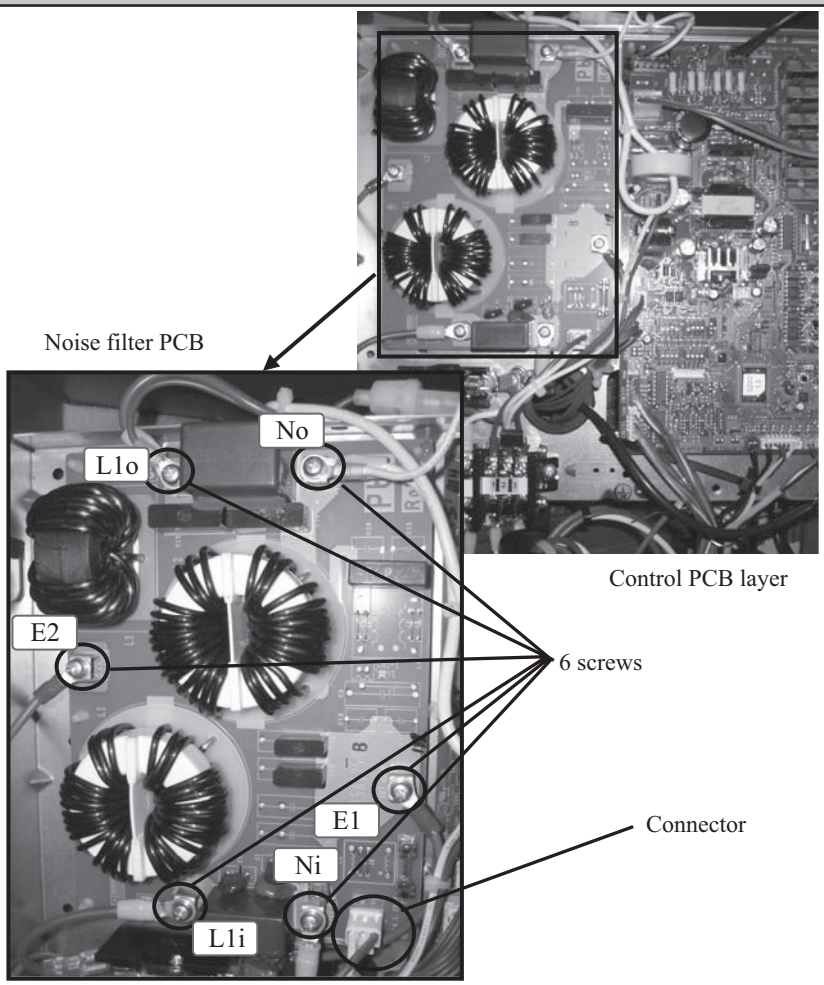
3. Pinch the head of locking support and remove the noise filter PCB	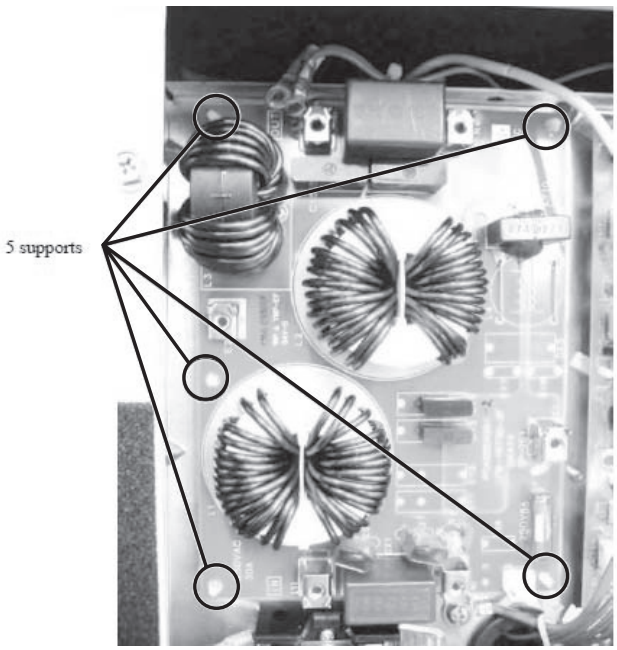

Components

Indoor unit

Circulation pump (GP10)

General

NOTE

The pump must not be operated dry, as this damages the bearings extremely quickly.

Electrical connections

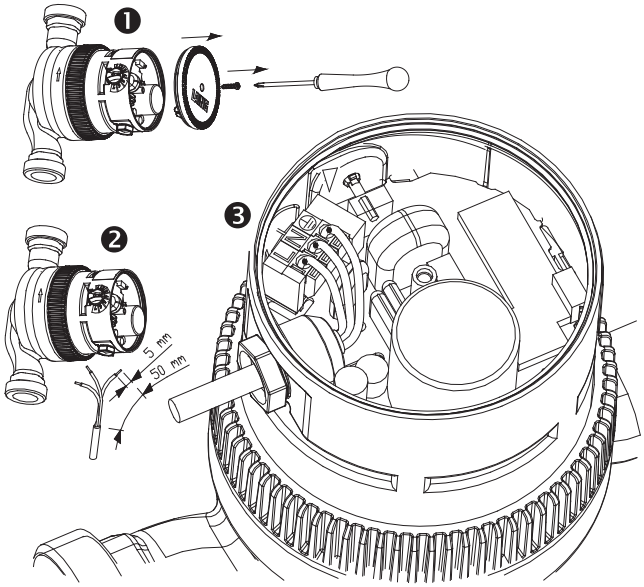

When the electrical connection is correct, the indicator lamp illuminates green continuously.

Disassembly

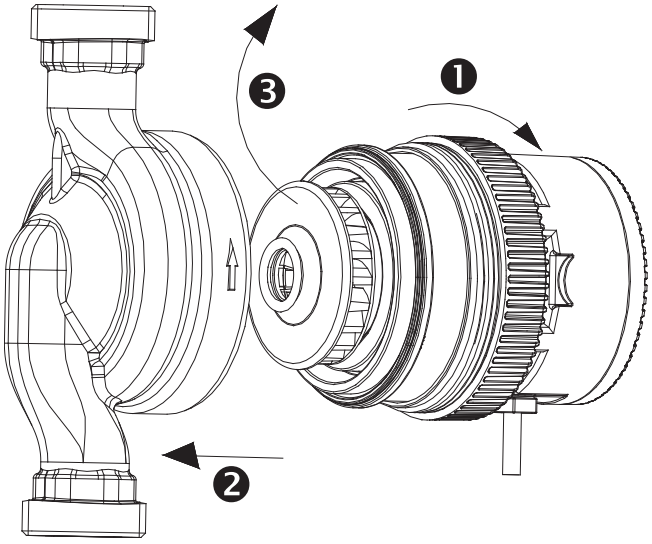

Dimensions

<All models>

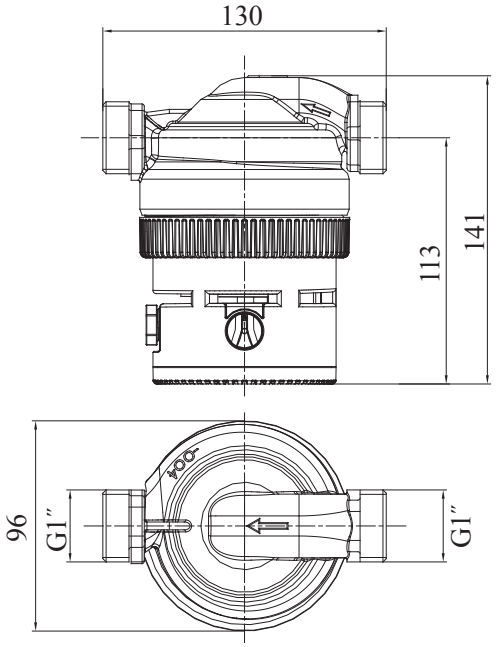

Troubleshooting

Indicator lamp	Cause	Action
Off	The pump is not connected or is incorrectly connected.	- Check the connection. - Power failure. Check power supply and fuses.
1 × short + 1 × long	Low voltage.	- Check supply voltage.
3 × short + 1 × long	Temperature too high.	- The pump restarts automatically.* - Check max. system temperature.
5 × short + 1 × long	Pump blocked.	- Open and clean the pump.

* The pump reduces the voltage automatically (the speed) at 105 °C, to stop completely at 125 °C. When the pump has cooled to 115 °C again, it restarts automatically.

Other faults:

Problem	Cause	Action
Noise from pump.	Air in the system.	- Vent the system.
	Dirt in the pump.	- Open and clean the pump.
	Worn bearings.	- Replace the pump.

Technical specifications

Circulation pump

<HMA100V, HMA100VM>

Max pressure height	6 m
Max volume flow	3000 ℓ/h
Min/max temperature	-10 °C* to +95 °C
Max system pressure	6 bar
Connection	G1” Accessories
Length	130 mm
Voltage	200-240 V
Frequency	50/60 Hz
Output	9–80 W

* Not frozen or condensed

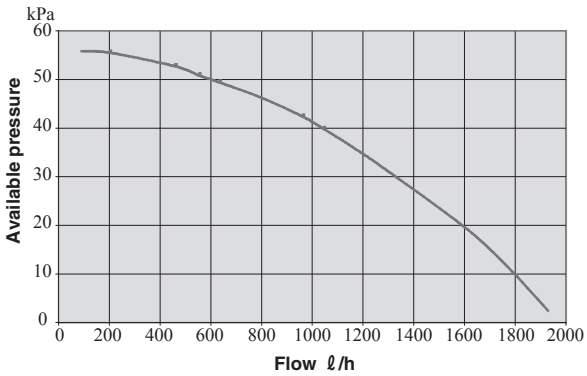

<HMS140V>

Max pressure height	7 m
Max volume flow	3500 ℓ/h
Min/max temperature	-10 °C* to +60 °C
Max system pressure	6 bar
Connection	G1” Accessories
Length	130 mm
Voltage	200-240 V
Frequency	50/60 Hz
Output	9–110 W

* Not frozen or condensed

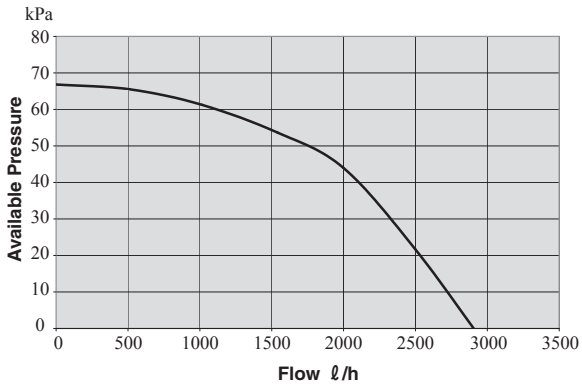

Shuttle valves (QM30, QM31, QN11)

Actuator on 2 way valve

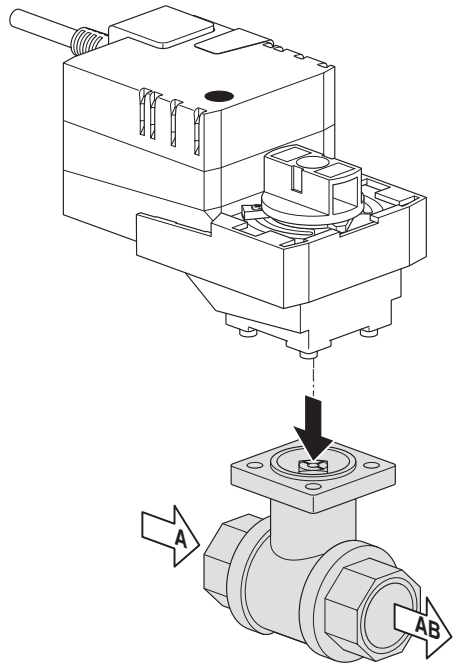

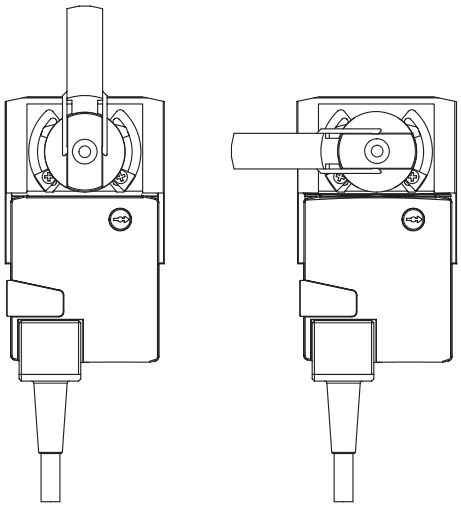

Flow

A - AB = 100%

A - AB = 0%

Actuator on 3 way valve

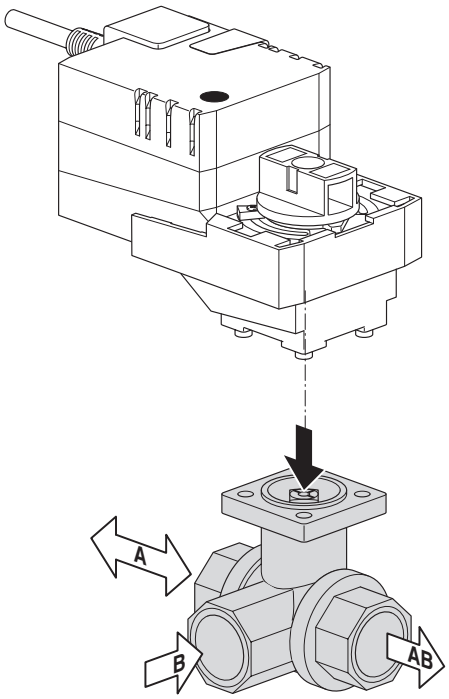

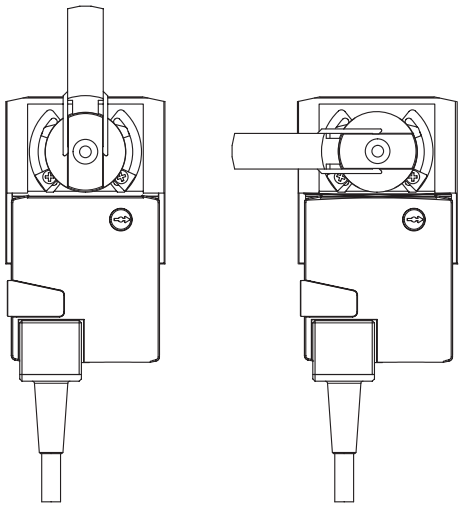

Flow

B - AB = 0%
B - A = 100%

B - AB = 100%
B - A = 0%

Technical data 2 way valve

V415B	
Connection	G1″ ext
Length	74 mm
KVS value	8.6

Dimension 2 way valve

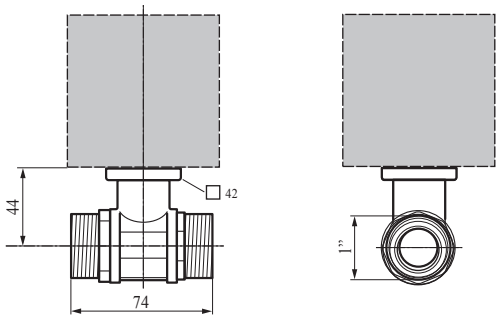

Technical data 3 way valve

V515B	
Connection	G1″ ext
Length	74 mm
KVS value	4.5

Dimension 3 way valve

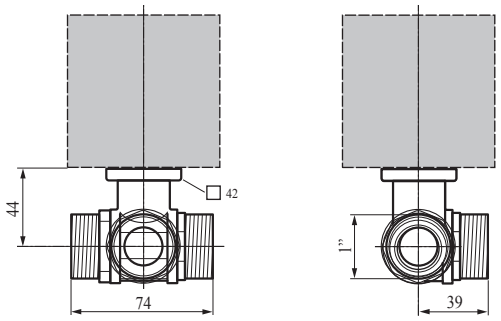

Technical specifications actuator

LR230A-002 LI	
Voltage	AC 100-240 V
Frequency	50/60 Hz
Output	1.5 W
Electrical connections	3 × 0.75 mm^2
Run time	35 s / 90 °

Dimension actuator

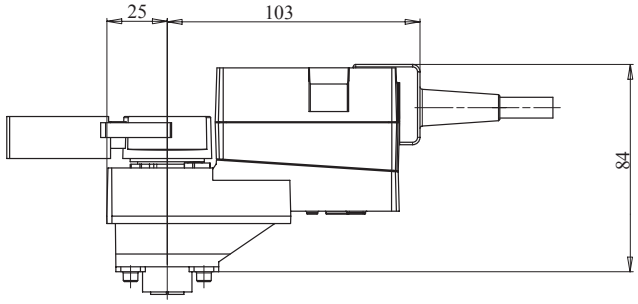

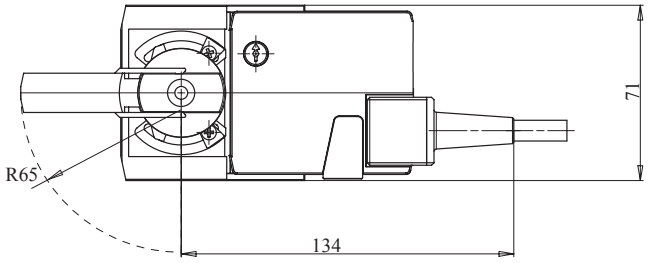

Particle filter (HQ1)

Mesh size	0.8 mm^2
Connection	G1″ ext
Length	118 mm
KVS value	8.6

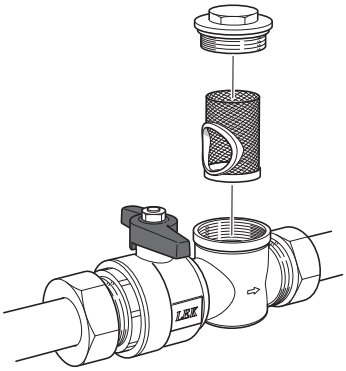

Safety valve (FL2)

Connection inlet	G1/2″ int
Connection outlet	G3/4″ int
Opening pressure	2.5 bar

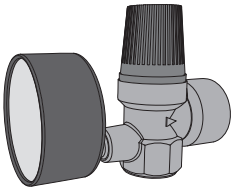

Summary

Component	Symbol	Part no.	
		HMA100	HMS140
Circulation pump	GP1	MCD291A124	MCD291A207
Shuttle valve, 2 way	QM30, QM31	MCD291A135	MCD291A209
Shuttle valve, 3 way	QN11	MCD291A140	MCD291A210
Actuator to shuttle valve	for QN11	MCD291A128	MCD291A128
Pressure sensor	BP4	MCD291A122	MCD291A122
Wiring to pressure sensor	for BP4	MCD291A139	MCD291A139
Heat exchanger	EP2	MCD291A125	MCD291A218
Drying filter	HS1	MCD291A145	MCD291A145
Temperature sensor	BT2-30	MCD291A153	MCD291A153
Outdoor sensor	BT1	MCD291A123	MCD291A123
Particle filter	HQ2	MCD291A138	MCD291A214
Safety valve	FL2	MCD291A142	MCD291A244

Outdoor unit

Compressor

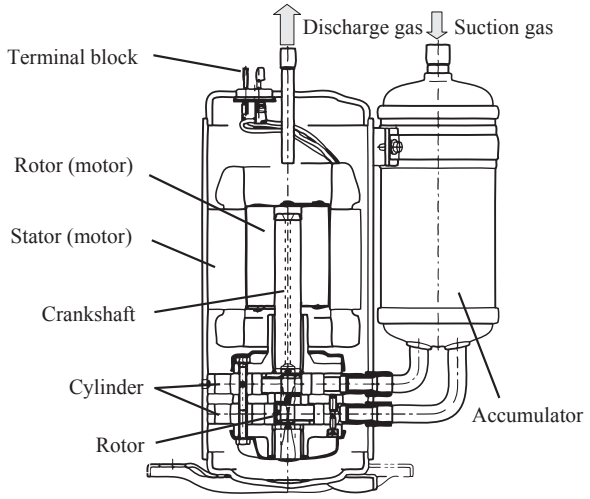

Expansion valve

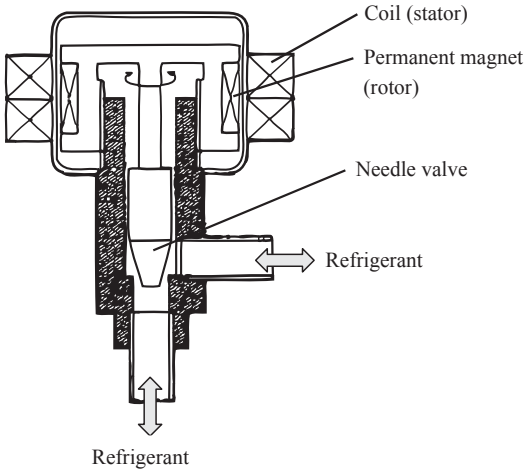

4-way valve

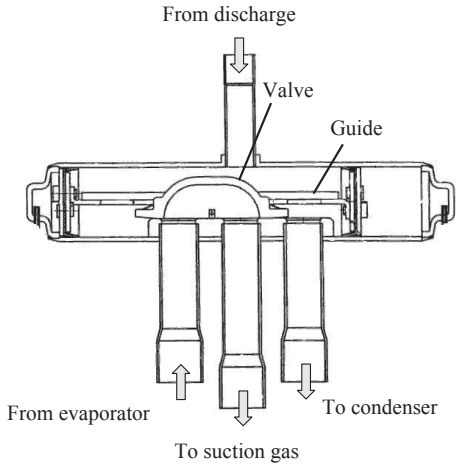

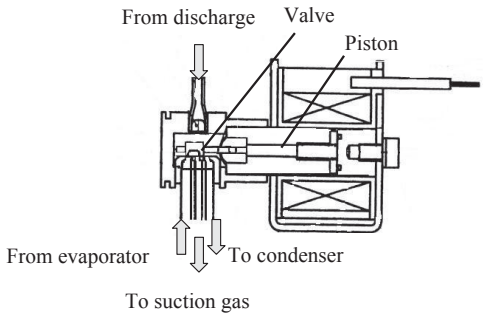

Low pressure sensor

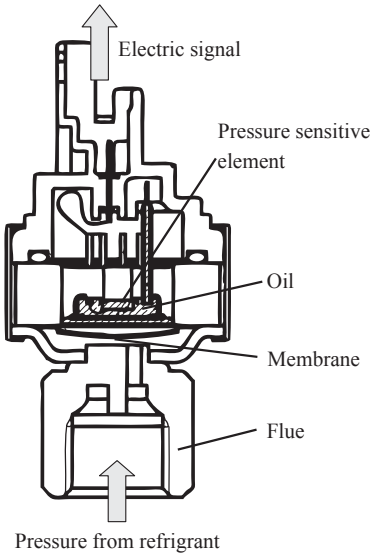

Temperature sensor

Sensor placement

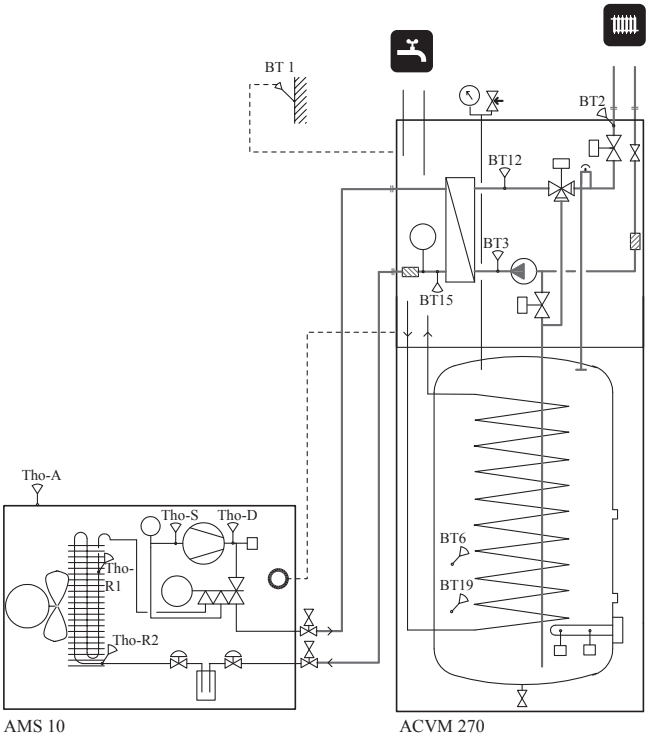

BT1	Temperature sensor, outdoor air (external)
BT2	Temperature sensor, supply
BT3	Temperature sensor, heat exch. in (Twin)
BT6	Temperature sensor, tank water
BT12	Temperature sensor, heat exch. out (Twout)
BT15	Temperature sensor, liquid pipe (Thi-L)
BT19	Temperature sensor, immersion heater
Tho-A	Temperature sensor, outdoor air
Tho-D	Temperature sensor, hot gas
Tho-R1	Temperature sensor, heat exchanger out
Tho-R2	Temperature sensor, heat exchanger in
Tho-S	Temperature sensor, suction gas

Data for sensor in outdoor unit

Tho-D

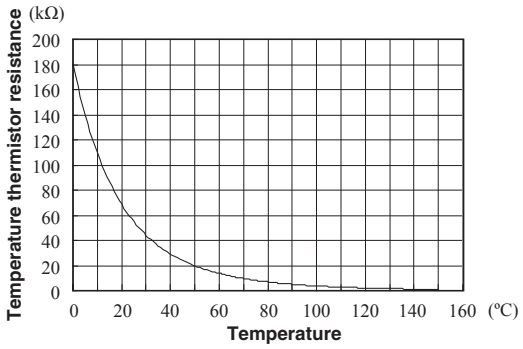

Tho-S, Tho-R1, Tho-R2

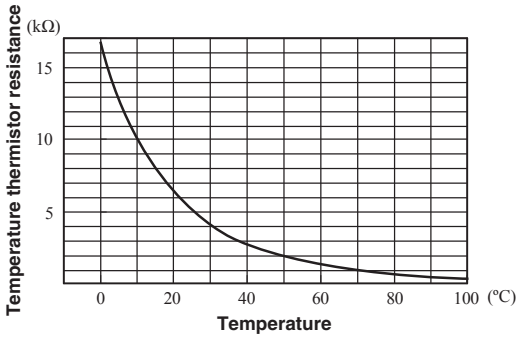

Tho-A

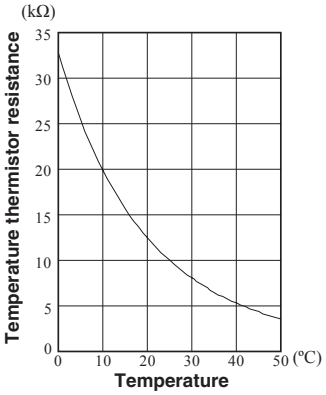

Data for sensor in indoor unit

Temperature (°C)	Resistance (kΩ)	Voltage (V)
-40	102.35	4.78
-35	73.51	4.70
-30	53.44	4.60
-25	39.29	4.47
-20	29.20	4.31
-15	21.93	4.12
-10	16.62	3.90
-5	12.71	3.65
0	9.81	3.38
5	7.62	3.09
10	5.97	2.80
15	4.71	2.50
20	3.75	2.22
25	3.00	1.95
30	2.42	1.70
35	1.96	1.47
40	1.60	1.27
45	1.31	1.09
50	1.08	0.94
60	0.746	0.70
70	0.525	0.51

Component positions

Indoor unit

Component image

HMA100V, HMA100VM

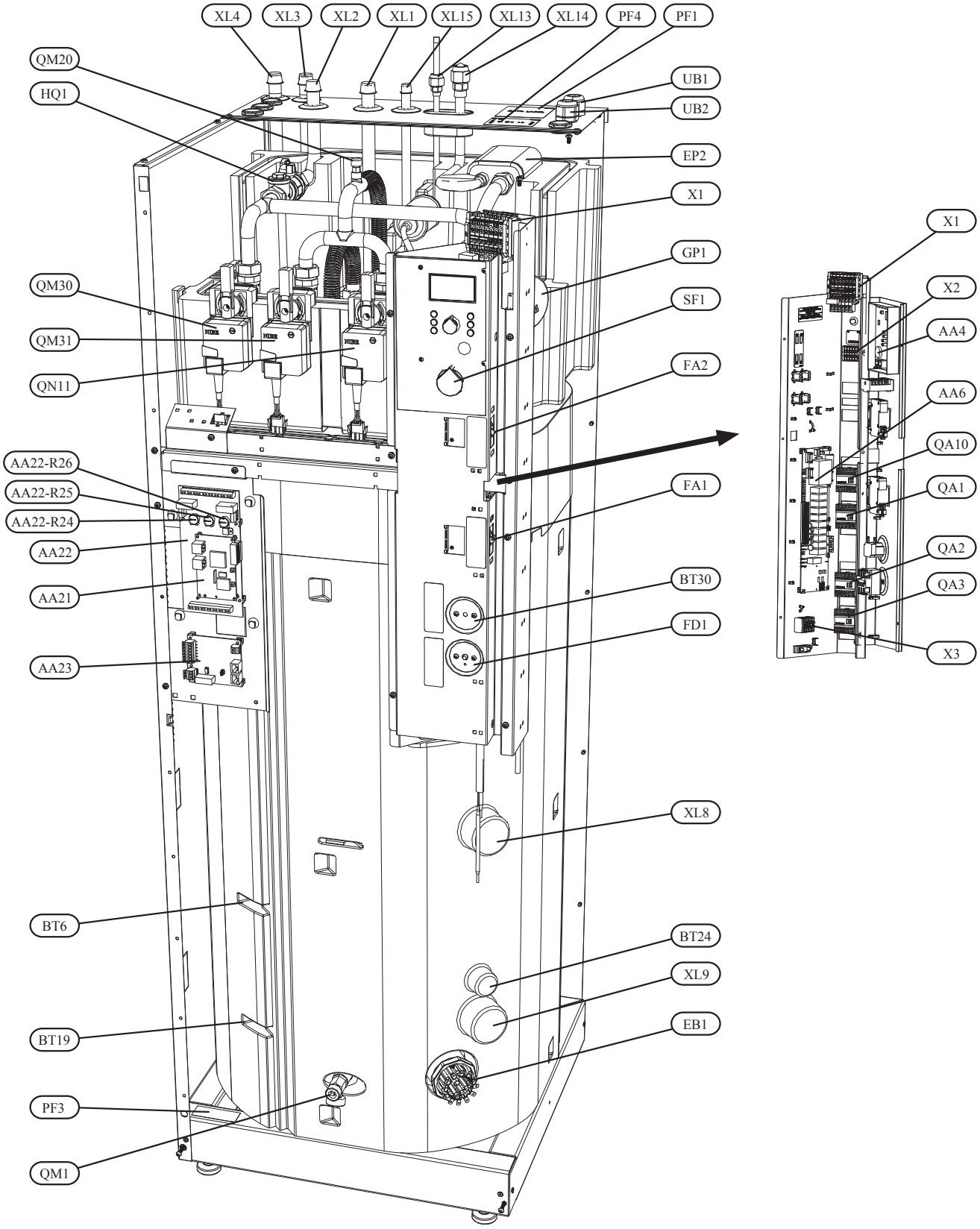

HMS140V

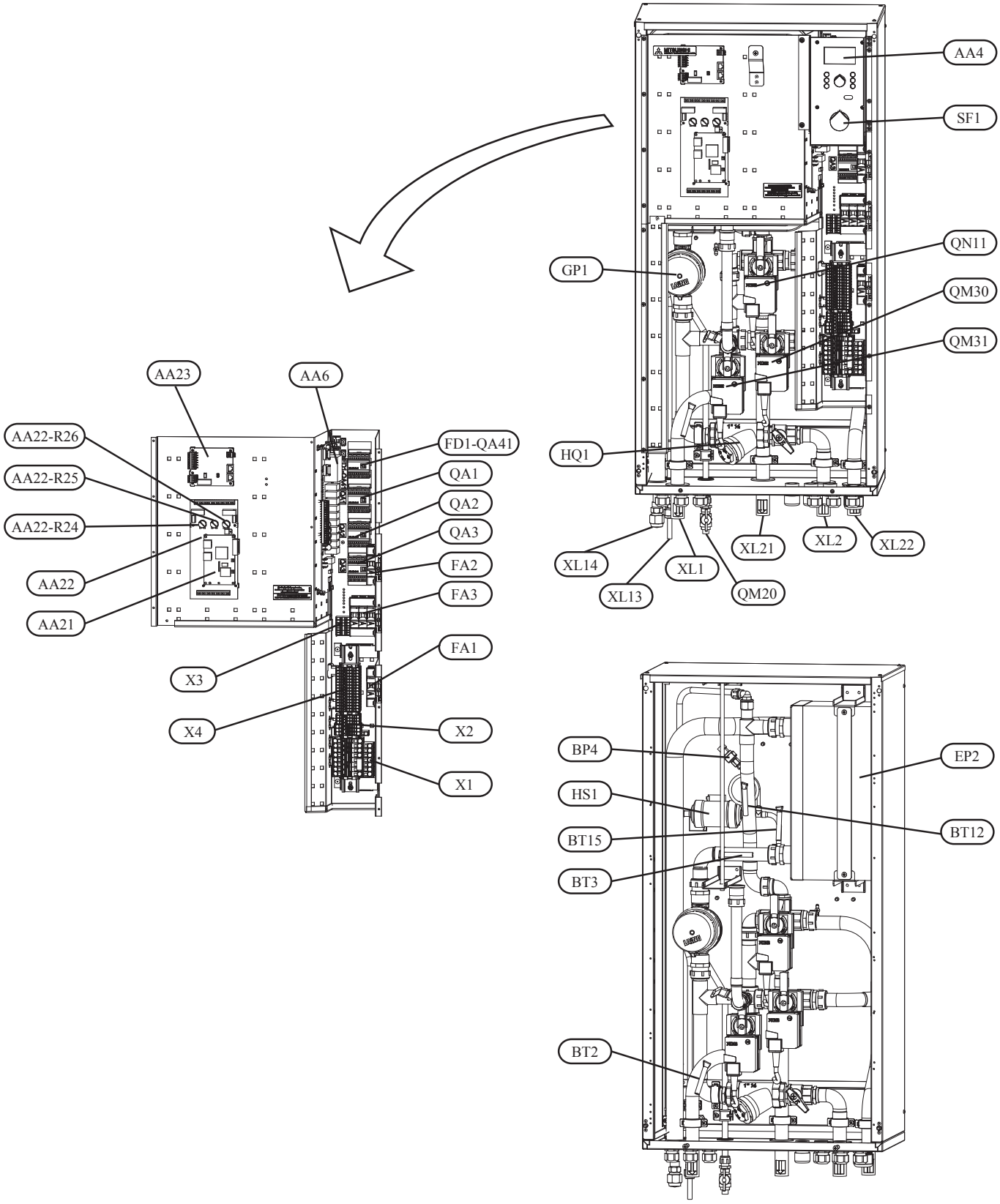
AA4
SF1
QN11
GP1
QM30
QM31
AA23
AA6
AA22-R26
FD1-QA41
HQ1
AA22-R25
QA1
QA2
AA22-R24
QA3
FA2
XL21
XL2
XL22
XL14
XL1
AA22
FA3
XL13
QM20
AA21
FA1
X3
X4
X2
BP4
EP2
X1
HS1
BT12
BT15
BT3
BT2

HT30

TBD

MT300

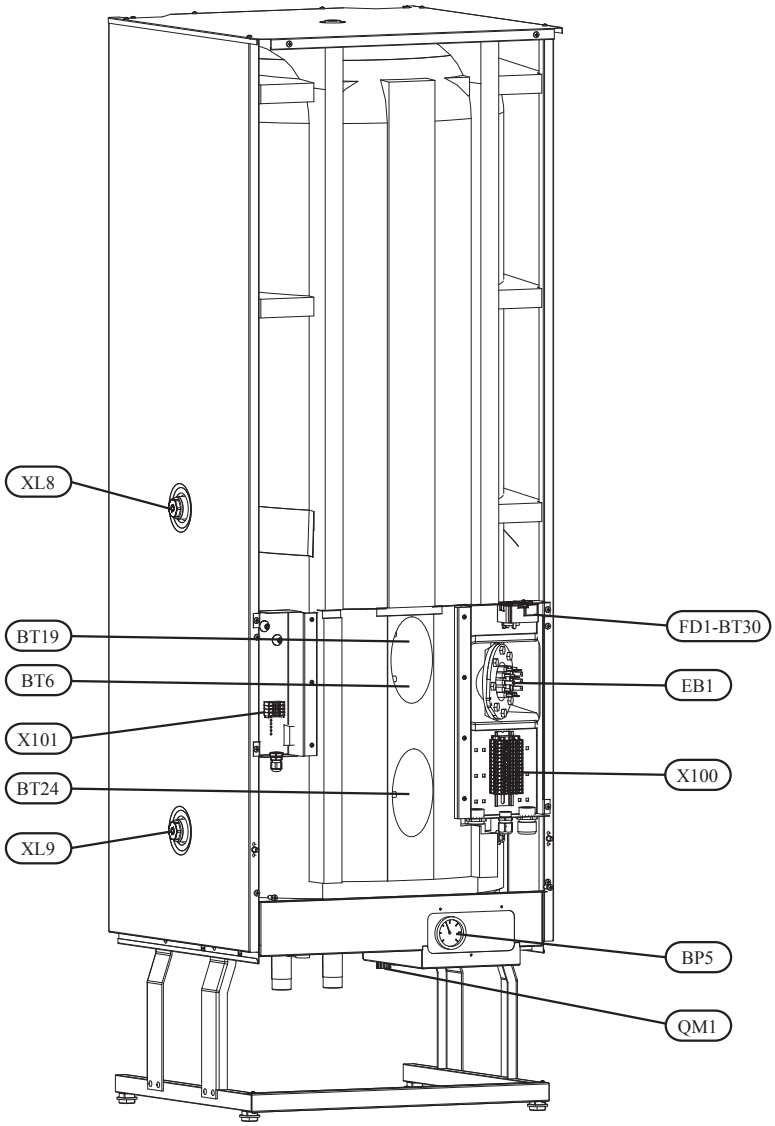

MT500

TBD

List of components

Pipe connections

XL1	Climate system supply
XL2	Climate system return
XL3	Cold water
XL4	Hot water
XL8	Docking in
XL9	Docking out
XL13	Liquid line refrigerant
XL14	Gas line refrigerant
XL15	Connection safety valve, manometer
XL21	Tank circuit supply
XL22	Tank circuit return
XL23	Circalation supply
XL24	Circulation return

Valves etc.

EP2	Heat exchanger	
GP1	Circulation pump, climate system	variable flow
HQ1	Strainer (water)	0.8mm^2
QM1	Valve, draining/filling climate system	
QM20	Venting valve	
QM30	Reversing valve, hot water	2-way 35sec
QM31	Reversing valve, climate system	2-way 35sec
QN11	Mixing valve	3-way ball type 35sec

Electrical components

X1	Terminal block, incoming electric power
X2	Terminal block, outgoing electricity and communication
X3	Terminal block, external addition
X4	Terminal block, outgoing supply to tank
X100	Terminal block, incoming supply from indoor unit
X101	Terminal block, sensor from indoor unit
SF1	Switch
FA1	Miniature circuit breaker, control system
FA2	Miniature circuit breaker, outdoor unit
FA3	Miniature circuit breaker, tank
EB1	Immersion heater
AA4	Display unit
AA6	Relay card
AA21	CPU card
AA22	EBV card
	R24 Setting, fuse size
	R25 Setting, max power, electrical addition
	R26 Setting, max boiler temperature
AA23	Communication board
QA1	Contactor
QA2	Contactor
QA3	Contactor
QA10	Contactor

Sensor, thermostats

BT6	Temperature sensor, tank water
BT19	Temperature sensor, immersion heater
BT24	Temperature sensor, external heat source
BT30	Thermostat, standby mode
FD1	Temperature limiter

Miscellaneous

UB1	Cable gland
UB2	Cable gland
PF1	Rating plate
PF3	Serial number plate
PF4	Sign, pipe connections

Outdoor unit

Component image

FDCW71VNX

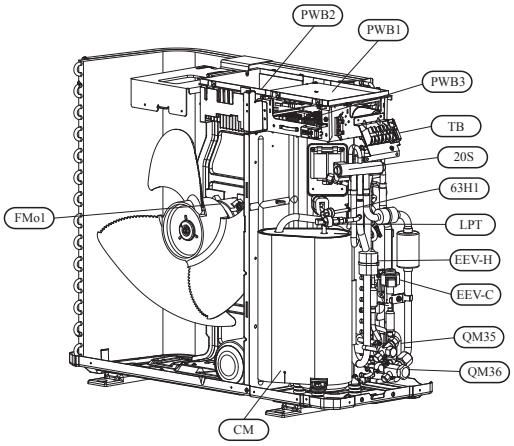

FDCW140VNX

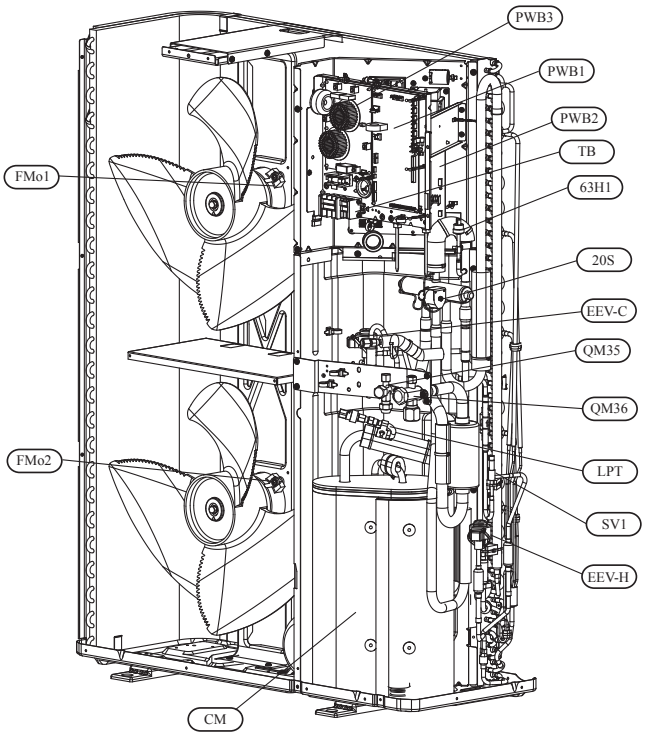

FDCW100VNX

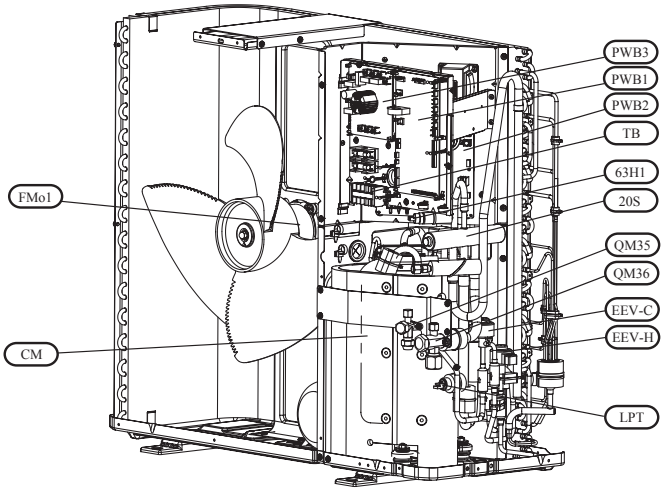

List of components

20S	Solenoid for 4-way valve
63H1	High pressure switch
CM	Compressor motor
EEV-C	Expansion valve, cooling
EEV-H	Expansion valve, heating
FMo1	Fan motor
FMo2	Fan motor
LPT	Low pressure sensor
PWB1	Control PCB
PWB2	Inverter PCB
PWB3	Noise filter PCB
QM35	Service valve, liquid side
QM36	Service valve, gas side
SV1	Valve, solenoid
TB	Terminal block

Accessories

Accessories

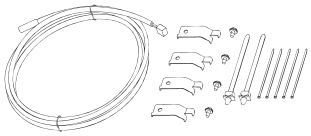

Drain Pan heater

Drain pan heater to outdoor module for operation in colder climates.

Part no. PCZ006A033C

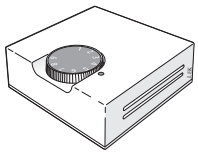

MH-RG 10

Room sensor.

Part no. MCD291A001

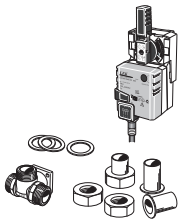

VCC22

Reversing valve, cooling

Part no. MCD291A002

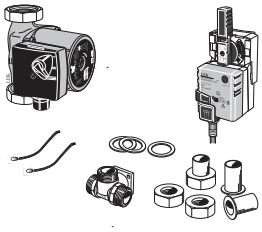

ESV 22

Extra mixing valve group.

Part no. MCD291A003

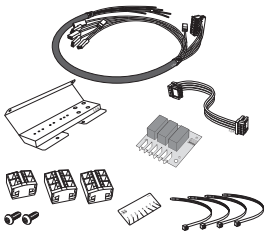

ACK22

Cable kit for ESV 22 or VCC 22.

Part no. MCD291A004

Wind protection (prepared on site)

At the site where the following conditions meet, wind protection for outdoor unit is required to avoid capactity drop or abnormal stop for protection.

- Natural wind directly blows into outdoor unit.
- Relation between wind speed and outdoor air temperature is in the hatched area at the coldest day.

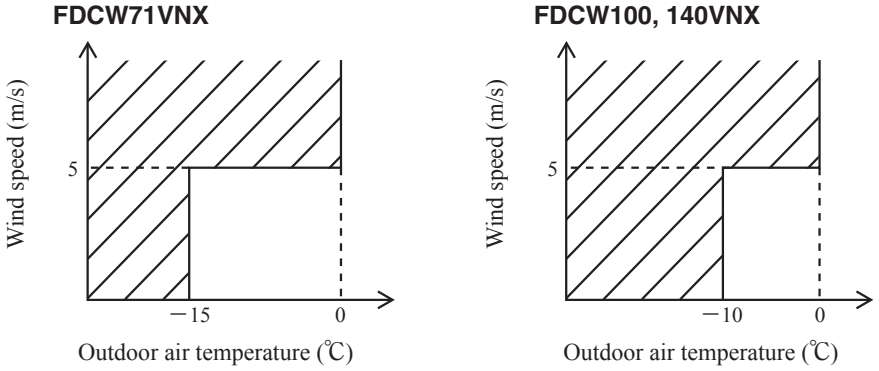

According the wind direction, install appropriate wind guard.

Front wind guard for wind from front.

Side wind guard for wind from left side.

Rear wind guard for wind from rear.

Fasten the components with screws used in the outdoor unit where applicable.

<For FDCW71VNX>

Front wind guard

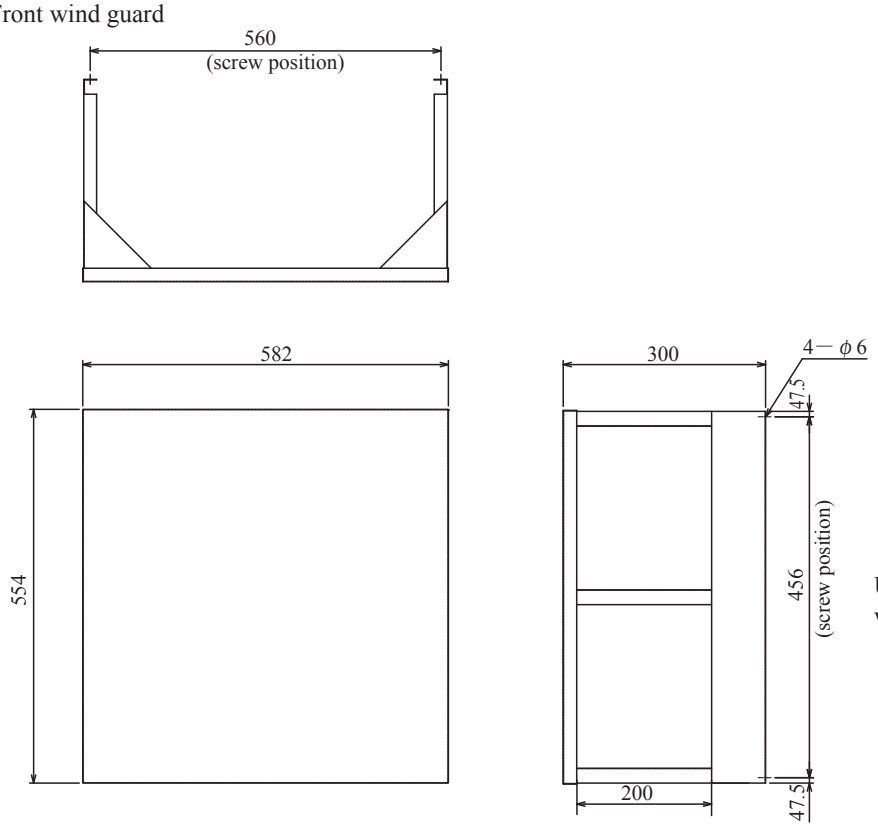

Use M4×10 self-drilling screw to attach it where screw hole is not available.

Rear wind guard

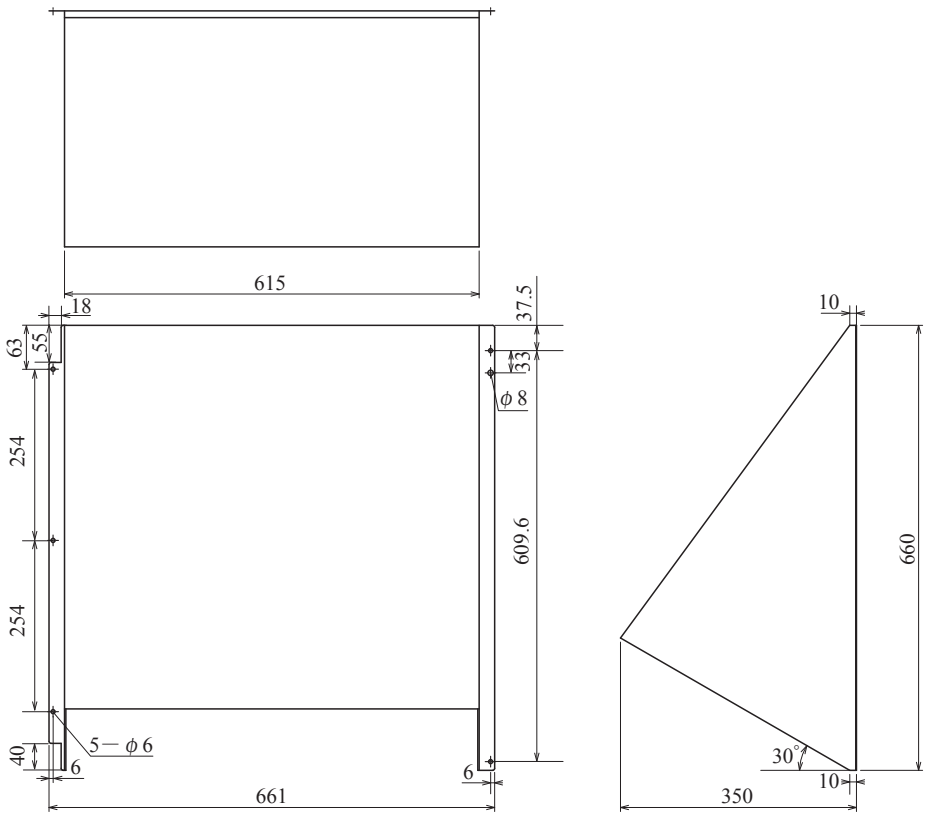

Side wind guard

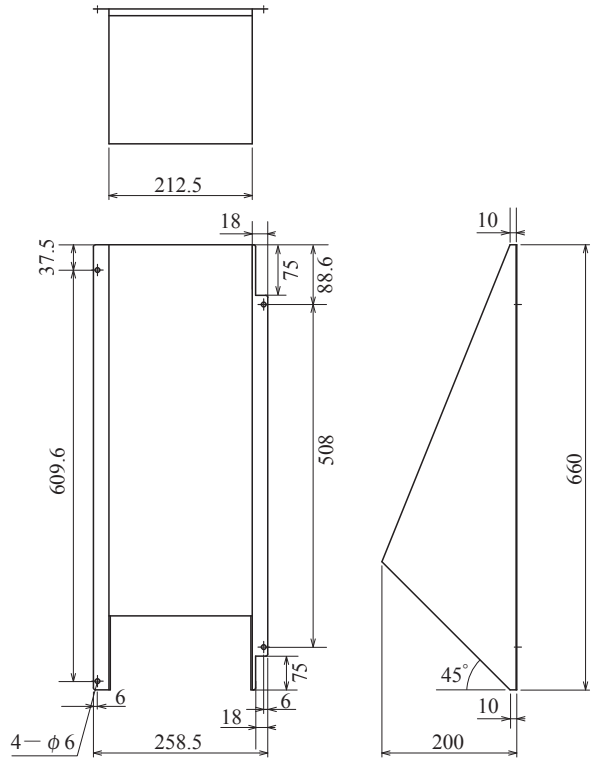

<For FDCW100VNX>

Front wind guard

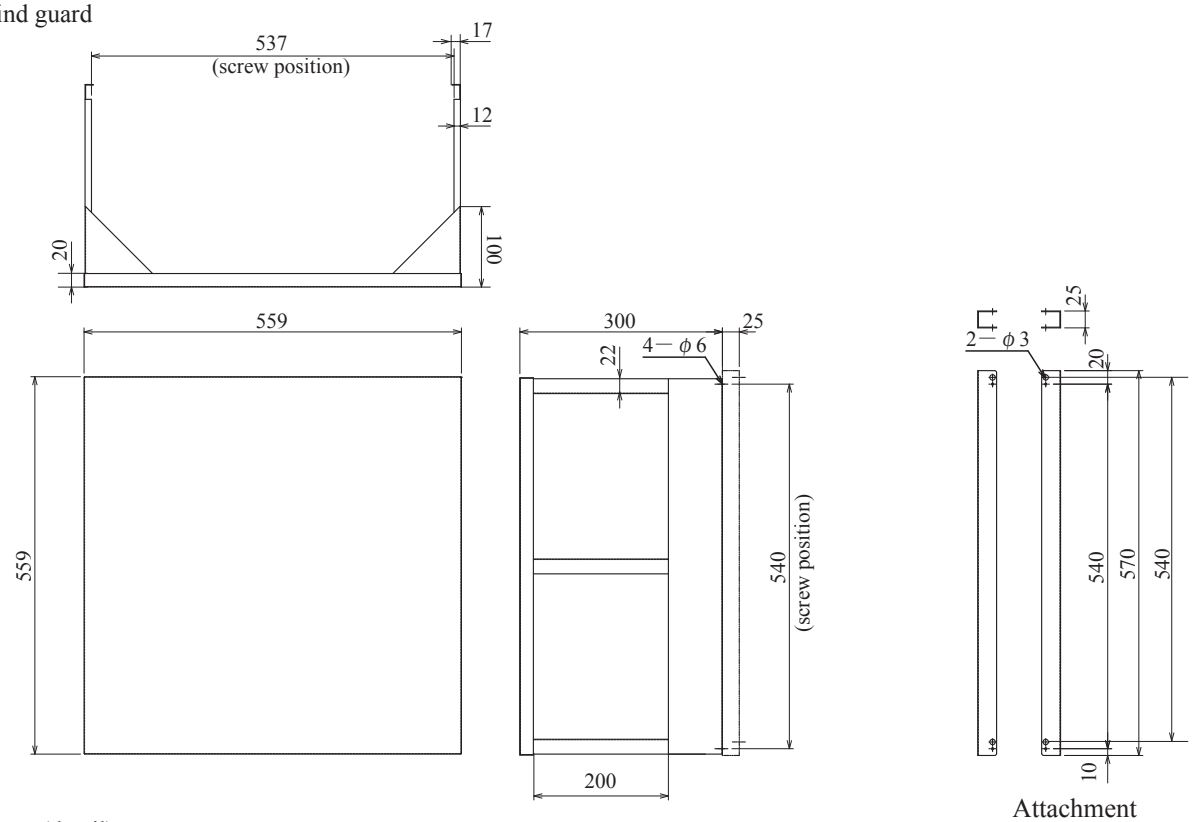

Attachment

Attachment (detail)

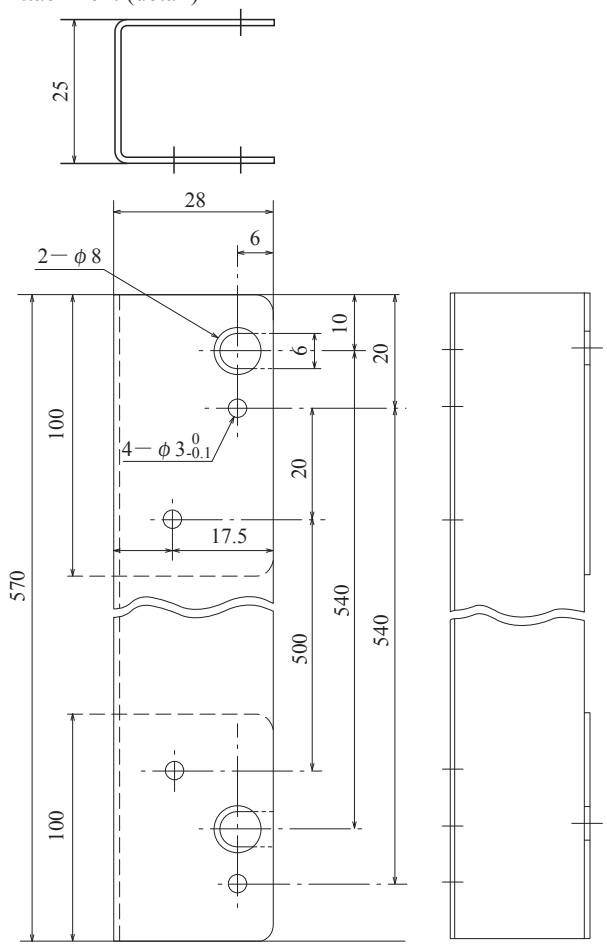

Prepare a pair of symmetrical attachment.

Rear wind guard

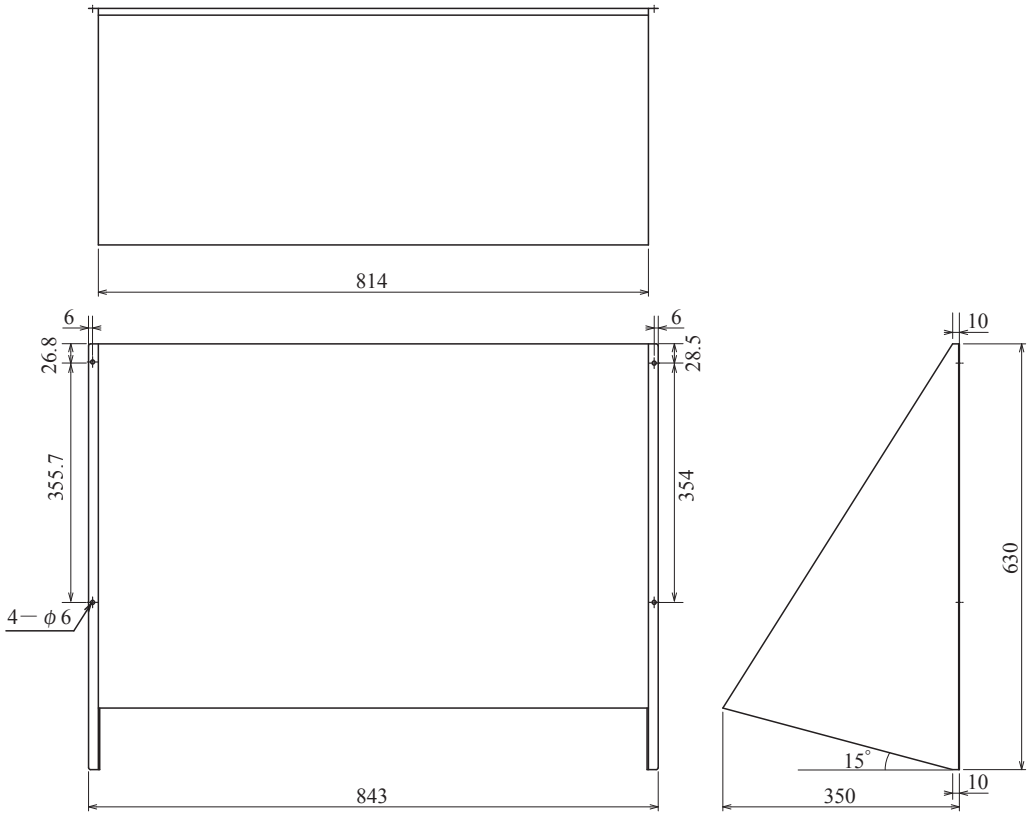

Use M5×13 self-drilling screw to attach it where screw hole is not available.

Side wind guard

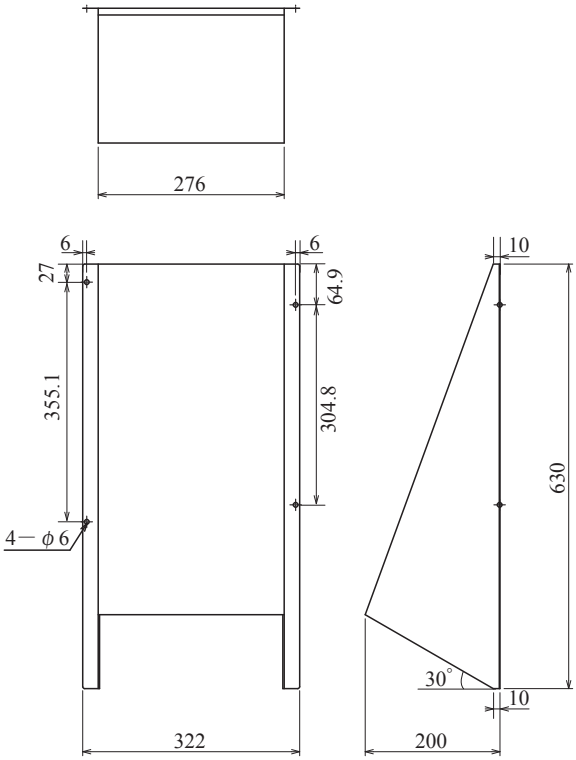

Use M5×13 self-drilling screw to attach it where screw hole is not available.

<For FDCW140VNX>

Front wind guard

Appearance is as same as FDCW100VNX but two pieces are required.

Rear wind guard

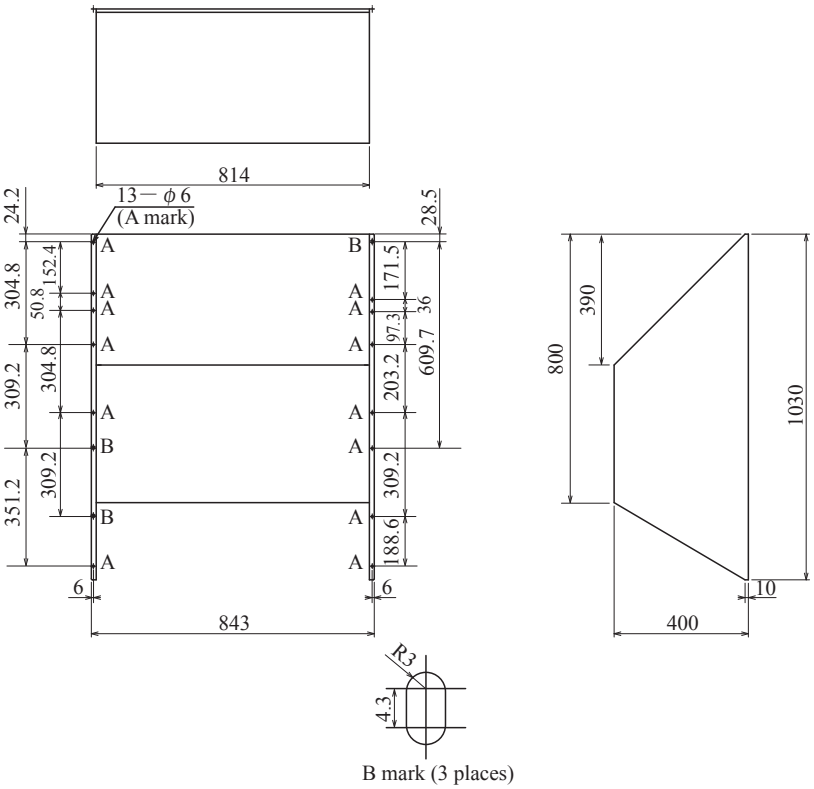

Use M5×13 self-drilling screw to attach it where screw hole is not available.

Side wind guard

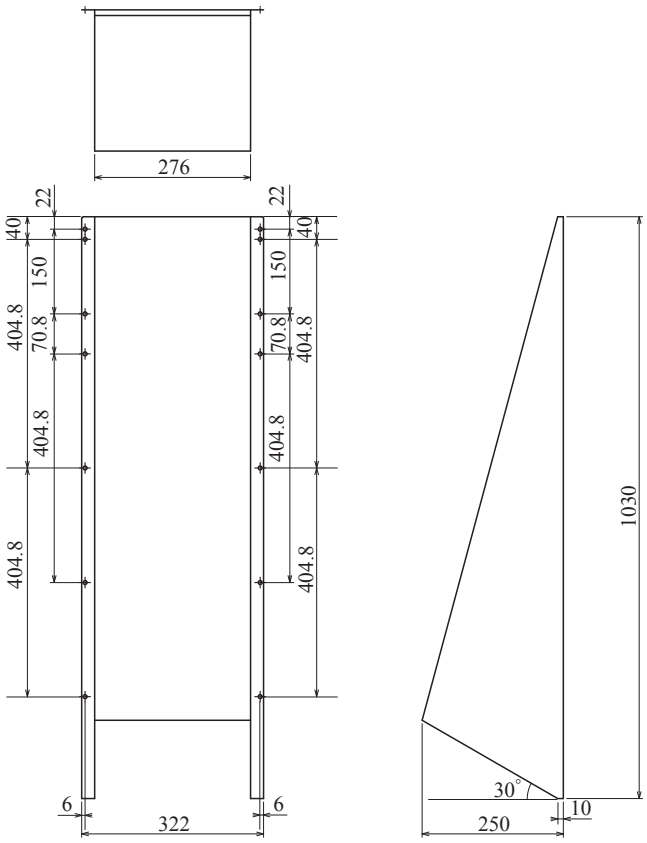

Use M5×13 self-drilling screw to attach it where screw hole is not available.

AIR TO WATER HEAT PUMP

MITSUBISHI HEAVY INDUSTRIES, LTD.

Air-Conditioning & Refrigeration Systems Headquarters
16-5, 2-chome, Kounan, Minato-ku, Tokyo, 108-8215, Japan
Fax : (03) 6716-5926

Because of our policy of continuous improvement, we reserve the right to make changes in all specifications without notice.

© Copyright MITSUBISHI HEAVY INDUSTRIES, LTD.