MHI

Manual No. '08•KX-T-117

TECHNICAL MANUAL

Collection data

INVERTER DRIVEN MULTI-INDOOR UNIT CLIMATE CONTROL SYSTEM

Alternative refrigerant R410A use models

(OUTDOOR UNIT)

KX6 series **(Heat pump type)**

FDC112KXEN6, 140KXEN6, 155KXEN6 (1 phase)
FDC112KXES6, 140KXES6, 155KXES6 (3 phase)

(INDOOR UNIT) –KX6 series–

FDT28KXE6	FDTC22KXE6	FDTW28KXE6	FDTS45KXE6	FDTQ22KXE6	FDU71KXE6
36KXE6	28KXE6	45KXE6	71KXE6	28KXE6	90KXE6
45KXE6	36KXE6	56KXE6		36KXE6	112KXE6
56KXE6	45KXE6	71KXE6			140KXE6
71KXE6	56KXE6	90KXE6			
90KXE6		112KXE6			
112KXE6		140KXE6			
140KXE6					
160KXE6					

FDUM22KXE6	FDQS22KXE6	FDK22KXE6	FDE36KXE6	FDFL28KXE6	FDFU28KXE6
28KXE6	28KXE6	28KXE6	45KXE6	45KXE6	45KXE6
36KXE6	36KXE6	36KXE6	56KXE6	71KXE6	56KXE6
45KXE6	45KXE6	45KXE6	71KXE6		71KXE6
56KXE6	56KXE6	56KXE6	112KXE6		
71KXE6			140KXE6		
90KXE6					
112KXE6					
140KXE6					

MITSUBISHI HEAVY INDUSTRIES, LTD.

PREFACE

KX4-6 series, KXR4-6 series allowed Indoor & Outdoor unit combinations

Combination table

Category	Outdoor unit	Indoor unit										
		Connecgtable remote controller		Same series	Same series	Same series	Mixed series	Mixed series	Mixed series	Same or Mixed serie	Mixed series	Same series
		3-wire type	RC-E1	KXE4 (2004.4-)	KXE4(A) (2004.6-)	KXE4A (2004.11-)	KXE4A (2004.11-)	KXE4A (2004.11-)	KXE4A (2004.11-)			
		3-wire type	RC-E1R				KXE4R (2006.3-) KXE4BR (2007.4-) KXE5R (2007.4-)	KXE4R (2006.3-) KXE4BR (2007.4-) KXE5R (2007.4-)		KXE4R (2006.3-) KXE4BR (2007.4-) KXE5R (2007.4-)	KXE4R (2006.3-) KXE4BR (2007.4-) KXE5R (2007.4-)	
		2-wire type	RC-E1R					KXE6 (2008.3-)	KXE6 (2008.3-)		KXE6 (2008.3-)	KXE6 (2008.3-)
Heat pump (2-pipe) systems	FDCA-HKXE4 5HP	(2004.4-) [Note (4)]		YES [C]	YES [C]	YES [C]	NO	NO	NO	NO	NO	NO
	FDCA-HKXE4 8-48HP	(2004.4-)		NO	YES [C]	YES [C]	NO	NO	NO	NO	NO	NO
	FDCA-HKXE4A 5,6HP FDCA-HKXE4R 5,6HP	(2006.2-) (2006.5-)		NO	YES [C]	YES [C]	YES [C]	NO	NO	YES [C]	NO	NO
	FDCA-HKXE4A 8-48HP FDCA-HKXE4R 8-48HP FDCA-HKXE4BR 8-48HP	(2006.2-) (2006.5-) (2007.4-)		NO	YES [C]	YES [C]	YES [C]	YES [C]	YES [C]	YES [C]	YES [C]	YES [C]
	FDC-HKXEN/S6 4,5,6 HP	(2008.3-)		NO	NO	NO	NO	NO	NO	NO	NO	YES [A]
	FDC-HKXE6 8-12HP	(not yet)		NO	NO	NO	NO	NO	NO	YES [B]	YES [B]	YES [A]
	FDC-HKXE4 14-48HP	(not yet)		NO	NO	NO	NO	NO	NO	YES [B]	YES [B]	YES [A]
Heat recovery (3-pipe) systems [Note(3)]	FDCA-HKXRE4 8-48HP	(2004.11-)		NO	NO	YES [C]	NO	NO	NO	NO	NO	NO
	FDCA-HKXRE4A 8-48HP FDCA-HKXRE4R 8-48HP FDCA-HKXRE4BR 8-48HP	(2006.2-) (2006.6-) (2007.4-)		NO	NO	YES [C]	YES [C]	YES [C]	YES [C]	YES [C]	YES [C]	YES [C]
	FDC-HKXRE6 8-48HP	(not yet)		NO	NO	NO	NO	NO	NO	YES [B]	YES [B]	YES [A]

Note (1) YES: Connectable (See following table in detail), NO: Not connectable

	Outdoor unit	Connected Indoor unit		Dip switch setting of outdoor unit KXE6	Superlink Protocol	Limitation
		Same series	Mixed series			
YES [A]*	KXE6	KXE6		Ⅱ (New)	New (for KX6)	New (for KX6)
YES [B]	KXE6	KXE4 series	KXE6 & KXE4 series	Ⅰ (Previous)	Old (for KX4)	Old (for KX4)
YES [C]	KXE4 series	KXE4 series	KXE4 series		Old (for KX4)	Old (for KX4)

* If Outdoor unit system (YES [A]) is connected to other outdoor unit systems (YES [B] and/or YES [C]) in one superlink system, the dip switch of outdoor unit KXE6 of (YES [A]) should be set from Ⅱ (New) to Ⅰ (Previous).
In this case the superlink protocol and limitation of outdoor unit system (YES [A]) is switched to Old (for KX4).

(2) Combination with new centralised controller and BMS series

		Centralized Controller and BMS series					
		SL1N-E	SL2N-E	SL3N-AE/BE	New WGW	New LGW	New BGW
YES [A]	Connectable I/U	16	64	128 (64×2)	128 (64×2)	128 (64×2)	128 (64×2)
	Superlink protocol	New	New	New	New	New	New
	Connectable network	1	1	1	2	2	2
YES [B] & YES [C]	Connectable I/U	16	48	144 (48×2)	128 (48×2)	98 (48×2)	98 (48×2)
	Superlink protocol	Old	Old	Old	Old	Old	Old
	Connectable I/U	1	1	3	2	2	2
	Applicable Old BMS	SLA1-E	SLA2-E	SLA3-E/B3-E	Old WGW (SC-WGW-A)	Old LGW (SC-LGW-A)	Old BGW (SC-BGW-A)

(3) The compatibility of PFD refrigerant flow branch controller is mentioned in following table.

Connectable PFD controller		Indoor unit	
		KXE4 & KXE5 series	KXE6 series
Outdoor unit	KXE4 SERIES	Old one only PFD-E PFD-ER	New one only (Not yet)
	KXE6 SERIES	Old one only PFD-E PFD-ER	New one only (Not yet)

(4) ( ) Date of launching in the market

CONTENTS

1 GENERAL INFORMATION 1
1.1 Specific features 1
1.2 How to read the model name 2
1.3 Table of models 3
1.4 Table of indoor units panel (Optional) 3
1.5 Outdoor units combination table 3
2 OUTDOOR UNIT 4
2.1 Specifications 4
2.2 Exterior dimensions 6
2.3 Electrical wiring 7
2.4 Noise level 9
3 INDOOR UNIT 10
3.1 Specifications 10
(a) Ceiling cassette-4 way type (FDT) 10
(b) Ceiling cassette-4 way compact type (FDTC) 13
(c) Ceiling cassette-2 way type (FDTW) 15
(d) Ceiling cassette-1 way type (FDTS) 18
(e) Ceiling cassette-1 way compact type (FDTQ) 19
(f) Duct connected-High static pressure type (FDU) 22
(g) Duct connected-Low/Middle static pressure type (FDUM) 24
(h) Duct connected (Ultra thin)-Low static pressure type (FDQS) 28
(i) Wall mounted type (FDK) 30
(j) Ceiling suspended type (FDE) 32
(k) Floor standing (with casing) type (FDFL) 35
(l) Floor standing (without casing) type (FDFU) 36
3.2 Exterior dimensions 37
3.3 Electrical wiring 63
3.4 Exterior appearance 82
3.5 Characteristics of fan 85
3.6 Noise level 92
4 COMMON INFORMATION 98
4.1 Operation chart 98
4.2 Range of usage & limitations 102
4.3 Piping system 104
4.4 Selection chart 105

4.5 Application data 170
(1) Installation of indoor unit 171
(a) Ceiling cassette-4 way type (FDT) 171
(b) Ceiling cassette-4 way compact type (FDTC) 179
(c) Ceiling cassette-2 way type (FDTW) 184
(d) Ceiling cassette-1 way type (FDTS) 189
(e) Ceiling cassette-1 way compact type (FDTQ) 195
(f) Duct connected-High static pressure type (FDU) 203
(g) Duct connected-Low/Middle static pressure type (FDUM) 211
(h) Duct connected (Ultra thin)-Low static pressure type (FDQS) 218
(i) Ceiling suspended type (FDE) 222
(j) Wall mounted type (FDK) 226
(k) Floor standing (with casing) type (FDFL) 231
(l) Floor standing (without casing) type (FDFU) 234
(2) Installation of remote controller (Option parts) 237
(3) Installation of outdoor unit 238
(4) Refrigerant piping 240
(5) Electric wiring work 251
(6) Controller settings 254
(7) Test operation 263
(8) Cautions for servicing (for R410A and compatible machines) 264
(9) Setting function with the remote controller 264
(10) Notabilia as a unit designed for R410A 275
4.6 Outline of operation control by microcomputer 276
(1) Wired remote controller (Optional parts) 276
(2) Operation control function by the indoor controller 277
(3) Operation control function by the remote controller 284
(4) Operation control function by the outdoor controller 285
4.7 System troubleshooting procedure 314
(1) Basics of troubleshooting 314
(2) Explanation of troubleshooting 315
(3) Contents of troubleshooting 316
(4) Replacement of PCB at outdoor unit side 365
5 WIRELESS KIT (Optional parts) 369

1 GENERAL INFORMATION

1.1 Specific features

(1) High Efficiency

(a) Industry leading energy efficiency

• COP across the KX6 range ensures reduced running costs and reduced environmental impact.

• Coefficient of Performance=Cooling Capacity[kw]/Power Consumption[kw]

(b) New Inverter Control (Vector control)

New Inverter Control has applied new advanced technology of Vector control and has realized high efficiency.
• Smooth operation from low speed to high speed
• Smooth Sine Voltage Wave form are attained
• Energy efficiency is futher improved in low speed range

(c) Optimum Refrigerant System Control

We have improved refrigeration circuit from our long experience and have realized following Optimum Refrigerant System Control.
• Optimum heat exchanger refrigerant distribution
• Advanced refrigerant liquid return protection control system
• High speed system control by new Superlink system

(d) DC Fan Motor

Employment of DC fan motor has enabled to realize an excellent efficiency of approximate 60% higher than previous models.

(2) Compact Design

(a) Compact high efficiency Heat Exchanger

• Optimizing relationship of the air flow velocity & fin pattern
• Improvement of air distribution Maximizing efficiency of heat exchanger

(b) Compact Integrated PCB

• Control Box size reduction
• PCB size reduced by 50%
Control PCB: Single-sided board ➡ Double-sided board
Inverter PCB: Power transistor size reduction
• New Superlink system control
• New Design method applid

(3) Design Flexibility

(a) Increased indoor unit connection capacity

KX6 Ultra Compact series can connect indoor unit capacity up to 150% from 130% of previous models.
• Capacity from 80% to 150% is possible

Model \ Item	Number of connectable	Connectable capacity
FDC112KXEN6	1 to 6 units	90 ~ 168
FDC112KXES6		
FDC140KXEN6	1 to 8 units	112 ~ 210
FDC140KXES6		
FDC160KXEN6		124 ~ 233
FDC160KXES6		

(4) Serviceability

(a) Monitoring function

KX6 Ultra Compact series includes new feature to assist with servicing and trouble shooting. Various data can be monitored through 3-degit display on the outdoor unit PCB.

(b) New remote control for all indoor units

Applying nonpolar 2-core in new remote control line, it is very convenient for installation including renewal case.

(c) Max length of electrical wiring

The wiring must be a 2-core shielded cable size 0.75mm^2 to 1.25mm^2.
The max length of 2-core can be 1500m from 1000m of previous models.

1.2 How to read the model name

(1) Outdoor unit

Example: FDC 140 KX EN 6

- 6 — Series No.
- EN — Application power source...See the specifications
- KX — Multi KX
- 140 — Nominal capacity (nominal cooling capacity : 14.0kW)
- FDC — Model name (Outdoor unit)

(2) Indoor unit

Example: FDT 28 KX E 6

- 6 — Series No.
- E — Application power source...See the specifications
- KX — Multi series
- 28 — Nominal capacity (nominal cooling capacity : 2.8 kW)
- FDT — Model name (Indoor unit : FDTC, FDT, FDTW, FDTQ, FDTS, FDU, FDUM, FDQS, FDE, FDK, FDFL, FDFU)

Note

For outdoor unit, EN60552-2 and EN60555-3 are not applicable as consent by the utility company or notification to the utility company is given before usage.

1.3 Table of models

Model \ Capacity	22	28	36	45	56	71	90	112	140	160
Ceiling cassette-4 way type (FDT)		○	○	○	○	○	○	○	○	○
Ceiling cassette-4 way compact type (FDTC)	○	○	○	○	○					
Ceiling cassette-2 way type (FDTW)		○		○	○	○	○	○	○	
Ceiling cassette-1 way type (FDTS)				○		○				
Ceiling cassette-1 way compact type (FDTQ)	○	○	○							
Duct connected-High static pressure type (FDU)						○	○	○	○	
Duct connected-Low/Middle static pressure type (FDUM)	○	○	○	○	○	○	○	○	○	
Duct connected (Ultra thin)-Low static pressure type (FDQS)	○	○	○	○	○					
Wall mounted type (FDK)	○	○	○	○	○	○				
Ceiling suspended type (FDE)			○	○	○	○		○	○	
Floor standing (with casing) type (FDFL)		○		○		○				
Floor standing (without casing) type (FDFU)		○		○	○	○				
Outdoor units to be combined FDC	FDC112KXEN6, 140KXEN6, 155KXEN6 FDC112KXES6, 140KXES6, 155KXES6									

1.4 Table of indoor units panel (Optional)

Model		Parts Model
FDTC	Capacity:22,28,36,45,56	TC-PSA-24W-ER
FDT	Capacity:28,36,45,56,71, 90,112,140,160	T-PSA-36W-E
FDTW	Capacity:28,45,56	TW-PSA-24W-E
	Capacity:71,90	TW-PSA-34W-E
	Capacity:112,140	TW-PSA-44W-E
FDTQ (Direct blow panel)	Capacity:22,28,36	TQ-PSA-15W-E
		TQ-PSB-15W-E
FDTQ (Duct panel)	Capacity:22,28,36	QR-PNA-14W-ER
		QR-PNB-14W-ER
FDTS	Capacity:45	TS-PSA-29W-E
	Capacity:71	TS-PSA-39W-E

1.5 Outdoor units combination table

(a) Branch pipe set (Optional)

Total capacity downstream	Branching pipe set
Less than 180	DIS-22-1
180 or more but less than 371	DIS-180-1

(b) Header pipe set (Optional)

Total capacity downstream	Header set model type	Number of branches
Less than 180	HEAD4-22-1	4 branches at the most
180 or more but less than 371	HEAD6-180-1	6 branches at the most

2 OUTDOOR UNIT

2.1 Specifications

Models FDC112KXEN6, 140KXEN6, 155KXEN6

(50/60 Hz)

Item \ Model		FDC112KXEN6	FDC140KXEN6	FDC155KXEN6
Power source		**1 Phase 220-240V 50Hz/220V 60Hz**		
Nominal cooling capacity(1)	**kW**	**11.2**	**14.0**	**15.5**
Nominal heating capacity(1)	**kW**	**12.5**	**16.0**	**16.3**
Noise level	dB(A)	52/54	53/55	53/56
Exterior dimensions Height × Width × Depth	**mm**	**845 × 970 × 370**		
Net weight	**kg**	**82**		
Exterior appearance (color)		Stucco white		
Refrigerant equipment compressor type & Q' ty		RMT5126MDE21 × 1		
Motor	kW	1.9	2.9	3.2
Starting method		Direct line starting		
Capacity control	%	29 ~ 113	22 ~ 110	21 ~ 101
Crankcase heater	**W**	**20**		
Heat exchanger		Straight fin & inner grooved tubing		
Refrigerant control		Electronic expansion Valve		
Refrigerant		**R410A**		
Quantity	**kg**	**5.0**		
Refrigerant oil	ℓ	**1.0 (M-MA32R)**		
Defrost control		Microcomputer controlled De-Icer		
Air handling equipment Fan type & Q'ty		Propeller fan × 1		
Motor	**W**	**86 ×1**		
Starting method		Direct line start		
Air flow(Standard)	**CMM**	**75/75**	**75/82**	
Shock & vibration absorber		Rubber mount (for compressor)		
Safety equipment		Compressor overheat protection, overcurrent protection, power transistor overheating protection, abnormal high pressure protection		
Installation data Refrigerant piping size	**mm(in)**	**Liquid line: ϕ9.52(3/8") Gas line: ϕ15.88(5/8")**		
Connecting method		**Flare piping**		
Drain		Hole for drain(ϕ20 × 3pcs)		
Insulation for piping		Necessary (both Liquid & Gas lines)		
Indoor units to be combined		**FDT28, 36, 45, 56, 71, 90, 112, 140, 160KXE6 FDTC22, 28, 36, 45, 56KXE6 FDTW28, 45, 56, 71, 90, 112, 140KXE6 FDTS45, 71KXE6 FDQS22, 28, 36, 45, 56KXE6 FDTQ22, 28, 36KXE6 FDU71, 90, 112, 140KXE6 FDUM22, 28, 36, 45, 56, 71, 90, 112, 140KXE6 FDE36, 45, 56, 71, 112, 140KXE6 FDK22, 28, 36, 45, 56, 71KXE6 FDFL28, 45, 71KXE6 FDFU28, 45, 56, 71KXE6**		

Note (1) The cooling and heating capabilities imply the values when the indoor unit of rated capacity is connected under the condition specified in ISO-T1.

List of branch pipe part numbers (Select parts in accordance with the branching system used.)

Corresponding outdoor unit	Number of indoor units that can be connected	Branching system	
		Branch pipe system	Header system
FDC112KXEN6	1~6 units	DIS-22-1	HEAD4-22-1
FDC140KXEN6	1~8 units		
FDC155KXEN6	1~8 units		

Models FDC112KXES6, 140KXES6, 155KXES6

(50/60 Hz)

Item / Model		FDC112KXES6	FDC140KXES6	FDC155KXES6
Power source		**3 Phase 380-415V 50Hz/380V 60Hz**		
Nominal cooling capacity(1)	**kW**	**11.2**	**14.0**	**15.5**
Nominal heating capacity(1)	**kW**	**12.5**	**16.0**	**16.3**
Noise level	dB(A)	52/54	53/55	53/56
Exterior dimensions Height × Width × Depth	**mm**	**845 × 970 × 370**		
Net weight	**kg**	**82**		
Exterior appearance (color)		Stucco white		
Refrigerant equipment compressor type & Q' ty		RMT5126MDE31 × 1		
Motor	kW	1.9	2.9	3.2
Starting method		Direct line starting		
Capacity control	%	29 ~ 113	22 ~ 112	21 ~ 109
Crankcase heater	**W**	**20**		
Heat exchanger		Straight fin & inner grooved tubing		
Refrigerant control		Electronic expansion Valve		
Refrigerant		**R410A**		
Quantity	**kg**	**5.0**		
Refrigerant oil	ℓ	**1.0 (M-MA32R)**		
Defrost control		Microcomputer controlled De-Icer		
Air handling equipment Fan type & Q'ty		Propeller fan × 1		
Motor	**W**	**86 ×1**		
Starting method		Direct line start		
Air flow(Standard)	**CMM**	**75/75**	**75/82**	
Shock & vibration absorber		Rubber mount (for compressor)		
Safety equipment		Compressor overheat protection, overcurrent protection, power transistor overheating protection, abnormal high pressure protection		
Installation data Refrigerant piping size	**mm(in)**	**Liquid line: ϕ9.52(3/8") Gas line: ϕ15.88(5/8")**		
Connecting method		**Flare piping**		
Drain		Hole for drain(ϕ20 × 3pcs)		
Insulation for piping		Necessary (both Liquid & Gas lines)		
Indoor units to be combined		**FDT28, 36, 45, 56, 71, 90, 112, 140, 160KXE6 FDTC22, 28, 36, 45, 56KXE6 FDTW28, 45, 56, 71, 90, 112, 140KXE6 FDTS45, 71KXE6 FDQS22, 28, 36, 45, 56KXE6 FDTQ22, 28, 36KXE6 FDU71, 90, 112, 140KXE6 FDUM22, 28, 36, 45, 56, 71, 90, 112, 140KXE6 FDE36, 45, 56, 71, 112, 140KXE6 FDK22, 28, 36, 45, 56, 71KXE6 FDFL28, 45, 71KXE6 FDFU28, 45, 56, 71KXE6**		

Note (1) The cooling and heating capabilities imply the values when the indoor unit of rated capacity is connected under the condition specified in ISO-T1.

List of branch pipe part numbers (Select parts in accordance with the branching system used.)

Corresponding outdoor unit	Number of indoor units that can be connected	Branching system	
		Branch pipe system	Header system
FDC112KXES6	1~6 units	DIS-22-1	HEAD4-22-1
FDC140KXES6	1~8 units		
FDC155KXES6	1~8 units		

2.2 Exterior dimensions

Models All models

Unit: mm

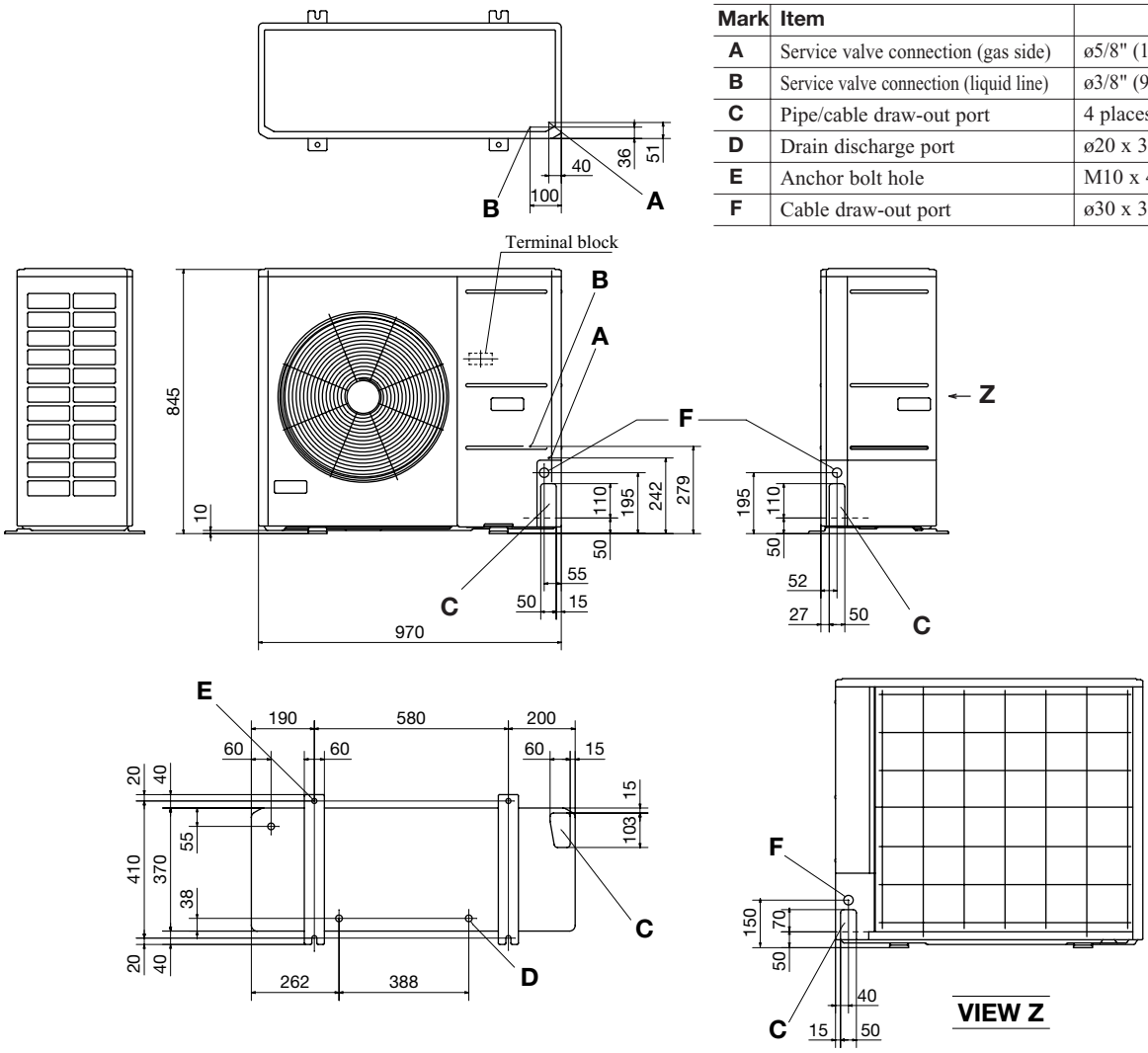

Mark	Item	
A	Service valve connection (gas side)	ø5/8" (15.88) (flare)
B	Service valve connection (liquid line)	ø3/8" (9.52) (flare)
C	Pipe/cable draw-out port	4 places
D	Drain discharge port	ø20 x 3 places
E	Anchor bolt hole	M10 x 4 places
F	Cable draw-out port	ø30 x 3 places

Required space for maintenance and air flow

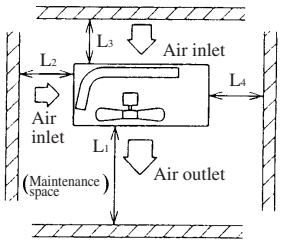

Minimum allowable space to the obstacles

Unit:mm

Mark \ Installation type	I	II	III
L_1	Open	Open	500
L_2	300	5	Open
L_3	150	300	150
L_4	5	5	5

Notes:
(1) It must not be surrounded by walls on the four sides.
(2) The unit must be fixed with anchor bolts. An anchor bolt must not protrude more than 15mm.
(3) Where the unit is subject to strong winds, lay it in such a direction that the blower outlet faces perpendicularly to the dominant wind direction.
(4) Leave a 1m or larger space above the unit.
(5) A wall in front of the blower outlet must not exceed the units height.
(6) The unit name plate is attached on the lower right corner of the front panel.

2.3 Electrical wiring

Models FDC112KXEN6, 140KXEN6, 155KXEN6

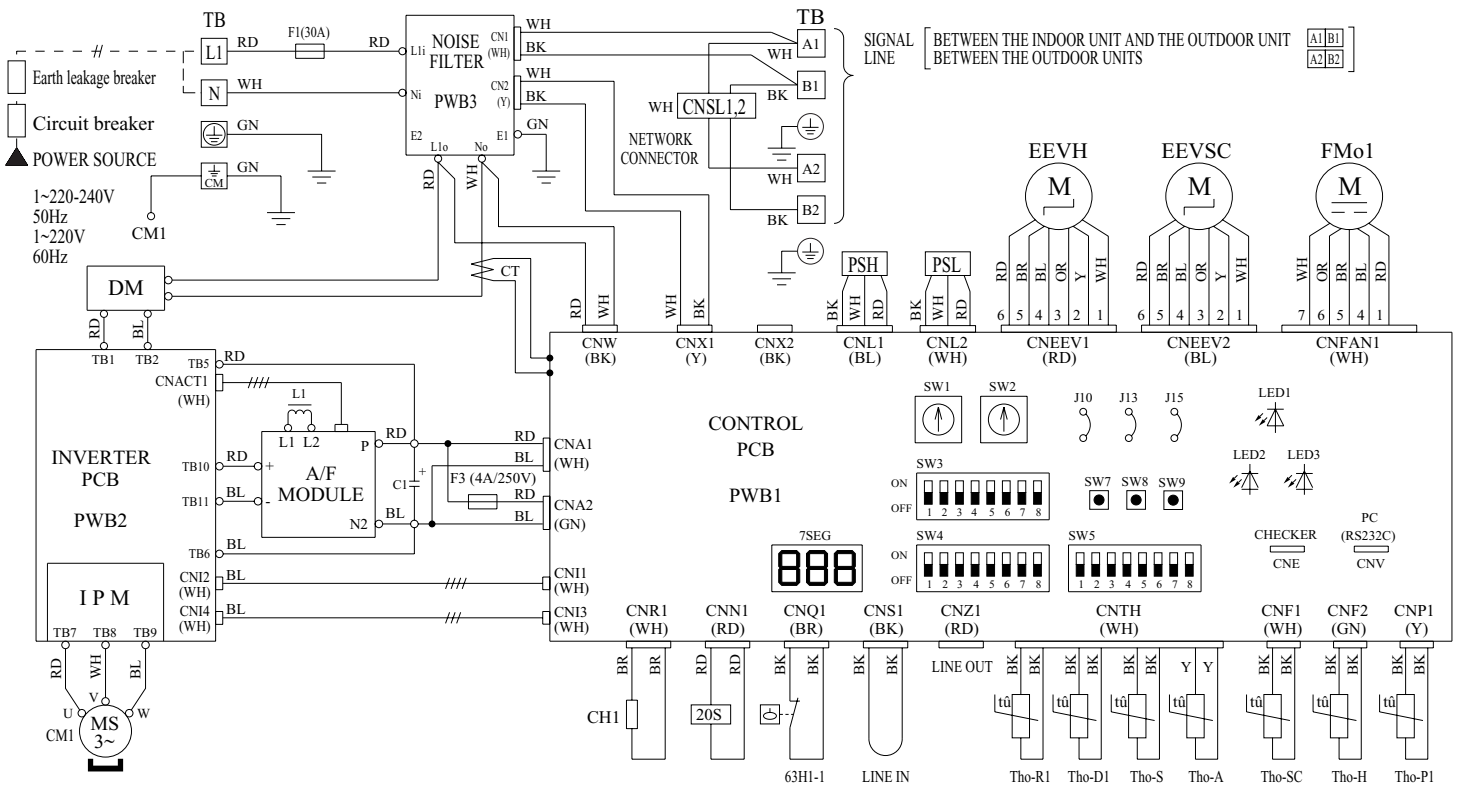

Meaning of marks

Mark	Name	Mark	Name
C	Electrolytic capacitor	SW3-1	Inspection LED reset
CH	Crankcase heater	SW3-5	Check operation start
CM	Compressor motor	SW3-7	Forced cooling/heating switching
CNA~Z	Connector	SW4-7	Demand switching
CT	Current sensor	SW4-8	Demand switching
DM	Diode module	SW5-1	Test run start (normal/start)
EEVSC	Electronic expansion valve (For overcooling)	SW5-2	Test run cooling setting (heating/cooling)
EEVH	Electronic expansion valve (For heating)	SW5-3	Pump down (normal/valid)
FMo1	Fan motor	SW5-5	Superlink protocol setting (new/previous)
F	Fuse	SW7 (Button)	Data erasing/writing
PSH	High pressure sensor	SW8 (Button)	7-seg display UP, one's place number
IPM	Intelligent power module	SW9 (Button)	7-seg display UP, ten's place number
J10	Superlink terminal setting (spare/normal)	TB	Terminal board
J13	External input switch (pulse/level)	Tho-A	Thermistor (outdoor air temperature)
J15	Defrost start temperature (cold weather district/normal)	Tho-D	Thermistor (discharge pipe)
L	Reactor	Tho-P1	Thermistor (power transistor)
LED1	Indicator lamp (Red-Inspection indicator)	Tho-R1	Thermistor (heat exchanger)
LED2	Indicator lamp (Green-Microcomputer normality indication)	Tho-S	Thermistor (suction pipe)
LED3	Indicator lamp (Green-For service)	Tho-SC	Thermistor (sub-cooling coil, liquid)
PSL	Low pressure sensor	Tho-H	Thermistor (sub-cooling coil, gas)
SW1	Outdoor unit No. (ten's place number)	20S	4-way valve coil
SW2	Outdoor unit No. (one's place number)	63H1-1	High pressure switch (Protection)

Compressor terminal arrangement

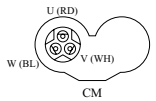

Color mark

Mark	Color
BR	Brown
RD	Red
WH	White
BL	Blue
BK	Black
OR	Orange
Y	Yellow
Y/GN	Yellow/Green

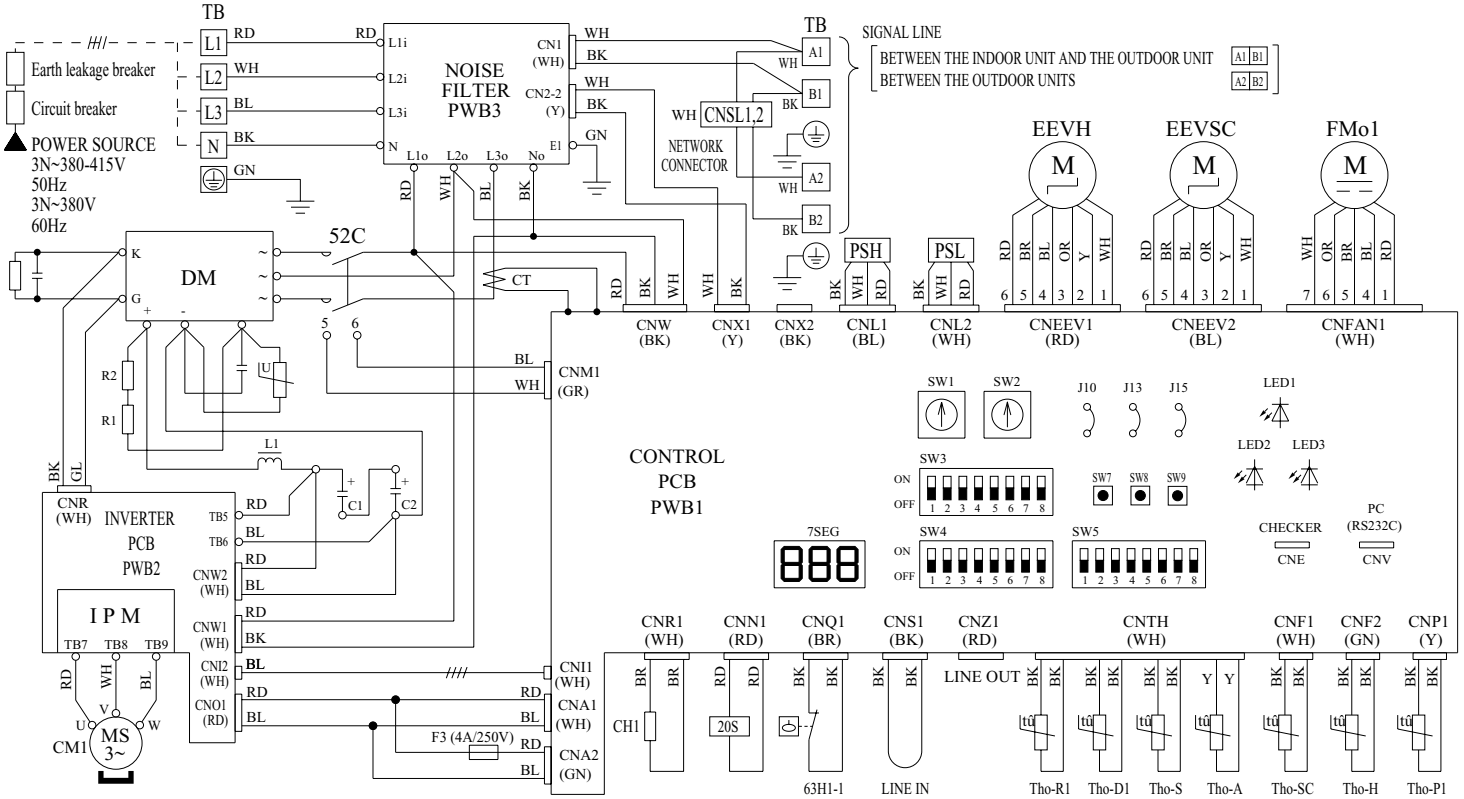

Meaning of marks

Mark	Name	Mark	Name
C	Electrolytic capacitor	SW3-1	Inspection LED reset
CH	Crankcase heater	SW3-5	Check operation start
CM	Compressor motor	SW3-7	Forced cooling/heating switching
CNA~Z	Connector	SW4-7	Demand switching
CT	Current sensor	SW4-8	Demand switching
DM	Diode module	SW5-1	Test run start (normal/start)
EEVSC	Electronic expansion valve (For overcooling)	SW5-2	Test run cooling setting (heating/cooling)
EEVH	Electronic expansion valve (For heating)	SW5-3	Pump down (normal/valid)
FMo1	Fan motor	SW5-5	Superlink protocol setting (new/previous)
F	Fuse	SW7 (Button)	Data erasing/writing
PSH	High pressure sensor	SW8 (Button)	7-seg display UP, one's place number
IPM	Intelligent power module	SW9 (Button)	7-seg display UP, ten's place number
J10	Superlink terminal setting (spare/normal)	TB	Terminal board
J13	External input switch (pulse/level)	Tho-A	Thermistor (outdoor air temperature)
J15	Defrost start temperature (cold weather district/normal)	Tho-D	Thermistor (discharge pipe)
L	Reactor	Tho-P1	Thermistor (power transistor)
LED1	Indicator lamp (Red-Inspection indicator)	Tho-R1	Thermistor (heat exchanger)
LED2	Indicator lamp (Green-Microcomputer normality indication)	Tho-S	Thermistor (suction pipe)
LED3	Indicator lamp (Green-For service)	Tho-SC	Thermistor (sub-cooling coil, liquid)
PSL	Low pressure sensor	Tho-H	Thermistor (sub-cooling coil, gas)
SW1	Outdoor unit No. (ten's place number)	20S	4-way valve coil
SW2	Outdoor unit No. (one's place number)	63H1-1	High pressure switch (Protection)

Compressor terminal arrangement

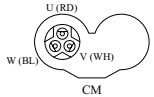

Color mark

Mark	Color
BR	Brown
RD	Red
WH	White
BL	Blue
BK	Black
OR	Orange
Y	Yellow
Y/GN	Yellow/Green

2.4 Noise level

Measured based on JIS B 8616

Mike position as highest noise level in position as below

Distance from front side 1m

Height 1m

Models FDC112KXEN6
112KXES6

Noise level 52 dB (A) at 50Hz

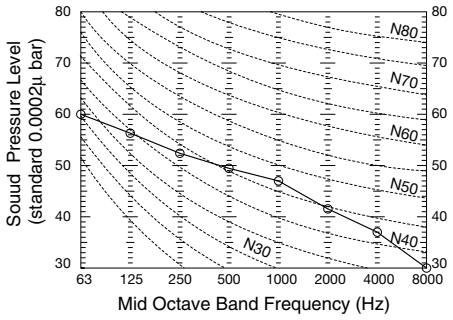

Noise level 54 dB (A) at 60Hz

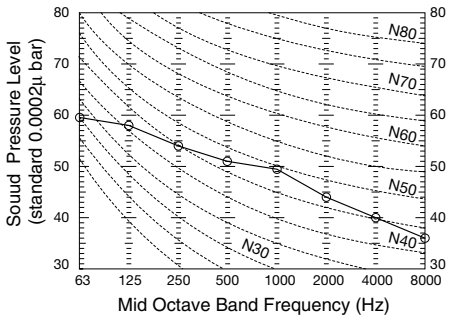

Models FDC140KXEN6
140KXES6

Noise level 53 dB (A) at 50Hz

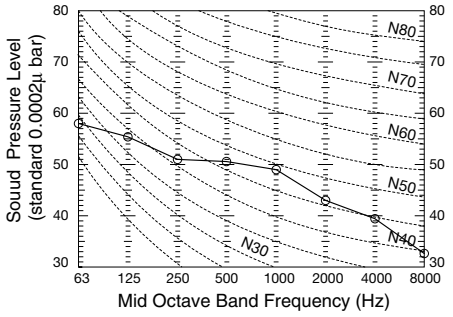

Noise level 55 dB (A) at 60Hz

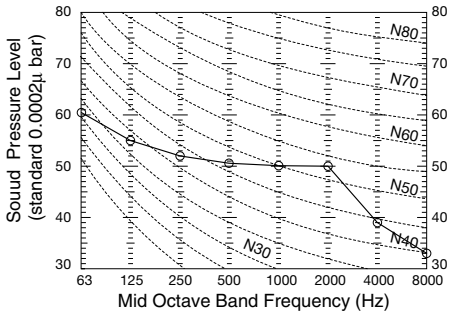

Models FDC155KXEN6
155KXES6

Noise level 53 dB (A) at 50Hz

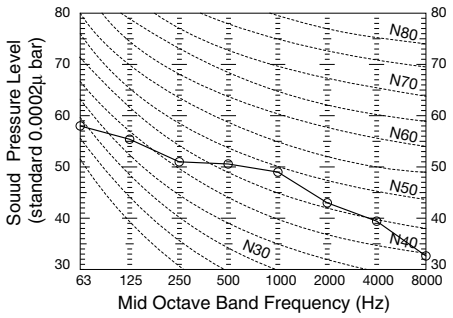

Noise level 56 dB (A) at 60Hz

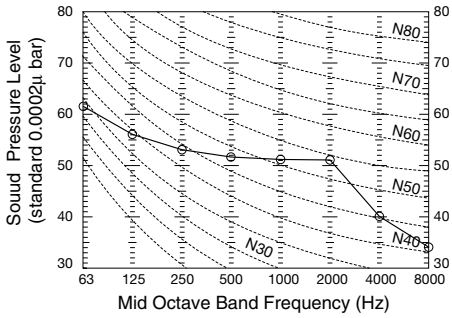

3 INDOOR UNIT

3.1 Specifications

(a) Ceiling cassette-4 way type (FDT)

Models FDT28KXE6, 36KXE6

Item \ Models		FDT28KXE6	FDT36KXE6
Nominal cooling capacity*1	**kW**	**2.8**	**3.6**
Nominal heating capacity*2	**kW**	**3.2**	**4.0**
Power source		**1 Phase 220-240V 50Hz/220V 60Hz**	
Noise level	dB(A)	Hi: 35 Me: 33 Lo: 31	
Exterior dimensions Height × Width × Depth	**mm**	**Unit:246 × 840 × 840 Panel:35 × 950 × 950**	
Net weight	**kg**	**Unit:22 Panel:5.5**	
Refrigerant equipment Heat exchanger		Louver fin & inner grooved tubing	
Refrigerant control		Electronic Expansion Valve	
Air handling equipment Fan type & Q'ty		Turbo fan × 1	
Motor	**W**	**50×1**	
Starting method		Direct line starting	
Air flow(Standard)	**CMM**	**Hi: 18 Me: 16 Lo: 14**	
Outside air intake		Possible	
Air filter, Q'ty		Pocket plastic net × 1(Washable)	
Shock & vibration isolator		Rubber sleeve(for fan motor)	
Insulation (noise & heat)		Polyurethane foam	
Operation control Operation switch		**Wired remote control switch (Optional:RC-E3)** **Wireless remote control switch (Optional:RCN-T-36W-E)**	
Room temperature control		Thermostat by electronics	
Safety equipment		Internal thermostat for fan motor. Frost protection thermostat	
Installation data Refrigerant piping size	**mm(in)**	**Liquid line:ϕ6.35(1/4")** **Gas line:ϕ9.52(3/8")**	**Liquid line:ϕ6.35(1/4")** **Gas line:ϕ12.7(1/2")**
Connecting method		**Flare piping**	
Drain pump		Built-in Drain pump	
Drain hose		Connectable with VP20(I.D.20mm, O.D.26mm)	
Insulation for piping		Necessary (both Liquid & Gas line)	
Accessories		**Mounting kit, Drain hose**	
Optional parts		**Decorative Panel**	

Notes (1) The data are measured at the following conditions.

Item / Operation	Indoor air temperature		Outdoor air temperature		Standards
	DB	WB	DB	WB	
Cooling*1	27℃	19℃	35℃	24℃	ISO-T1
Heating*2	20℃	—	7℃	6℃	

(2) This packaged air-conditioner is manufactured and tested in conformity with the following standard.
ISO-T1 "UNITARY AIR-CONDITIONERS"

●Decorative Panel model (Optional)

Model \ Item	Panel Part No.
FDT28,36 type	T-PSA-36W-E

Models FDT45KXE6, 56KXE6, 71KXE6

Item \ Models		FDT45KXE6	FDT56KXE6	FDT71KXE6
Nominal cooling capacity*1	**kW**	**4.5**	**5.6**	**7.1**
Nominal heating capacity*2	**kW**	**5.0**	**6.3**	**8.0**
Power source		**1 Phase 220-240V 50Hz/220V 60Hz**		
Noise level	dB(A)	Hi: 35 Me: 33 Lo: 31	Hi: 35 Me: 33 Lo: 31	Hi: 35 Me: 33 Lo: 31
Exterior dimensions Height × Width × Depth	**mm**	**Unit:246 × 840 × 840 Panel:35 × 950 × 950**		
Net weight	**kg**	**Unit:22 Panel:5.5**	**Unit:24 Panel:5.5**	
Refrigerant equipment Heat exchanger		Louver fin & inner grooved tubing		
Refrigerant control		Electronic Expansion Valve		
Air handling equipment Fan type & Q'ty		Turbo fan × 1		
Motor	**W**	**50×1**		
Starting method		Direct line starting		
Air flow(Standard)	**CMM**	**Hi: 18 Me: 16 Lo: 14**		
Outside air intake		Possible		
Air filter, Q'ty		Pocket plastic net × 1(Washable)		
Shock & vibration isolator		Rubber sleeve(for fan motor)		
Insulation (noise & heat)		Polyurethane foam		
Operation control Operation switch		**Wired remote control switch (Optional:RC-E3)** **Wireless remote control switch (Optional:RCN-T-36W-E)**		
Room temperature control		Thermostat by electronics		
Safety equipment		Internal thermostat for fan motor. Frost protection thermostat		
Installation data Refrigerant piping size	**mm(in)**	**Liquid line: ϕ6.35(1/4")** **Gas line: ϕ12.7(1/2")**		**Liquid line: ϕ9.52(3/8")** **Gas line: ϕ15.88(5/8")**
Connecting method		**Flare piping**		
Drain pump		Built-in Drain pump		
Drain hose		Connectable with VP20(I.D.20mm, O.D.26mm)		
Insulation for piping		Necessary (both Liquid & Gas lines)		
Accessories		**Mounting kit, Drain hose**		
Optional parts		**Decorative Panel**		

Notes (1) The data are measured at the following conditions.

Item / Operation	Indoor air temperature		Outdoor air temperature		Standards
	DB	WB	DB	WB	
Cooling*1	27℃	19℃	35℃	24℃	ISO-T1
Heating*2	20℃	—	7℃	6℃	

(2) This packaged air-conditioner is manufactured and tested in conformity with the following standard.
ISO-T1 "UNITARY AIR-CONDITIONERS"

●Decorative Panel model (Optional)

Item / Model	Panel Part No.
FDT45,56,71 type	T-PSA-36W-E

Models FDT90KXE6, 112KXE6, 140KXE6, 160KXE6

Item \ Models		FDT90KXE6	FDT112KXE6	FDT140KXE6	FDT160KXE
Nominal cooling capacity*1	**kW**	**9.0**	**11.2**	**14.0**	**16.0**
Nominal heating capacity*2	**kW**	**10.0**	**12.5**	**16.0**	**18.0**
Power source		**1 Phase 220-240V 50Hz/220V 60Hz**			
Noise level	dB(A)	Hi: 42 Me: 39 Lo: 36		Hi: 45 Me: 43 Lo: 40	Hi: 45 Me: 43 Lo: 41
Exterior dimensions Height × Width × Depth	**mm**	**Unit: 298 × 840 × 840 Panel:35 × 950 × 950**			
Net weight	**kg**	**Unit:27 Panel:5.5**			
Refrigerant equipment Heat exchanger		Louver fin & inner grooved tubing			
Refrigerant control		Electronic Expansion Valve			
Air handling equipment Fan type & Q'ty		Turbo fan × 1			
Motor	**W**	**140 ×1**			
Starting method		Direct line starting			
Air flow(Standard)	**CMM**	**Hi: 27 Me: 24 Lo: 20**		**Hi: 30 Me: 27 Lo: 23**	
Outside air intake		Possible			
Air filter, Q'ty		Pocket plastic net × 1(Washable)			
Shock & vibration isolator		Rubber sleeve(for fan motor)			
Insulation (noise & heat)		Polyurethane foam			
Operation control Operation switch		**Wired remote control switch (Optional:RC-E3) Wireless remote control switch (Optional:RCN-T-36W-E)**			
Room temperature control		Thermostat by electronics			
Safety equipment		Internal thermostat for fan motor. Frost protection thermostat			
Installation data Refrigerant piping size	**mm(in)**	**Liquid line:ϕ9.52(3/8") Gas line:ϕ15.88(5/8")**			
Connecting method		**Flare piping**			
Drain pump		Built-in Drain pump			
Drain hose		Connectable with VP20(I.D.20mm, O.D.26mm)			
Insulation for piping		Necessary (both Liquid & Gas lines)			
Accessories		**Mounting kit, Drain hose**			
Optional parts		**Decorative Panel**			

Notes (1) The data are measured at the following conditions.

Item / Operation	Indoor air temperature		Outdoor air temperature		Standards
	DB	WB	DB	WB	
Cooling*1	27℃	19℃	35℃	24℃	ISO-T1
Heating*2	20℃	—	7℃	6℃	

(2) This packaged air-conditioner is manufactured and tested in conformity with the following standard.
ISO-T1"UNITARY AIR-CONDITIONERS"

●Decorative Panel model (Optional)

Item / Model	Panel Part No.
FDT90,112,140,160 type	T-PSA-36W-E

(b) Ceiling cassette-4 way compact type (FDTC)

Models FDTC22KXE6, 28KXE6

Item \ Models		FDTC22KXE6	FDTC28KXE6
Nominal cooling capacity*1	**kW**	**2.2**	**2.8**
Nominal heating capacity*2	**kW**	**2.5**	**3.2**
Power source		**1 Phase 220-240V 50Hz/220V 60Hz**	
Noise level	dB(A)	Hi: 35 Me: 33 Lo: 32	
Exterior dimensions Height × Width × Depth	**mm**	**Unit:248 × 570 ×570 Panel:35 × 700 × 700**	
Net weight	**kg**	**Unit:14 Panel:3.5**	
Refrigerant equipment Heat exchanger		Louver fin & inner grooved tubing	
Refrigerant control		Electronic Expansion Valve	
Air handling equipment Fan type & Q'ty		Turbo fan × 1	
Motor	**W**	**52×1**	
Starting method		Direct line starting	
Air flow(Standard)	**CMM**	**Hi: 9.5 Me: 8.5 Lo: 8**	
Outside air intake		Not Possible	
Air filter, Q'ty		Pocket plastic net × 1(Washable)	
Shock & vibration isolator		Rubber sleeve(for fan motor)	
Insulation (noise & heat)		Polyurethane foam	
Operation control Operation switch		**Wired remote control switch (Optional:RC-E3) Wireless kit (Optional:RCN-TC-24W-ER)**	
Room temperature control		Thermostat by electronics	
Safety equipment		Internal thermostat for fan motor. Frost protection thermostat	
Installation data Refrigerant piping size	**mm(in)**	**Liquid line:ϕ6.35(1/4") Gas line:ϕ9.52(3/8")**	
Connecting method		**Flare piping**	
Drain pump		Built-in Drain pump	
Drain hose		Connectable with VP20(I.D.20mm, O.D.26mm)	
Insulation for piping		Necessary (both Liquid & Gas line)	
Accessories		**Mounting kit, Drain hose**	
Optional parts		**Decorative Panel**	

Notes (1) The data are measured at the following conditions.

Item / Operation	Indoor air temperature		Outdoor air temperature		Standards
	DB	WB	DB	WB	
Cooling*1	27℃	19℃	35℃	24℃	ISO-T1
Heating*2	20℃	—	7℃	6℃	

(2) This packaged air-conditioner is manufactured and tested in conformity with the following standard.
ISO-T1 "UNITARY AIR-CONDITIONERS"

●Decorative Panel model (Optional)

Item / Model	Panel Part No.
FDTC22,28 type	TC-PSA-24W-ER

Models FDTC36KXE6, 45KXE6, 56KXE6

Item \ Models		FDTC36KXE6	FDTC45KXE6	FDTC56KXE6
Nominal cooling capacity*1	**kW**	**3.6**	**4.5**	**5.6**
Nominal heating capacity*2	**kW**	**4.0**	**5.0**	**6.3**
Power source		**1 Phase 220-240V 50Hz/220V 60Hz**		
Noise level	dB(A)	Hi: 38 Me: 36 Lo: 34	Hi: 40 Me: 38 Lo: 36	Hi: 45 Me: 42 Lo: 39
Exterior dimensions Height × Width × Depth	**mm**	**Unit:248 × 570 × 570 Panel:35 × 700 × 700**		
Net weight	**kg**	**Unit:15 Panel:3.5**		
Refrigerant equipment Heat exchanger		Louver fin & inner grooved tubing		
Refrigerant control		Electronic Expansion Valve		
Air handling equipment Fan type & Q'ty		Turbo fan × 1		
Motor	**W**	**52 × 1**		
Starting method		Direct line starting		
Air flow(Standard)	**CMM**	**Hi: 10 Me: 9 Lo: 8**	**Hi: 11 Me: 10 Lo: 9**	**Hi: 13 Me: 11.5 Lo: 10**
Outside air intake		Not Possible		
Air filter, Q'ty		Pocket plastic net × 1(Washable)		
Shock & vibration isolator		Rubber sleeve(for fan motor)		
Insulation (noise & heat)		Polyurethane foam		
Operation control Operation switch		**Wired remote control switch (Optional:RC-E3) Wireless kit (Optional:RCN-TC-24W-ER)**		
Room temperature control		Thermostat by electronics		
Safety equipment		Internal thermostat for fan motor. Frost protection thermostat		
Installation data Refrigerant piping size	**mm(in)**	**Liquid line:φ6.35(1/4") Gas line:φ12.7(1/2")**		
Connecting method		**Flare piping**		
Drain pump		Built-in Drain pump		
Drain hose		Connectable with VP20(I.D.20mm, O.D.26mm)		
Insulation for piping		Necessary (both Liquid & Gas lines)		
Accessories		**Mounting kit, Drain hose**		
Optional parts		**Decorative Panel**		

Notes (1) The data are measured at the following conditions.

Item / Operation	Indoor air temperature		Outdoor air temperature		Standards
	DB	WB	DB	WB	
Cooling*1	27℃	19℃	35℃	24℃	ISO-T1
Heating*2	20℃	—	7℃	6℃	

(2) This packaged air-conditioner is manufactured and tested in conformity with the following standard.
ISO-T1 "UNITARY AIR-CONDITIONERS"

●Decorative Panel model (Optional)

Item / Model	Panel Part No.
FDTC36,45,56 type	TC-PSA-24W-ER

(c) Ceiling cassette-2 way type (FDTW)

Models FDTW28KXE6, 45KXE6, 56KXE6

Item \ Models		FDTW28KXE6	FDTW45KXE6	FDTW56KXE6
Nominal cooling capacity*1	**kW**	**2.8**	**4.5**	**5.6**
Nominal heating capacity*2	**kW**	**3.2**	**5.0**	**6.3**
Power source		**1 phase 220-240V 50Hz/220V 60Hz**		
Noise level	dB(A)	Hi: 39 Me: 34 Lo: 32		
Exterior dimensions Height × Width × Depth	**mm**	**Unit:287 × 817 × 620 Panel:8 × 1055 × 680**		
Net weight	**kg**	**Unit:18 Panel:7**	**Unit:19 Panel:7**	
Refrigerant equipment Heat exchanger		Louver fin & inner grooved tubing		
Refrigerant control		Electronic Expansion Valve		
Air handling equipment Fan type & Q'ty		Turbo fan × 1		
Motor	**W**	**30×1**		
Starting method		Direct line starting		
Air flow(Standard)	**CMM**	**Hi: 14 Me: 12 Lo: 10**		
Outside air intake		Possible		
Air filter, Q'ty		Pocket plastic net × 1(Washable)		
Shock & vibration isolator		Rubber sleeve (for fan motor)		
Insulation (noise & heat)		Polyurethane foam		
Operation control Operation switch		**Wired remote control switch (Optional:RC-E3) Wireless kit (Optional:RCN-KIT3-E)**		
Room temperature control		Thermostat by electronics		
Safety equipment		Internal thermostat for fan motor. Frost protection thermostat		
Installation data Refrigerant piping size	**mm(in)**	**Liquid line: ϕ6.35(1/4") Gas line: ϕ9.52(3/8")**	**Liquid line: ϕ6.35(1/4") Gas line: ϕ12.7(1/2")**	
Connecting method		**Flare piping**		
Drain pump		Built-in Drain pump		
Drain hose		Connectable with VP20(I.D.20mm, O.D.26mm)		
Insulation for piping		Necessary (both Liquid & Gas lines)		
Accessories		**Mounting kit, Drain hose**		
Optional parts		**Decorative Panel**		

Notes (1) The data are measured at the following conditions.

Item / Operation	Indoor air temperature		Outdoor air temperature		Standards
	DB	WB	DB	WB	
Cooling*1	27℃	19℃	35℃	24℃	ISO-T1
Heating*2	20℃	—	7℃	6℃	

(2) This packaged air-conditioner is manufactured and tested in conformity with the following standard.
ISO-T1 "UNITARY AIR-CONDITIONERS"

●Decorative Panel model (Optional)

Item / Model	Panel Part No.
FDTW28, 45, 56 type	TW-PSA-24W-E

Models FDTW71KXE6, 90KXE6

Item \ Models		FDTW71KXE6	FDTW90KXE6
Nominal cooling capacity*1	**kW**	**7.1**	**9.0**
Nominal heating capacity*2	**kW**	**8.0**	**10.0**
Power source		**1 Phase 220-240V 50Hz**	
Noise level	dB(A)	Hi: 41 Me: 36 Lo: 35	Hi: 41 Me: 37 Lo: 36
Exterior dimensions Height × Width × Depth	**mm**	**Unit:342 ×1054 × 620 Panel:8 ×1300 × 680**	
Net weight	**kg**	**Unit:26 Panel:9**	
Refrigerant equipment Heat exchanger		Louver fin & inner grooved tubing	
Refrigerant control		Electronic Expansion Valve	
Air handling equipment Fan type & Q'ty		Turbo fan × 1	
Motor	**W**	**35×1**	**40×1**
Starting method		Direct line starting	
Air flow(Standard)	**CMM**	**Hi: 16 Me: 13 Lo: 11**	**Hi: 19 Me: 16 Lo: 12**
Outside air intake		Possible	
Air filter, Q'ty		Pocket plastic net × 1(Washable)	
Shock & vibration isolator		Rubber sleeve(for fan motor)	
Insulation (noise & heat)		Polyurethane foam	
Operation control Operation switch		**Wired remote control switch (Optional:RC-E3) Wireless kit (Optional:RCN-KIT3-E)**	
Room temperature control		Thermostat by electronics	
Safety equipment		Internal thermostat for fan motor. Frost protection thermostat	
Installation data Refrigerant piping size	**mm(in)**	**Liquid line:Φ9.52(3/8"),Gas line:Φ15.88(5/8")**	
Connecting method		**Flare piping**	
Drain pump		Built-in Drain pump	
Drain hose		Connectable with VP20(I.D.20mm, O.D.26mm)	
Insulation for piping		Necessary (both Liquid & Gas lines)	
Accessories		**Mounting kit, Drain hose**	
Optional parts		**Decorative Panel**	

Notes (1) The data are measured at the following conditions.

Item / Operation	Indoor air temperature		Outdoor air temperature		Standards
	DB	WB	DB	WB	
Cooling*1	27℃	19℃	35℃	24℃	ISO-T1
Heating*2	20℃	—	7℃	6℃	

(2) This packaged air-conditioner is manufactured and tested in conformity with the following standard.
ISO-T1 "UNITARY AIR-CONDITIONERS"

●Decorative Panel model (Optional)

Item / Model	Panel Part No.
FDTW71,90 type	TW-PSA-34W-E

Models FDTW112KXE6, 140KXE6

Item \ Models		FDTW112KXE6	FDTW140KXE6
Nominal cooling capacity*1	**kW**	**11.2**	**14.0**
Nominal heating capacity*2	**kW**	**12.5**	**16.0**
Power source		**1 Phase 220-240V 50Hz**	
Noise level	dB(A)	Hi: 44 Me: 38 Lo: 37	Hi: 45 Me: 41 Lo: 39
Exterior dimensions Height × Width × Depth	**mm**	**Unit:357 ×1524 × 620 Panel:8 ×1770 × 680**	
Net weight	**kg**	**Unit:38 Panel:11**	
Refrigerant equipment Heat exchanger		Louver fin & inner grooved tubing	
Refrigerant control		Electronic Expansion Valve	
Air handling equipment Fan type & Q'ty		Turbo fan ×2	
Motor	**W**	**40 × 2**	**50 × 2**
Starting method		Direct line starting	
Air flow(Standard)	**CMM**	**Hi: 28 Me: 25 Lo: 23**	**Hi: 32 Me: 28 Lo: 24**
Outside air intake		Possible	
Air filter, Q'ty		Pocket plastic net × 2(Washable)	
Shock & vibration isolator		Rubber sleeve(for fan motor)	
Insulation (noise & heat)		Polyurethane foam	
Operation control Operation switch		**Wired remote control switch (Optional:RC-E3) Wireless kit (Optional:RCN-KIT3-E)**	
Room temperature control		Thermostat by electronics	
Safety equipment		Internal thermostat for fan motor. Frost protection thermostat	
Installation data Refrigerant piping size	**mm(in)**	**Liquid line:Φ9.52(3/8"),Gas line:Φ15.88(5/8")**	
Connecting method		**Flare piping**	
Drain pump		Built-in Drain pump	
Drain hose		Connectable with VP20(I.D.20mm, O.D.26mm)	
Insulation for piping		Necessary (both Liquid & Gas linse)	
Accessories		**Mounting kit, Drain hose**	
Optional parts		**Decorative Panel**	

Notes (1) The data are measured at the following conditions.

Item / Operation	Indoor air temperature		Outdoor air temperature		Standards
	DB	WB	DB	WB	
Cooling*1	27℃	19℃	35℃	24℃	ISO-T1
Heating*2	20℃	—	7℃	6℃	

(2) This packaged air-conditioner is manufactured and tested in conformity with the following standard.
ISO-T1 "UNITARY AIR-CONDITIONERS"

●Decorative Panel model (Optional)

Item / Model	Panel Part No.
FDTW112,140 type	TW-PSA-44W-E

(d) Ceiling cassette-1 way type (FDTS)

Models FDTS45KXE6, 71KXE6

Item	Models	FDTS45KXE6	FDTS71KXE6
Nominal cooling capacity*1	**kW**	**4.5**	**7.1**
Nominal heating capacity*2	**kW**	**5.0**	**8.0**
Power source		**1 Phase 220-240V 50Hz/220V 60Hz**	
Noise level	dB(A)	Hi: 43 Me: 38 Lo: 36	Hi: 44 Me: 38 Lo: 36
Exterior dimensions Height × Width × Depth	**mm**	**Unit:194 × 1040 ×650 Panel:10 × 1290 ×770**	**Unit:194 × 1300 ×650 Panel:10 × 1500 ×790**
Net weight	**kg**	**Unit:26 Panel:6**	**Unit:30 Panel:7**
Refrigerant equipment Heat exchanger		Louver fin & inner grooved tubing	
Refrigerant control		Electronic Expansion Valve	
Air handling equipment Fan type & Q'ty		Centrifugal fan × 2	Centrifugal fan × 4
Motor	**W**	**40×1**	**35×2**
Starting method		Direct line starting	
Air flow(Standard)	**CMM**	**Hi: 14 Me: 12 Lo: 10**	**Hi: 18 Me: 15 Lo: 12**
Outside air intake		Possible	
Air filter, Q'ty		Pocket plastic net × 1(Washable)	
Shock & vibration isolator		Rubber sleeve(for fan motor)	
Insulation (noise & heat)		Polyurethane foam	
Operation control Operation switch		**Wired remote control switch (Optional:RC-E3) Wireless kit (Optional:RCN-KIT3-E)**	
Room temperature control		Thermostat by electronics	
Safety equipment		Internal thermostat for fan motor. Frost protection thermostat	
Installation data Refrigerant piping size	**mm(in)**	**Liquid line:ϕ6.35(1/4") Gas line:ϕ12.7(1/2")**	**Liquid line:ϕ9.52(3/8") Gas line:ϕ15.88(5/8")**
Connecting method		**Flare piping**	
Drain pump		Built-in Drain pump	
Drain hose		Connectable with VP20(I.D.20mm, O.D.26mm)	
Insulation for piping		Necessary (both Liquid & Gas lines)	
Accessories		**Mounting kit, Drain hose**	
Optional parts		**Decorative Panel**	

Notes (1) The data are measured at the following conditions.

Item / Operation	Indoor air temperature		Outdoor air temperature		Standards
	DB	WB	DB	WB	
Cooling*1	27℃	19℃	35℃	24℃	ISO-T1
Heating*2	20℃	—	7℃	6℃	

(2) This packaged air-conditioner is manufactured and tested in conformity with the following standard.
ISO-T1 "UNITARY AIR-CONDITIONERS"

●Decorative Panel model (Optional)

Item / Model	Panel Part No.
	With Auto Swing
FDTS45 type	TS-PSA-29W-E
FDTS71 type	TS-PSA-39W-E

(e) Ceiling cassette-1 way compact type (FDTQ)

Models FDTQ22KXE6

Item \ Model		FDTQ22KXE6			
Panel name		**Direct blow panel**		**Duct panel(3)**	
Panel model(Option)		**TQ-PSA-15W-E**	**TQ-PSB-15W-E**	**QR-PNA-14W-ER**	**QR-PNB-14W-ER**
Nominal cooling capacity*1	**kW**	**2.2**			
Nominal heating capacity*2	**kW**	**2.5**			
Power source		**1 Phase, 220-240V 50Hz/220V 60Hz**			
Noise level	dB(A)	Hi: 38 Lo: 33		Hi: 42 Lo: 39	
Exterior dimensions Height × Width × Depth	**mm**	**Unit:250×570×570 Panel:35×625×650**	**Unit:250×570×570 Panel:35×780×650**	**Unit:250×570×570 Panel:35×625×650**	**Unit:250×570×570 Panel:35×780×650**
Net weight	**kg**	**Unit:19 Panel:2.5**	**Unit:19 Panel:3**	**Unit:19 Panel:2.5**	**Unit:19 Panel:3**
Refrigerant equipment Heat exchanger		Louver fin & inner grooved tubing			
Refrigerant control		Electronic Expansion Valve			
Air handling equipment Fan type & Q'ty		Centrifugal fan ×1			
Motor	**W**	**20 × 1**			
Starting method		Direct line starting			
Air flow(Standard)	**CMM**	**Hi: 7 Lo: 5.4**		**Hi: 7 Lo: 6.5**	
Available static pressure(at Hi)	**Pa**	—		**30**	
Outside air intake		Possible			
Air filter, Q'ty		Pocket plastic net × 1(Washable)			
Shock & vibration isolator		Rubber sleeve(for fan motor)			
Insulation (noise & heat)		Polyurethane foam			
Operation control Operation switch		**Wired remote control switch (Optional:RC-E3) Wireless kit (Optional:RCN-KIT3-E)**			
Room temperature control		Thermostat by electronics			
Safety equipment		Internal thermostat for fan motor. Frost protection thermostat			
Installation data Refrigerant piping size	**mm(in)**	**Liquid line: ϕ6.35(1/4"), Gas line: ϕ9.52(3/8")**			
Connecting method		**Flare piping**			
Drain pump		Built-in Drain pump			
Drain hose		Connectable with VP20(I.D.20mm, O.D.26mm)			
Insulation for piping		Necessary (both Liquid & Gas lines)			
Accessories		**Mounting kit, Drain hose**			
Optional parts		**Decorative Panel**			

Notes (1) The data are measured at the following conditions.

Item / Operation	Indoor air temperature		Outdoor air temperature		Standards
	DB	WB	DB	WB	
Cooling*1	27℃	19℃	35℃	24℃	ISO-T1
Heating*2	20℃	—	7℃	6℃	

(2) This packaged air-conditioner is manufactured and tested in conformity with the following standard.
ISO-T1 "UNITARY AIR-CONDITIONERS"

(3) This is the panel to be used when modified to the Duct panel type on site.

Models FDTQ28KXE6

Item \ Model		FDTQ28KXE6			
Panel name		**Direct blow panel**		**Duct panel(3)**	
Panel model(Option)		**TQ-PSA-15W-E**	**TQ-PSB-15W-E**	**QR-PNA-14W-ER**	**QR-PNB-14W-ER**
Nominal cooling capacity*1	**kW**	**2.8**			
Nominal heating capacity*2	**kW**	**3.2**			
Power source		**1 Phase, 220-240V 50Hz/220V 60Hz**			
Noise level	dB(A)	Hi: 38 Lo: 33		Hi: 42 Lo:39	
Exterior dimensions Height × Width × Depth	**mm**	**Unit:250×570×570 Panel:35×625×650**	**Unit:250×570×570 Panel:35×780×650**	**Unit:250×570×570 Panel:35×625×650**	**Unit:250×570×570 Panel:35×780×650**
Net weight	**kg**	**Unit:19 Panel:2.5**	**Unit:19 Panel:3**	**Unit:19 Panel:2.5**	**Unit:19 Panel:3**
Refrigerant equipment Heat exchanger		Slit fin & inner grooved tubing			
Refrigerant control		Electronic Expansion Valve			
Air handling equipment Fan type & Q'ty		Centrifugal fan ×1			
Motor	**W**	**20 × 1**			
Starting method		Direct line starting			
Air flow(Standard)	**CMM**	**Hi: 7 Lo: 5.4**		**Hi: 7 Lo: 6.5**	
Available static pressure(at Hi)	**Pa**	—		**30**	
Outside air intake		Possible			
Air filter, Q'ty		Pocket plastic net × 1(Washable)			
Shock & vibration isolator		Rubber sleeve(for fan motor)			
Insulation (noise & heat)		Polyurethane foam			
Operation control Operation switch		**Wired remote control switch (Optional:RC-E3) Wireless kit (Optional:RCN-KIT3-E)**			
Room temperature control		Thermostat by electronics			
Safety equipment		Internal thermostat for fan motor. Frost protection thermostat			
Installation data Refrigerant piping size	**mm(in)**	**Liquid line: ϕ6.35(1/4"), Gas line: ϕ9.52(3/8")**			
Connecting method		**Flare piping**			
Drain pump		Built-in Drain pump			
Drain hose		Connectable with VP20(I.D.20mm, O.D.26mm)			
Insulation for piping		Necessary (both Liquid & Gas lines)			
Accessories		**Mounting kit, Drain hose**			
Optional parts		**Decorative Panel**			

Notes (1) The data are measured at the following conditions.

Item / Operation	Indoor air temperature		Outdoor air temperature		Standards
	DB	WB	DB	WB	
Cooling*1	27℃	19℃	35℃	24℃	ISO-T1
Heating*2	20℃	—	7℃	6℃	

(2) This packaged air-conditioner is manufactured and tested in conformity with the following standard.
ISO-T1 "UNITARY AIR-CONDITIONERS"

(3) This is the panel to be used when modified to the Duct panel type on site.

Models FDTQ36KXE6

Item \ Model		FDTQ36KXE6			
Panel name		**Direct blow panel**		**Duct panel(3)**	
Panel model(Option)		**TQ-PSA-15W-E**	**TQ-PSB-15W-E**	**QR-PNA-14W-ER**	**QR-PNB-14W-ER**
Nominal cooling capacity*1	**kW**	**3.6**			
Nominal heating capacity*2	**kW**	**4.0**			
Power source		**1 Phase, 220-240V 50Hz/220V 60Hz**			
Noise level	dB(A)	Hi: 38 Lo: 33		Hi: 42 Lo:39	
Exterior dimensions Height × Width × Depth	**mm**	**Unit:250×570×570 Panel:35×625×650**	**Unit:250×570×570 Panel:35×780×650**	**Unit:250×570×570 Panel:35×625×650**	**Unit:250×570×570 Panel:35×780×650**
Net weight	**kg**	**Unit:19 Panel:2.5**	**Unit:19 Panel:3**	**Unit:19 Panel:2.5**	**Unit:19 Panel:3**
Refrigerant equipment Heat exchanger		Slit fin & inner grooved tubing			
Refrigerant control		Electronic Expansion Valve			
Air handling equipment Fan type & Q'ty		Centrifugal fan ×1			
Motor	**W**	**20 × 1**			
Starting method		Direct line starting			
Air flow(Standard)	**CMM**	**Hi: 7 Lo: 5.4**		**Hi: 7 Lo: 6.5**	
Available static pressure(at Hi)	**Pa**	**—**		**30**	
Outside air intake		Possible			
Air filter, Q'ty		Pocket plastic net × 1(Washable)			
Shock & vibration isolator		Rubber sleeve (for fan motor)			
Insulation (noise & heat)		Polyurethane foam			
Operation control Operation switch		**Wired remote control switch (Optional:RC-E3) Wireless kit (Optional:RCN-KIT3-E)**			
Room temperature control		Thermostat by electronics			
Safety equipment		Internal thermostat for fan motor. Frost protection thermostat			
Installation data Refrigerant piping size	**mm(in)**	**Liquid line: ϕ6.35(1/4"), Gas line: ϕ12.7(1/2")**			
Connecting method		**Flare piping**			
Drain pump		Built-in Drain pump			
Drain hose		Connectable with VP20(I.D.20mm, O.D.26mm)			
Insulation for piping		Necessary (both Liquid & Gas lines)			
Accessories		**Mounting kit, Drain hose**			
Optional parts		**Decorative Panel**			

Notes (1) The data are measured at the following conditions.

Item / Operation	Indoor air temperature		Outdoor air temperature		Standards
	DB	WB	DB	WB	
Cooling*1	27℃	19℃	35℃	24℃	ISO-T1
Heating*2	20℃	—	7℃	6℃	

(2) This packaged air-conditioner is manufactured and tested in conformity with the following standard.
ISO-T1 "UNITARY AIR-CONDITIONERS"

(3) This is the panel to be used when modified to the Duct panel type on site.

(f) Duct connected-High static pressure type (FDU)

Models FDU71KXE6, 90KXE6

Item \ Models		FDU71KXE6	FDU90KXE6
Nominal cooling capacity*1	**kW**	**7.1**	**9.0**
Nominal heating capacity*2	**kW**	**8.0**	**10.0**
Power source		**1 Phase 220-240V 50Hz**	
Noise level	dB(A)	Hi: 41, Lo: 37	Hi: 42, Lo: 37
Exterior dimensions Height × Width × Depth	**mm**	**295 × 850 × 650**	**350 × 1370 × 650**
Net weight	**kg**	**40**	**63**
Refrigerant equipment Heat exchanger		Louver fin & inner grooved tubing	
Refrigerant control		Electronic Expansion Valve	
Air handling equipment Fan type & Q'ty		Centrifugal fan × 2	
Motor	**W**	**230×1**	**280×1**
Starting method		Direct line starting	
Air flow(Standard)	**CMM**	**Hi: 25 Lo: 20**	**Hi: 34 Lo: 27**
Available static pressure	**Pa**	**Standard:50, MAX:130**	
Outside air intake		Possible (on return duct)	
Air filter, Q'ty		Installed on side	
Shock & vibration isolator		Rubber sleeve(for fan motor)	
Insulation (noise & heat)		Polyurethane foam	
Operation control Operation switch		**Wired remote control switch (Optional:RC-E3) Wireless kit (Optional:RCN-KIT3-E)**	
Room temperature control		Thermostat by electronics	
Safety equipment		Internal thermostat for fan motor. Frost protection thermostat	
Installation data Refrigerant piping size	**mm(in)**	**Liquid line: ϕ9.52(3/8"),Gas line: ϕ15.88(5/8")**	
Connecting method		**Flare piping**	
Drain pump		Built-in Drain pump	
Drain hose		Connectable with VP20 (I.D. 20mm, O.D. 26mm)	
Insulation for piping		Necessary (both Liquid & Gas lines)	
Accessories		Drain hose	
Optional parts		–	

Notes (1) The data are measured at the following conditions.

Item / Operation	Indoor air temperature		Outdoor air temperature		Standards
	DB	WB	DB	WB	
Cooling*1	27℃	19℃	35℃	24℃	ISO-T1
Heating*2	20℃	—	7℃	6℃	

(2) This packaged air-conditioner is manufactured and tested in conformity with the following standard.
ISO-T1 "UNITARY AIR-CONDITIONERS"

Models FDU112KXE6, 140KXE6

Item \ Models		FDU112KXE6	FDU140KXE6
Nominal cooling capacity*1	**kW**	**11.2**	**14.0**
Nominal heating capacity*2	**kW**	**12.5**	**16.0**
Power source		**1 Phase 220-240V 50Hz**	
Noise level	dB(A)	Hi: 42, Lo: 38	Hi: 43, Lo: 39
Exterior dimensions Height × Width × Depth	**mm**	**350 × 1370 × 650**	
Net weight	**kg**	**63**	
Refrigerant equipment Heat exchanger		Louver fin & inner grooved tubing	
Refrigerant control		Electronic Expansion Valve	
Air handling equipment Fan type & Q'ty		Centrifugal fan × 2	
Motor	**W**	**280×1**	**370×1**
Starting method		Direct line starting	
Air flow(Standard)	**CMM**	**Hi: 34 Lo: 27**	**Hi: 42 Lo: 33.5**
Available static pressure	**Pa**	**Standard:50, MAX:130**	
Outside air intake		Possible (on return duct)	
Air filter, Q'ty		Installed on side	
Shock & vibration isolator		Rubber sleeve(for fan motor)	
Insulation (noise & heat)		Polyurethane foam	
Operation control Operation switch		**Wired remote control switch (Optional:RC-E3)** **Wireless kit (Optional:RCN-KIT3-E)**	
Room temperature control		Thermostat by electronics	
Safety equipment		Internal thermostat for fan motor. Frost protection thermostat	
Installation data Refrigerant piping size	**mm(in)**	**Liquid line: ϕ9.52(3/8"),Gas line: ϕ15.88(5/8")**	
Connecting method		**Flare piping**	
Drain pump		Built-in Drain pump	
Drain hose		Connectable with VP20 (I.D. 20mm, O.D. 26mm)	
Insulation for piping		Necessary (both Liquid & Gas lines)	
Accessories		Drain hose	
Optional parts		–	

Notes (1) The data are measured at the following conditions.

Item / Operation	Indoor air temperature		Outdoor air temperature		Standards
	DB	WB	DB	WB	
Cooling*1	27℃	19℃	35℃	24℃	ISO-T1
Heating*2	20℃	—	7℃	6℃	

(2) This packaged air-conditioner is manufactured and tested in conformity with the following standard.
ISO-T1 "UNITARY AIR-CONDITIONERS"

(g) Duct connected-Low/Middle static pressure type (FDUM)

Models FDUM22KXE6, 28KXE6

Item	Models	FDUM22KXE6	FDUM28KXE6
Nominal cooling capacity*1	**kW**	**2.2**	**2.8**
Nominal heating capacity*2	**kW**	**2.5**	**3.2**
Power source		**1 Phase 220-240V 50Hz/220V 60Hz**	
Noise level	dB(A)	Hi: 33 Me: 31 Lo: 28	Hi: 34 Me: 31 Lo: 28
Exterior dimensions Height × Width × Depth	**mm**	**299 × 750 × 635**	
Net weight	**kg**	**33**	**34**
Refrigerant equipment Heat exchanger		Louver fin & inner grooved tubing	
Refrigerant control		Electronic expansion valve	
Air handling equipment Fan type & Q'ty		Centrifugal fan × 2	
Motor	**W**	**32×1**	**60×1**
Starting method		Direct line start	
Air flow(Standard)	**CMM**	**Hi: 10 Me: 9 Lo: 8**	**Hi: 12 Me: 11 Lo: 10**
Available static pressure (at Hi)	**Pa**	**Standard:50/40, Hi speed:85/90**	
Outside air intake		Possible	
Air filter, Q'ty		Installed on side	
Shock & vibration absorber		Rubber sleeve(for fan motor)	
Insulation (noise & heat)		Polyurethane foam	
Operation control Operation switch		**Wired remote control switch (Optional:RC-E3) Wireless kit(Optional:RCN-KIT3-E)**	
Room temperature control		Thermostat by electronics	
Safety equipment		Internal thermostat for fan motor. Frost protection thermostat	
Installation data Refrigerant piping size	**mm(in)**	**Liquid line:φ6.35(1/4"),Gas line:φ9.52(3/8")**	
Connecting method		**Flare piping**	
Drain pump		Built-in Drain pump	
Drain hose		Connectable with VP20(I.D.20mm, O.D.26mm)	
Insulation for piping		Necessary (both Liquid & Gas lines)	
Accessories		**Drain hose**	

Notes (1) The data are measured at the following conditions.

Item / Operation	Indoor air temperature		Outdoor air temperature		Standards
	DB	WB	DB	WB	
Cooling*1	27℃	19℃	35℃	24℃	ISO-T1
Heating*2	20℃	—	7℃	6℃	

(2) This packaged air-conditioner is manufactured and tested in conformity with the following standard.
ISO-T1 "UNITARY AIR-CONDITIONERS"

Models FDUM36KXE6, 45KXE6, 56KXE6

Item \ Models		FDUM36KXE6	FDUM45KXE6	FDUM56KXE6
Nominal cooling capacity*1	**kW**	**3.6**	**4.5**	**5.6**
Nominal heating capacity*2	**kW**	**4.0**	**5.0**	**6.3**
Power source		**1 Phase 220-240V 50Hz/220V 60Hz**		
Noise level	dB(A)	Hi: 34 Me: 31 Lo: 28	Hi: 35 Me: 32 Lo: 29	
Exterior dimensions Height × Width × Depth	**mm**	**299 × 750 × 635**		
Net weight	**kg**	**34**		
Refrigerant equipment Heat exchanger		Louver fin & inner grooved tubing		
Refrigerant control		Electronic expansion valve		
Air handling equipment Fan type & Q'ty		Centrifugal fan × 2		
Motor	**W**	**60× 1**		
Starting method		Direct line start		
Air flow(Standard)	**CMM**	**Hi: 12 Me: 11 Lo: 10**	**Hi: 14 Me: 12 Lo: 11**	
Available static pressure (at Hi)	**Pa**	**Standard:50/40, Hi speed:85/90**		
Outside air intake		Possible		
Air filter, Q'ty		Installed on side		
Shock & vibration absorber		Rubber sleeve(for fan motor)		
Insulation (noise & heat)		Polyurethane foam		
Operation control Operation switch		**Wired remote control switch (Optional:RC-E3)** **Wireless kit (Optional:RCN-KIT3-E)**		
Room temperature control		Thermostat by electronics		
Safety equipment		Internal thermostat for fan motor. Frost protection thermostat		
Installation data Refrigerant piping size	**mm(in)**	**Liquid line:ϕ6.35(1/4"),Gas line:ϕ12.7(1/2")**		
Connecting method		**Flare piping**		
Drain pump		Built-in Drain pump		
Drain hose		Connectable with VP20(I.D.20mm, O.D.26mm)		
Insulation for piping		Necessary (both Liquid & Gas lines)		
Accessories		**Drain hose**		

Notes (1) The data are measured at the following conditions.

Item / Operation	Indoor air temperature		Outdoor air temperature		Standards
	DB	WB	DB	WB	
Cooling*1	27℃	19℃	35℃	24℃	ISO-T1
Heating*2	20℃	—	7℃	6℃	

(2) This packaged air-conditioner is manufactured and tested in conformity with the following standard.
ISO-T1 "UNITARY AIR-CONDITIONERS"

Models FDUM71KXE6, 90KXE6

Item \ Models		FDUM71KXE6	FDUM90KXE6
Nominal cooling capacity*1	**kW**	**7.1**	**9.0**
Nominal heating capacity*2	**kW**	**8.0**	**10.0**
Power source		**1 Phase 220-240V 50Hz/220V 60Hz**	
Noise level	dB(A)	Hi: 35 Me: 32 Lo: 29	Hi: 36 Me: 33 Lo: 30
Exterior dimensions Height × Width × Depth	**mm**	**299 × 950 × 635**	
Net weight	**kg**	**40**	
Refrigerant equipment Heat exchanger		Louver fin & inner grooved tubing	
Refrigerant control		Electronic expansion valve	
Air handling equipment Fan type & Q'ty		Centrifugal fan × 2	
Motor	**W**	**100×1**	
Starting method		Direct line start	
Air flow(Standard)	**CMM**	**Hi: 18 Me: 16 Lo: 14**	**Hi: 20 Me: 18 Lo: 15**
Available static pressure (at Hi)	**Pa**	**Standard:50/40, Hi speed:85/100**	
Outside air intake		Possible	
Air filter, Q'ty		Installed on side	
Shock & vibration absorber		Rubber sleeve(for fan motor)	
Insulation (noise & heat)		Polyurethane foam	
Operation control Operation switch		**Wired remote control switch (Optional:RC-E3) Wireless kit (Optional:RCN-KIT3-E)**	
Room temperature control		Thermostat by electronics	
Safety equipment		Internal thermostat for fan motor. Frost protection thermostat	
Installation data Refrigerant piping size	**mm(in)**	**Liquid line:ϕ9.52(3/8"),Gas line:ϕ15.88(5/8")**	
Connecting method		**Flare piping**	
Drain pump		Built-in Drain pump	
Drain hose		Connectable with VP20(I.D.20mm, O.D.26mm)	
Insulation for piping		Necessary (both Liquid & Gas lines)	
Accessories		**Drain hose**	

Notes (1) The data are measured at the following conditions.

Item / Operation	Indoor air temperature		Outdoor air temperature		Standards
	DB	WB	DB	WB	
Cooling*1	27℃	19℃	35℃	24℃	ISO-T1
Heating*2	20℃	—	7℃	6℃	

(2) This packaged air-conditioner is manufactured and tested in conformity with the following standard.
ISO-T1 "UNITARY AIR-CONDITIONERS"

Models FDUM112KXE6, 140KXE6

Item \ Models		FDUM112KXE6	FDUM140KXE6
Nominal cooling capacity*1	**kW**	**11.2**	**14.0**
Nominal heating capacity*2	**kW**	**12.5**	**16.0**
Power source		**1 Phase 220-240V 50Hz/220V 60Hz**	
Noise level	dB(A)	Hi: 37 Me: 35 Lo: 32	Hi: 38 Me: 36 Lo: 33
Exterior dimensions Height × Width × Depth	**mm**	**350 × 1370 × 635**	
Net weight	**kg**	**59**	**59**
Refrigerant equipment Heat exchanger		Louver fin & inner grooved tubing	
Refrigerant control		Electronic expansion valve	
Air handling equipment Fan type & Q'ty		Centrifugal fan × 3	
Motor	**W**	**50 × 1 + 100 × 1**	
Starting method		Direct line start	
Air flow(Standard)	**CMM**	**Hi: 28 Me: 25 Lo: 22**	**Hi: 34 Me: 31 Lo: 27**
Available static pressure (at Hi)	**Pa**	**Standard:60/60, Hi speed:90/100**	**Standard:60/55, Hi speed:85/100**
Outside air intake		Possible	
Air filter, Q'ty		Installed on side	
Shock & vibration absorber		Rubber sleeve(for fan motor)	
Insulation (noise & heat)		Polyurethane foam	
Operation control Operation switch		**Wired remote control switch (Optional:RC-E3)** **Wireless kit (Optional:RCN-KIT3-E)**	
Room temperature control		Thermostat by electronics	
Safety equipment		Internal thermostat for fan motor. Frost protection thermostat	
Installation data Refrigerant piping size	**mm(in)**	**Liquid line:ϕ9.52(3/8"),Gas line:ϕ15.88(5/8")**	
Connecting method		**Flare piping**	
Drain pump		Built-in Drain pump	
Drain hose		Connectable with VP20(I.D.20mm, O.D.26mm)	
Insulation for piping		Necessary (both Liquid & Gas lines)	
Accessories		**Drain hose**	

Notes (1) The data are measured at the following conditions.

Item / Operation	Indoor air temperature		Outdoor air temperature		Standards
	DB	WB	DB	WB	
Cooling*1	27℃	19℃	35℃	24℃	ISO-T1
Heating*2	20℃	—	7℃	6℃	

(2) This packaged air-conditioner is manufactured and tested in conformity with the following standard.
ISO-T1 "UNITARY AIR-CONDITIONERS"

(h) Duct connected (Ultra thin)-Low static pressure type (FDQS)

Models FDQS22KXE6, 28KXE6, 36KXE6

Item \ Models		FDQS22KXE6	FDQS28KXE6	FDQS36KXE6
Nominal cooling capacity*1	**kW**	**2.2**	**2.8**	**3.6**
Nominal heating capacity*2	**kW**	**2.5**	**3.2**	**4.0**
Power source		**1 Phase 220-240V 50Hz**		
Noise level	dB(A)	Rear air return Hi:37 Me:35 Lo:33 Bottom air return Hi:43 Me:41 Lo:39		
Exterior dimensions Height × Width × Depth	**mm**	**180 × 940 × 580**		
Net weight	**kg**	**27**		**28**
Refrigerant equipment Heat exchanger		Louver fin & inner grooved tubing		
Refrigerant control		Electronic Expansion Valve		
Air handling equipment Fan type & Q'ty		Centrifugal fan × 1		
Motor	**W**	**25×1**		
Starting method		Direct line starting		
Air flow(Standard)	**CMM**	**Hi:9 Me:8 Lo:7.5**		
Available static pressure (at Hi)	**Pa**	**Standard:15, Maximum:30**		
Outside air intake		—		
Air filter, Q'ty		Installed on side		
Shock & vibration isolator		Rubber sleeve(for fan motor)		
Insulation (noise & heat)		Polyurethane foam		
Operation control Operation switch		**Wired remote control switch (Optional:RC-E3) Wireless kit (Optional:RCN-KIT3-E)**		
Room temperature control		Thermostat by electronics		
Safety equipment		Internal thermostat for fan motor. Frost protection thermostat		
Installation data Refrigerant piping size	**mm(in)**	**Liquid line: ϕ6.35(1/4") Gas line: ϕ9.52(3/8")**		**Liquid line: ϕ6.35(1/4") Gas line: ϕ12.7(1/2")**
Connecting method		**Flare piping**		
Drain pump		Built-in Drain pump		
Drain hose		Connectable with VP20(I.D.20mm, O.D.26mm)		
Insulation for piping		Necessary (both Liquid & Gas lines)		
Accessories		**Mounting kit, Drain hose**		
Optional parts		—		

Notes (1) The data are measured at the following conditions.

Item / Operation	Indoor air temperature		Outdoor air temperature		Standards
	DB	WB	DB	WB	
Cooling*1	27℃	19℃	35℃	24℃	ISO-T1
Heating*2	20℃	—	7℃	6℃	

(2) This packaged air-conditioner is manufactured and tested in conformity with the following standard.
ISO-T1 "UNITARY AIR-CONDITIONERS"

Models FDQS45KXE6, 56KXE6

Item \ Models		FDQS45KXE6	FDQS56KXE6
Nominal cooling capacity*1	**kW**	**4.5**	**5.6**
Nominal heating capacity*2	**kW**	**5.0**	**6.0**
Power source		**1 Phase 220-240V 50Hz**	
Noise level	dB(A)	Rear air return Hi:37 Me:35 Lo:33 Bottom air return Hi:43 Me:41 Lo:39	
Exterior dimensions Height × Width × Depth	**mm**	**180 × 940 × 580**	
Net weight	**kg**	**28**	
Refrigerant equipment Heat exchanger		Louver fin & inner grooved tubing	
Refrigerant control		Electronic Expansion Valve	
Air handling equipment Fan type & Q'ty		Centrifugal fan × 1	
Motor	**W**	**25×1**	
Starting method		Direct line starting	
Air flow(Standard)	**CMM**	**Hi:11 Me:10 Lo:9**	
Available static pressure (at Hi)	**Pa**	**Standard:15, Maximum:30**	
Outside air intake		—	
Air filter, Q'ty		Installed on side	
Shock & vibration isolator		Rubber sleeve(for fan motor)	
Insulation (noise & heat)		Polyurethane foam	
Operation control Operation switch		**Wired remote control switch (Optional:RC-E3)** **Wireless kit (Optional:RCN-KIT3-E)**	
Room temperature control		Thermostat by electronics	
Safety equipment		Internal thermostat for fan motor. Frost protection thermostat	
Installation data Refrigerant piping size	**mm(in)**	**Liquid line: ϕ6.35(1/4")** **Gas line: ϕ12.7(1/2")**	
Connecting method		**Flare piping**	
Drain pump		Built-in Drain pump	
Drain hose		Connectable with VP20(I.D.20mm, O.D.26mm)	
Insulation for piping		Necessary (both Liquid & Gas lines)	
Accessories		**Mounting kit, Drain hose**	
Optional parts		—	

Notes (1) The data are measured at the following conditions.

Item / Operation	Indoor air temperature		Outdoor air temperature		Standards
	DB	WB	DB	WB	
Cooling*1	27℃	19℃	35℃	24℃	ISO-T1
Heating*2	20℃	—	7℃	6℃	

(2) This packaged air-conditioner is manufactured and tested in conformity with the following standard.
ISO-T1 "UNITARY AIR-CONDITIONERS"

(I) Wall mounted type (FDK)

Models FDK22KXE6, 28KXE6, 36KXE6

Item \ Models		FDK22KXE6	FDK28KXE6	FDK36KXE6
Nominal cooling capacity*1	**kW**	**2.2**	**2.8**	**3.6**
Nominal heating capacity*2	**kW**	**2.5**	**3.2**	**4.0**
Power source		**1 Phase 220-240V 50Hz/220V 60Hz**		
Noise level	dB(A)	Hi: 40 Me: 39 Lo: 37		Hi: 41 Me: 39 Lo: 37
Exterior dimensions Height × Width × Depth	**mm**	**298 × 840 × 259**		
Net weight	**kg**	**12**		
Refrigerant equipment Heat exchanger		Louver fin & inner grooved tubing		
Refrigerant control		Electronic Expansion Valve		
Air handling equipment Fan type & Q'ty		Tangential fan ×1		
Motor	**W**	**33×1**		
Starting method		Direct line starting		
Air flow(Standard)	**CMM**	**Hi: 8**		**Hi: 10**
Outside air intake		Not possible		
Air filter, Q'ty		Polypropylene net × 2(Washable)		
Shock & vibration isolator		Rubber sleeve(for fan motor)		
Insulation (noise & heat)		Polyurethane foam		
Operation control Operation switch		**Wired remote control switch (Optional:RC-E3)** **Wireless kit (Optional:RCN-KIT3-E)**		
Room temperature control		Thermostat by electronics		
Safety equipment		Internal thermostat for fan motor. Frost protection thermostat		
Installation data Refrigerant piping size	**mm(in)**	**Liquid line:φ6.35(1/4")** **Gas line:φ9.52(3/8")**		**Liquid line:φ6.35(1/4")** **Gas line:φ12.7(1/2")**
Connecting method		**Flare piping**		
Drain hose		Connectable with VP16(I.D.16mm, O.D.22mm)		
Insulation for piping		Necessary (both Liquid & Gas lines)		
Accessories		**Mounting kit**		
Optional parts		—		

Notes (1) The data are measured at the following conditions.

Item / Operation	Indoor air temperature		Outdoor air temperature		Standards
	DB	WB	DB	WB	
Cooling*1	27℃	19℃	35℃	24℃	ISO-T1
Heating*2	20℃	—	7℃	6℃	

(2) This packaged air-conditioner is manufactured and tested in conformity with the following standard.
ISO-T1 "UNITARY AIR-CONDITIONERS"

Models FDK45KXE6, 56KXE6, 71KXE6

Item / Models		FDK45KXE6	FDK56KXE6	FDK71KXE6
Nominal cooling capacity*	**kW**	**4.5**	**5.6**	**7.1**
Nominal heating capacity*	**kW**	**5.0**	**6.3**	**8.0**
Power source		**1 Phase 220-240V 50Hz/220V 60Hz**		
Noise level	dB(A)	Hi: 41 Me: 39 Lo: 37	Hi: 46 Me: 39 Lo: 37	Hi: 47 Me: 43 Lo: 39
Exterior dimensions Height × Width × Depth	**mm**	**298 × 840 × 259**		**318 × 1098 × 248**
Net weight	**kg**	**12.5**	**13**	**15.5**
Refrigerant equipment Heat exchanger		Louver fin & inner grooved tubing		
Refrigerant control		Electronic Expansion Valve		
Air handling equipment Fan type & Q'ty		Tangential fan ×1		
Motor	**W**	**33×1**		**45×1**
Starting method		Direct line starting		
Air flow(Standard)	**CMM**	**Hi: 11**	**Hi: 14**	**Hi: 21**
Outside air intake		Not possible		
Air filter, Q'ty		Polypropylene net × 2(Washable)		
Shock & vibration isolator		Rubber sleeve(for fan motor)		
Insulation (noise & heat)		Polyurethane foam		
Operation control Operation switch		**Wired remote control switch (Optional:RC-E3)** **Wireless kit (Optional:RCN-KIT3-E)**		
Room temperature control		Thermostat by electronics		
Safety equipment		Internal thermostat for fan motor. Frost protection thermostat		
Installation data Refrigerant piping size	**mm(in)**	**Liquid line:Φ6.35(1/4")** **Gas line:Φ12.7(1/2")**		**Liquid line:Φ9.52(3/8")** **Gas line:Φ15.88(5/8")**
Connecting method		**Flare piping**		
Drain hose		Connectable with VP16(I.D.16mm, O.D.22mm)		
Insulation for piping		Necessary (both Liquid & Gas lines)		
Accessories		**Mounting kit**		
Optional parts		—		

Notes (1) The data are measured at the following conditions.

Item / Operation	Indoor air temperature		Outdoor air temperature		Standards
	DB	WB	DB	WB	
Cooling*1	27℃	19℃	35℃	24℃	ISO-T1
Heating*2	20℃	—	7℃	6℃	

(2) This packaged air-conditioner is manufactured and tested in conformity with the following standard.
ISO-T1 "UNITARY AIR-CONDITIONERS"

(j) Ceiling suspended type (FDE)

Models FDE36KXE6, 45KXE6

Item \ Models		FDE36KXE6	FDE45KXE6
Nominal cooling capacity*1	**kW**	**3.6**	**4.5**
Nominal heating capacity*2	**kW**	**4.0**	**5.0**
Power source		**1 Phase 220-240V 50Hz/220V 60Hz**	
Noise level	dB(A)	Hi: 39 Me: 38 Lo: 36	
Exterior dimensions Height × Width × Depth	**mm**	**210 × 1070 × 690**	
Net weight	**kg**	**30**	
Refrigerant equipment Heat exchanger		Louver fin & inner grooved tubing	
Refrigerant control		Electronic Expansion Valve	
Air handling equipment Fan type & Q'ty		Centrifugal fan × 2	
Motor	**W**	**25 × 1**	
Starting method		Direct line starting	
Air flow(Standard)	**CMM**	**Hi: 11 Me: 9 Lo: 7**	
Outside air intake		Not possible	
Air filter, Q'ty		Pocket plastic net × 2(Washable)	
Shock & vibration isolator		Rubber sleeve (for fan motor)	
Insulation (noise & heat)		Polyurethane foam	
Operation control Operation switch		**Wired remote control switch (Optional:RC-E3)** **Wireless kit (Optional:RCN-KIT3-E)**	
Room temperature control		Thermostat by electronics	
Safety equipment		Internal thermostat for fan motor. Frost protection thermostat	
Installation data Refrigerant piping size	**mm(in)**	**Liquid line:ϕ6.35(1/4"), Gas line:ϕ12.7(1/2")**	
Connecting method		**Flare piping**	
Drain hose		Connectable with VP20(I.D.20mm, O.D.26mm)	
Insulation for piping		Necessary (both Liquid & Gas lines)	
Accessories		**Mounting kit, Drain hose**	
Optional parts		–	

Notes (1) The data are measured at the following conditions.

Item / Operation	Indoor air temperature		Outdoor air temperature		Standards
	DB	WB	DB	WB	
Cooling*1	27℃	19℃	35℃	24℃	ISO-T1
Heating*2	20℃	—	7℃	6℃	

(2) This packaged air-conditioner is manufactured and tested in conformity with the following standard.
ISO-T1 "UNITARY AIR-CONDITIONERS"

Models FDE56KXE6, 71KXE6

Item \ Models		FDE56KXE6	FDE71KXE6
Nominal cooling capacity*1	**kW**	**5.6**	**7.1**
Nominal heating capacity*2	**kW**	**6.3**	**8.0**
Power source		**1 Phase 220-240V 50Hz/220V 60Hz**	
Noise level	dB(A)	Hi: 39 Me: 38 Lo: 36	Hi: 41 Me: 39 Lo: 37
Exterior dimensions Height × Width × Depth	**mm**	**210 × 1070 × 690**	**210 × 1320 × 690**
Net weight	**kg**	**30**	**36**
Refrigerant equipment Heat exchanger		Louver fin & inner grooved tubing	
Refrigerant control		Electronic Expansion Valve	
Air handling equipment Fan type & Q'ty		Centrifugal fan × 2	Centrifugal fan × 4
Motor	**W**	**25×1**	**20×2**
Starting method		Direct line starting	
Air flow(Standard)	**CMM**	**Hi: 11 Me: 9 Lo: 7**	**Hi: 18 Me: 14 Lo: 12**
Outside air intake		Not possible	
Air filter, Q'ty		Pocket plastic net × 2(Washable)	
Shock & vibration isolator		Rubber sleeve(for fan motor)	
Insulation (noise & heat)		Polyurethane foam	
Operation control Operation switch		**Wired remote control switch (Optional:RC-E3) Wireless kit (Optional:RCN-KIT3-E)**	
Room temperature control		Thermostat by electronics	
Safety equipment		Internal thermostat for fan motor. Frost protection thermostat	
Installation data Refrigerant piping size	**mm(in)**	**Liquid line:φ6.35(1/4"), Gas line:φ12.7(1/2")**	**Liquid line:φ9.52(3/8"), Gas line:φ15.88(5/8")**
Connecting method		**Flare piping**	
Drain hose		Connectable with VP20(I.D.20mm, O.D.26mm)	
Insulation for piping		Necessary (both Liquid & Gas lines)	
Accessories		**Mounting kit, Drain hose**	
Optional parts		–	

Notes (1) The data are measured at the following conditions.

Item / Operation	Indoor air temperature		Outdoor air temperature		Standards
	DB	WB	DB	WB	
Cooling*1	27℃	19℃	35℃	24℃	ISO-T1
Heating*2	20℃	—	7℃	6℃	

(2) This packaged air-conditioner is manufactured and tested in conformity with the following standard.
ISO-T1 "UNITARY AIR-CONDITIONERS"

Models FDE112KXE6, 140KXE6

Item \ Models		FDE112KXE6	FDE140KXE6
Nominal cooling capacity*1	**kW**	**11.2**	**14.0**
Nominal heating capacity*2	**kW**	**12.5**	**16.0**
Power source		**1 Phase 220-240V 50Hz/220V 60Hz**	
Noise level	dB(A)	Hi: 44 Me: 41 Lo: 39	Hi: 46 Me: 44 Lo: 43
Exterior dimensions Height × Width × Depth	**mm**	**250 × 1620 × 690**	
Net weight	**kg**	**46**	
Refrigerant equipment Heat exchanger		Louver fin & inner grooved tubing	
Refrigerant control		Electronic Expansion Valve	
Air handling equipment Fan type & Q'ty		Centrifugal fan × 4	
Motor	**W**	**30×2**	**40×2**
Starting method		Direct line starting	
Air flow(Standard)	**CMM**	**Hi: 26 Me: 23 Lo: 21**	**Hi: 29 Me: 26 Lo: 23**
Outside air intake		Not possible	
Air filter, Q'ty		Pocket plastic net × 2(Washable)	
Shock & vibration isolator		Rubber sleeve(for fan motor)	
Insulation (noise & heat)		Polyurethane foam	
Operation control Operation switch		**Wired remote control switch (Optional:RC-E3) Wireless kit (Optional:RCN-KIT3-E)**	
Room temperature control		Thermostat by electronics	
Safety equipment		Internal thermostat for fan motor. Frost protection thermostat	
Installation data Refrigerant piping size	**mm(in)**	**Liquid line:ϕ9.52(3/8"), Gas line:ϕ15.88(5/8")**	
Connecting method		**Flare piping**	
Drain hose		Connectable with VP20(I.D.20mm, O.D.26mm)	
Insulation for piping		Necessary (both Liquid & Gas lines)	
Accessories		**Mounting kit, Drain hose**	
Optional parts		–	

Notes (1) The data are measured at the following conditions.

Item / Operation	Indoor air temperature		Outdoor air temperature		Standards
	DB	WB	DB	WB	
Cooling*1	27℃	19℃	35℃	24℃	ISO-T1
Heating*2	20℃	—	7℃	6℃	

(2) This packaged air-conditioner is manufactured and tested in conformity with the following standard.
ISO-T1 "UNITARY AIR-CONDITIONERS"

(k) Floor standing (with casing) type [FDFL]

Models FDFL28KXE6, 45KXE6, 71KXE6

Item \ Models		FDFL28KXE6	FDFL45KXE6	FDFL71KXE6
Nominal cooling capacity*1	**kW**	**2.8**	**4.5**	**7.1**
Nominal heating capacity*2	**kW**	**3.2**	**5.0**	**8.0**
Power source		**1 Phase 220-240V 50Hz**		
Noise level	dB(A)	Hi: 41 Me:38 Lo: 36	Hi: 43 Me:41 Lo: 40	
Exterior dimensions Height × Width × Depth	**mm**	**630 × 1196 ×225**		**630 × 1481 ×225**
Net weight	**kg**	**32**		**40**
Refrigerant equipment Heat exchanger		Louver fin & inner grooved tubing		
Refrigerant control		Electronic Expansion Valve		
Air handling equipment Fan type & Q'ty		Centrifugal fan × 2		
Motor	**W**	**30×1**	**40×1**	
Starting method		Direct line starting		
Air flow(Standard)	**CMM**	**Hi: 12 Me: 11 Lo: 10**	**Hi: 14 Me: 12 Lo: 10**	**Hi: 18 Me: 15 Lo: 12**
Outside air intake		Not possible		
Air filter, Q'ty		Polypropylene net ×2(Washable)		
Shock & vibration isolator		Rubber sleeve(for fan motor)		
Insulation (noise & heat)		Polyurethane foam		
Operation control Operation switch		**Wired remote control switch (Optional:RC-E3)** **Wireless kit (Optional:RCN-KIT3-E)**		
Room temperature control		Thermostat by electronics		
Safety equipment		Internal thermostat for fan motor. Frost protection thermostat		
Installation data Refrigerant piping size	**mm(in)**	**Liquid line:ϕ 6.35(1/4")** **Gas line:ϕ9.52(3/8")**	**Liquid line:ϕ 6.35(1/4")** **Gas line:ϕ12.7(1/2")**	**Liquid line:ϕ9.52(3/8")** **Gas line:ϕ15.88(5/8")**
Connecting method		**Flare piping**		
Drain hose		Connectable with PT20A		
Insulation for piping		Necessary (both Liquid & Gas lines)		
Accessories		**Mounting kit, Drain hose**		
Optional parts		–		

Notes (1) The data are measured at the following conditions.

Item / Operation	Indoor air temperature		Outdoor air temperature		Standards
	DB	WB	DB	WB	
Cooling*1	27℃	19℃	35℃	24℃	ISO-T1
Heating*2	20℃	—	7℃	6℃	

(2) This packaged air-conditioner is manufactured and tested in conformity with the following standard.
ISO-T1 "UNITARY AIR-CONDITIONERS"

(I) Floor standing (without casing) type [FDFU]

Models FDFU28KXE6, 45KXE6, 56KXE6, 71KXE6

Item \ Models		FDFU28KXE6	FDFU45KXE6	FDFU56KXE6	FDFU71KXE6
Nominal cooling capacity*1	**kW**	**2.8**	**4.5**	**5.6**	**7.1**
Nominal heating capacity*2	**kW**	**3.2**	**5.0**	**6.3**	**8.0**
Power source		**1 Phase 220-240V 50Hz**			
Noise level	dB(A)	Hi: 41 Me:38 Lo: 36	Hi: 43 Me:41 Lo: 40		
Exterior dimensions Height × Width × Depth	**mm**	**630 × 1077 × 225**			**630 × 1362 × 225**
Net weight	**kg**	**25**			**32**
Refrigerant equipment Heat exchanger		Louver fin & inner grooved tubing			
Refrigerant control		Electronic Expansion Valve			
Air handling equipment Fan type & Q'ty		Centrifugal fan × 2			
Motor	**W**	**30 × 1**	**40 × 1**		
Starting method		Direct line starting			
Air flow(Standard)	**CMM**	**Hi: 12 Me: 11 Lo: 10**	**Hi: 14 Me: 12 Lo: 10**		**Hi: 18 Me: 15 Lo: 12**
Outside air intake		Not possible			
Air filter, Q'ty		Polypropylene net × 2(Washable)			
Shock & vibration isolator		Rubber sleeve(for fan motor)			
Insulation (noise & heat)		Polyurethane foam			
Operation control Operation switch		**Wired remote control switch (Optional:RC-E3)** **Wireless kit (Optional:RCN-KIT3-E)**			
Room temperature control		Thermostat by electronics			
Safety equipment		Internal thermostat for fan motor. Frost protection thermostat			
Installation data Refrigerant piping size	**mm(in)**	**Liquid line:ϕ6.35(1/4")** **Gas line: ϕ9.52(3/8")**	**Liquid line: ϕ6.35(1/4")** **Gas line: ϕ12.7(1/2")**		**Liquid line:ϕ9.52(3/8")** **Gas line:ϕ15.88(5/8")**
Connecting method		**Flare piping**			
Drain hose		Connectable with PT20A			
Insulation for piping		Necessary (both Liquid & Gas lines)			
Accessories		**Mounting kit, Drain hose**			
Optional parts		–			

Notes (1) The data are measured at the following conditions.

Item / Operation	Indoor air temperature		Outdoor air temperature		Standards
	DB	WB	DB	WB	
Cooling*1	27℃	19℃	35℃	24℃	ISO-T1
Heating*2	20℃	—	7℃	6℃	

(2) This packaged air-conditioner is manufactured and tested in conformity with the following standard.
ISO-T1 "UNITARY AIR-CONDITIONERS"

3.2 Exterior dimensions

(1) Indoor unit

(a) Ceiling cassette-4 way type (FDT)

Models FDT28KXE6, 36KXE6, 45KXE6, 56KXE6, 71KXE6

Unit:mm

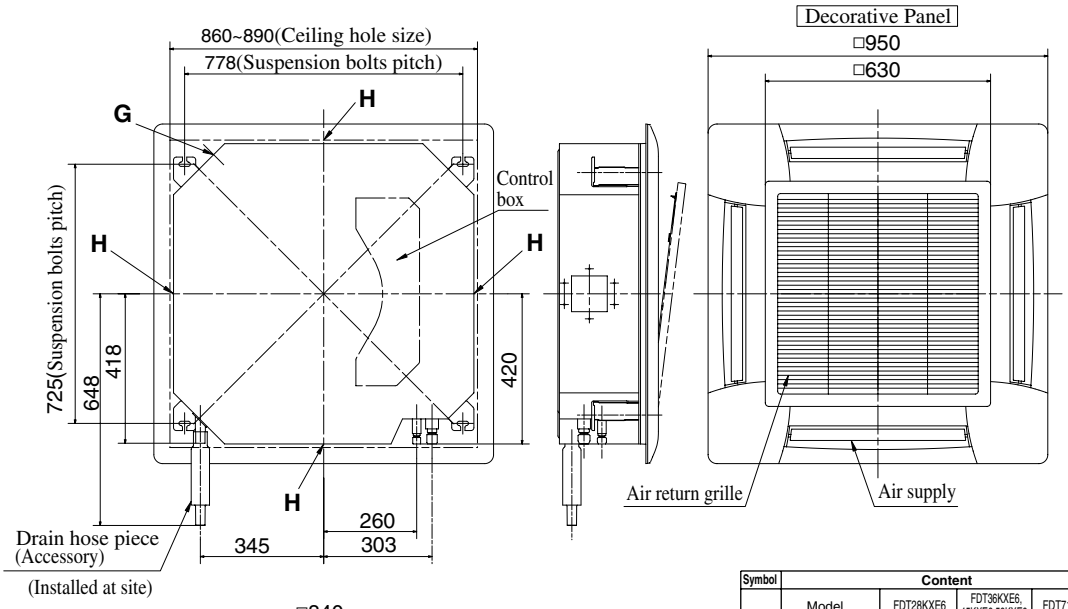

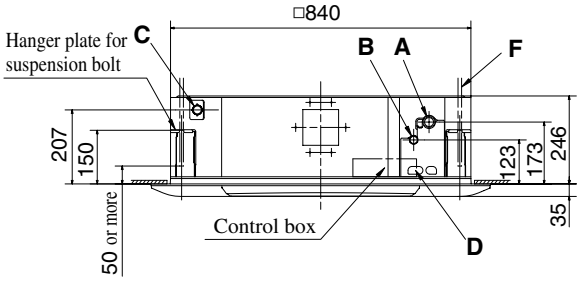

Symbol	Content			
	Model	FDT28KXE6	FDT36KXE6, 45KXE6,56KXE6	FDT71KXE6
A	Gas piping	φ9.52(3/8")(Flare)	φ12.7(1/2")(Flare)	φ15.88(5/8")(Flare)
B	Liquid piping	φ6.35(1/4")(Flare)		φ9.52(3/8")(Flare)
C	Drain piping	VP20 Note (2)		
D	Hole for wiring			
F	Suspension bolts	(M10 or M8)		
G	Outside air opening for ducting	(Knock out)		
H	Air outlet opening for ducting	(Knock out)		

Note (1) The model name label is attached inside the air return grille.

(2) Prepare the connecting socket (VP20) on site.

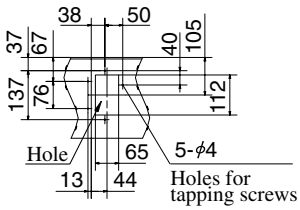

VIEW G

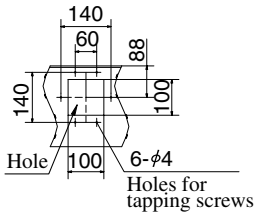

VIEW H

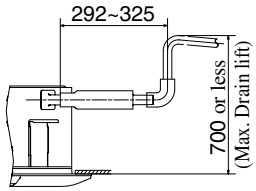

Space for installation and service

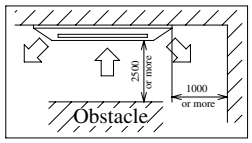

Make a space of 4000 or more between the units when installing more than one.

Models FDT90KXE6, 112KXE6, 140KXE6, 160KXE6

Unit:mm

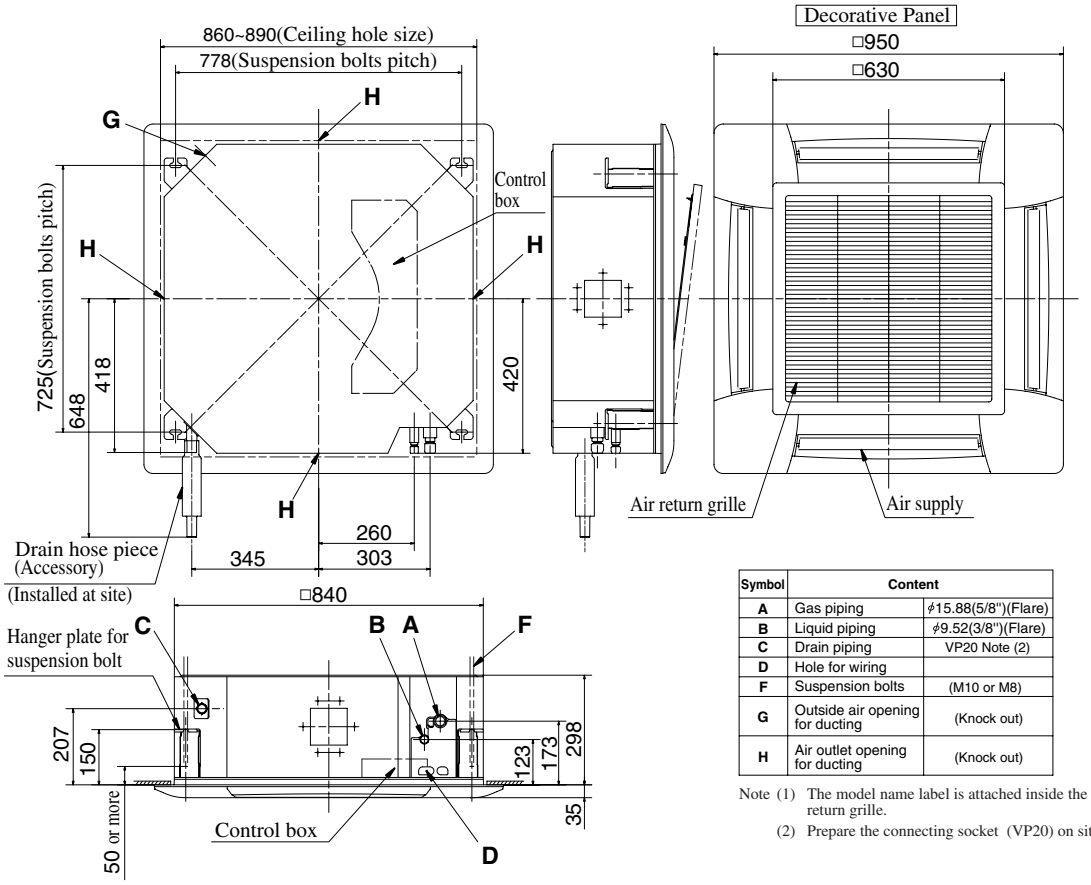

Symbol	Content	
A	Gas piping	ϕ15.88(5/8")(Flare)
B	Liquid piping	ϕ9.52(3/8")(Flare)
C	Drain piping	VP20 Note (2)
D	Hole for wiring	
F	Suspension bolts	(M10 or M8)
G	Outside air opening for ducting	(Knock out)
H	Air outlet opening for ducting	(Knock out)

Note (1) The model name label is attached inside the air return grille.
(2) Prepare the connecting socket (VP20) on site.

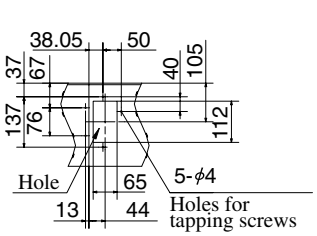

VIEW G

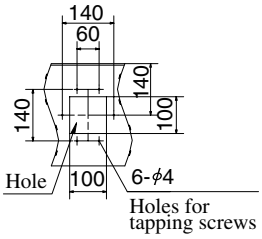

VIEW H

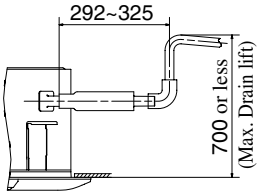

Space for installation and service

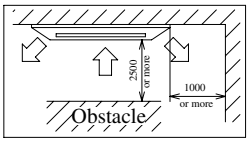

Make a space of 5000 or more between the units when installing more than one.

(b) Ceiling cassette-4 way type (FDTC)

Models FDTC22KXE6, 28KXE6, 36KXE6, 45KXE6, 56KXE6

Unit:mm

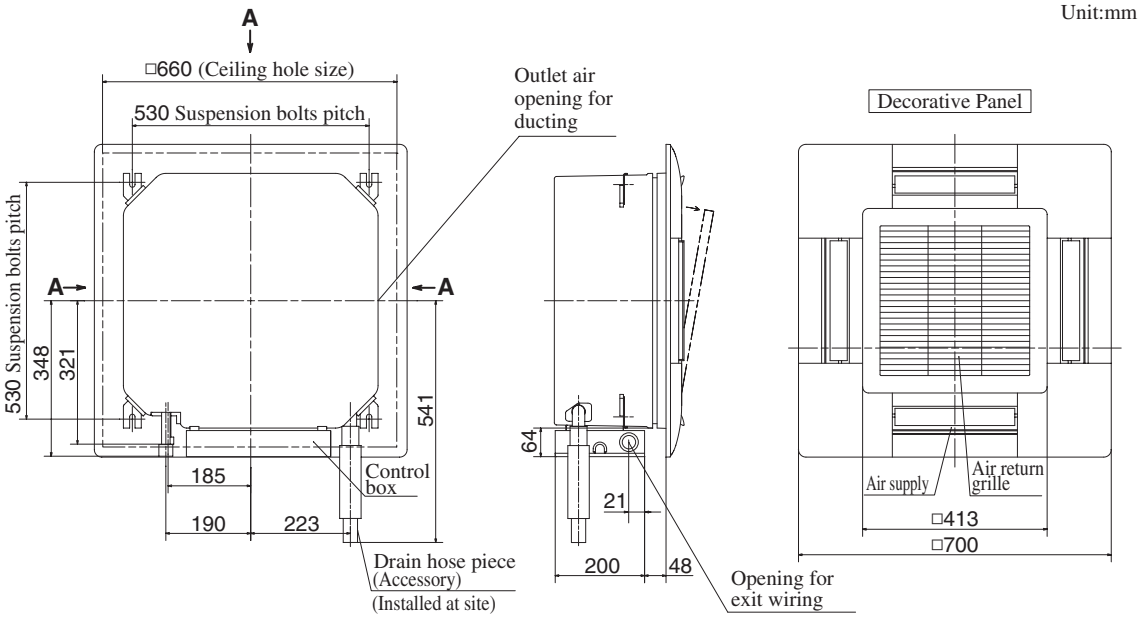

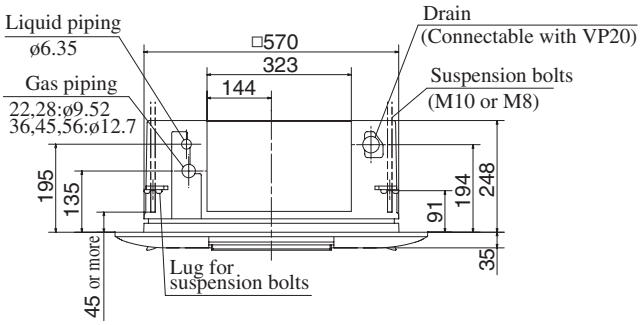

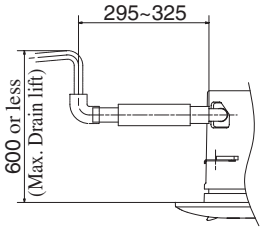

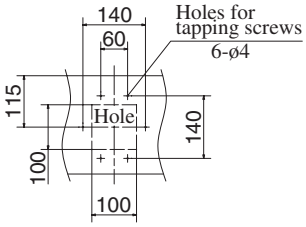

VIEW A

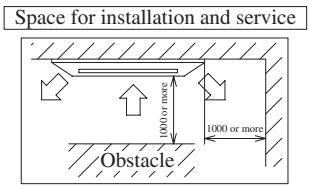

Make a space of 4000 or more between the units when installing more than one.

Note (1) The model name label is attached on the control box lid inside the air return grille.
(2) Prepare the connecting socket (VP20) on site.
(3) This unit is designed for 2×2 grid ceiling.
If it installed on a ceiling other than 2×2 grid ceiling, provide on inspection port on the control box side.

(c) Ceiling cassette-2 way type (FDTW)

Models FDTW28KXE6, 45KXE6, 56KXE6

Unit : mm

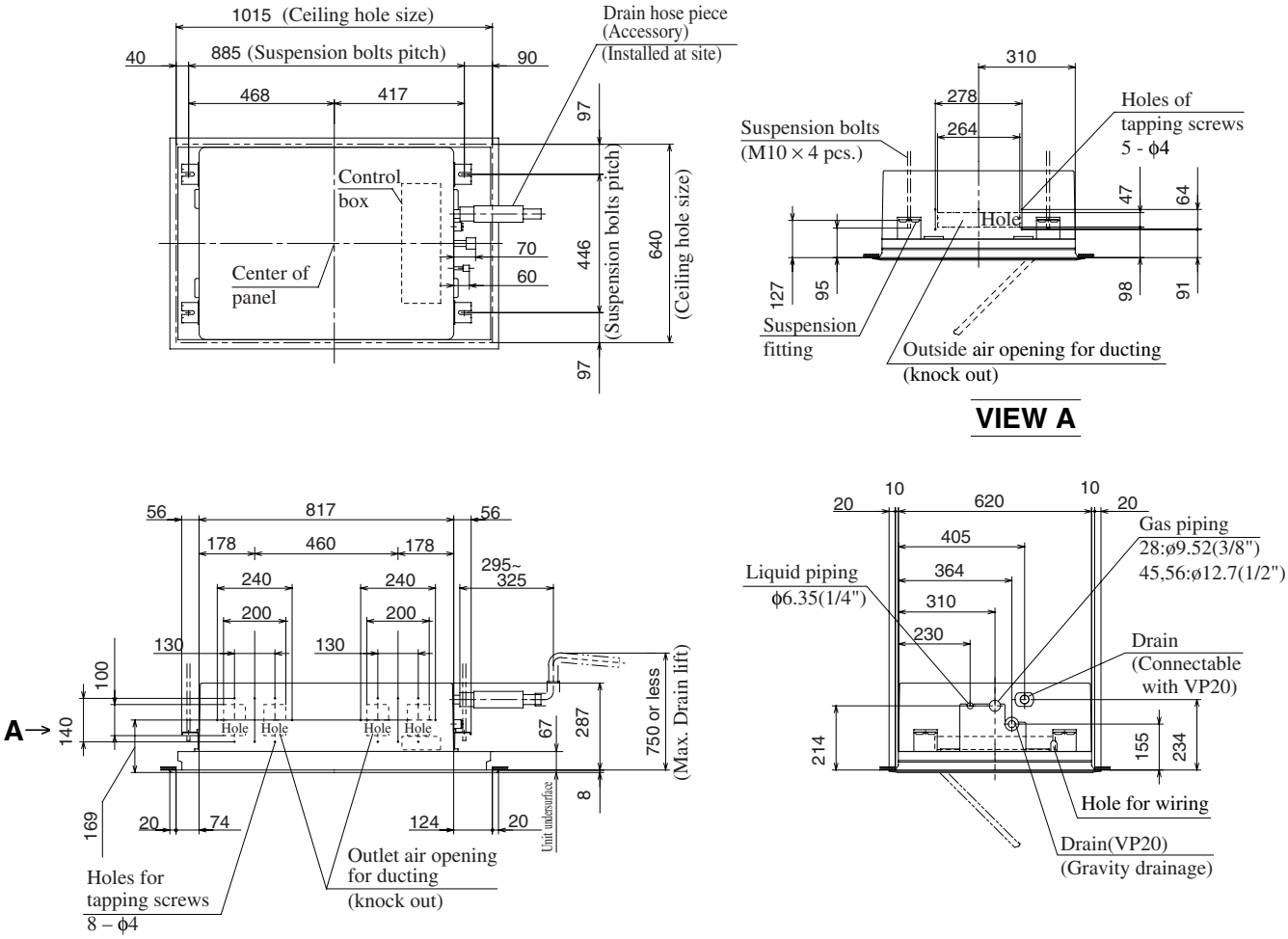

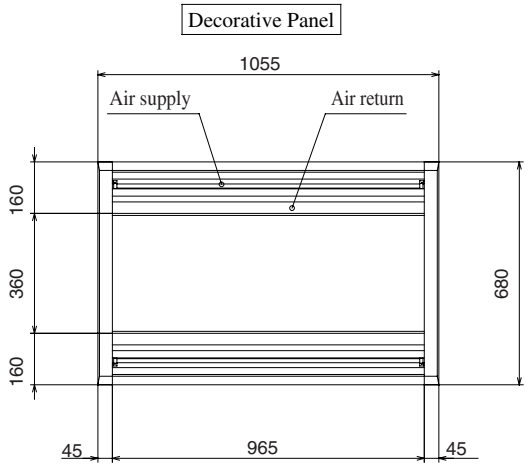

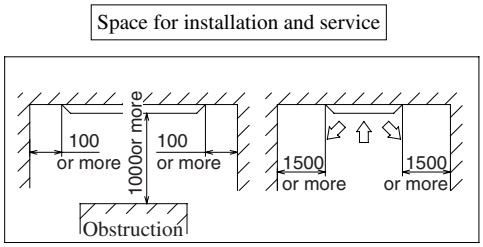

Make a space of 4000 or more between the units when installing more than one.

Note (1) The model name label is attached on the lid of the control box.
(2) Prepare the connecting socket (VP20) on site.

Models FDTW71KXE6, 90KXE6

Unit : mm

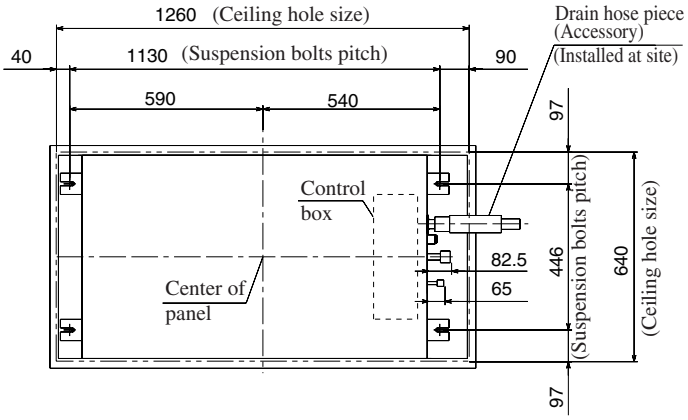

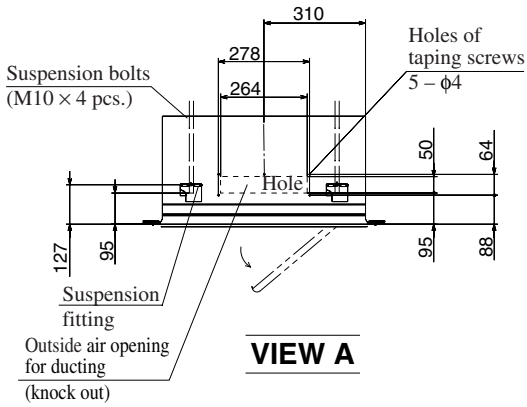

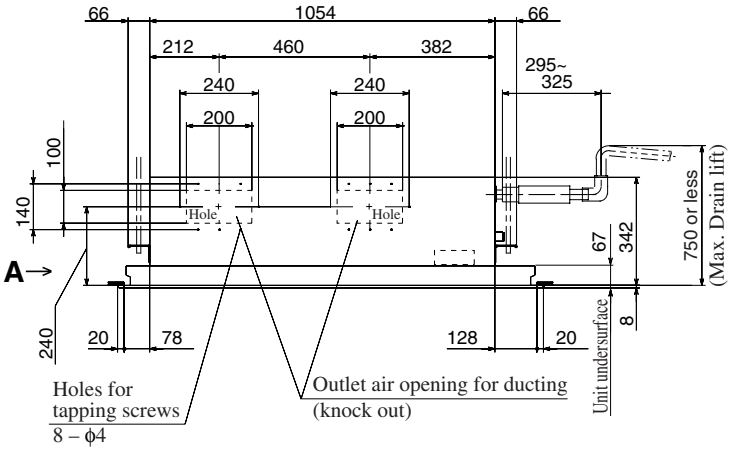

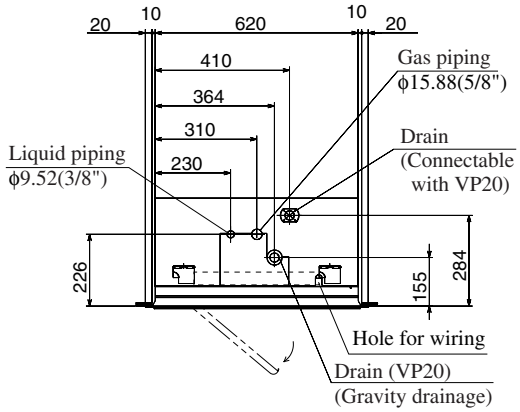

Decorative Panel

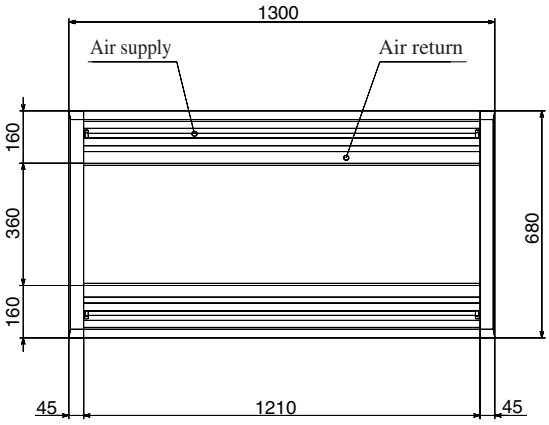

Space for installation and service

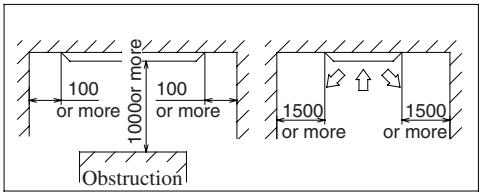

Make a space of 4500 or more between the units when installing more than one.

Note (1) The model name label is attached on the lid of the control box.
(2) Prepare the connecting socket (VP20) on site.

Models FDTW112KXE6, 140KXE6

Unit: mm

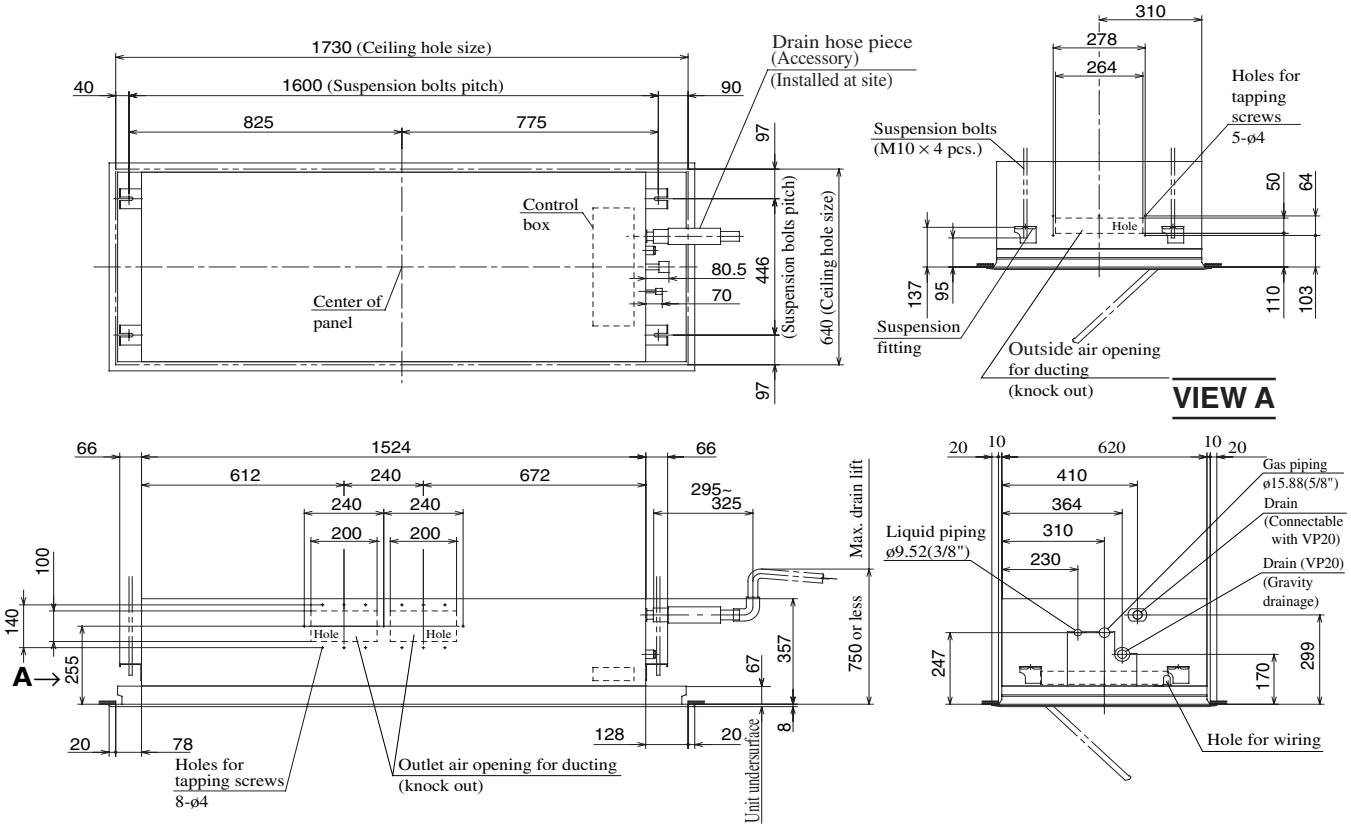

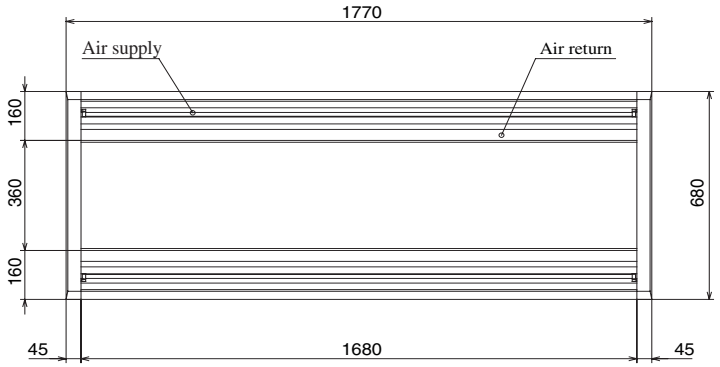

Decorative Panel

Space for installation and service

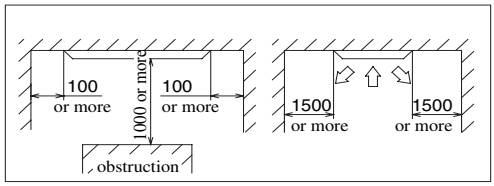

Make a space of 5000 or more between the units when installing more than one.

Note (1) The model name label is attached on the lid of the control box.
(2) Prepare the connecting socket (VP20) on site.

(d) Ceiling cassette-1 way type (FDTS)

Model FDTS45KXE6

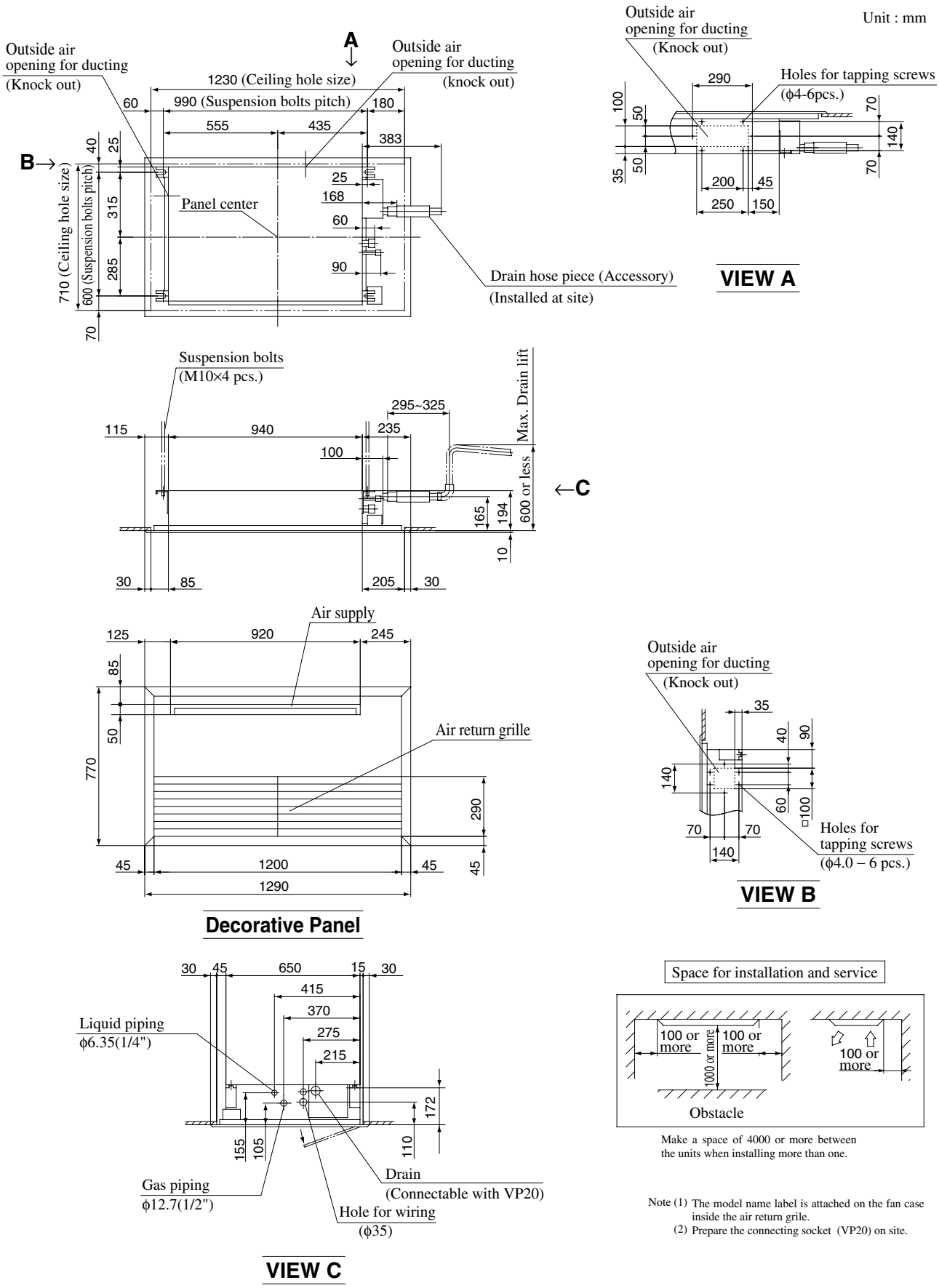

Model FDTS71KXE6

Unit : mm

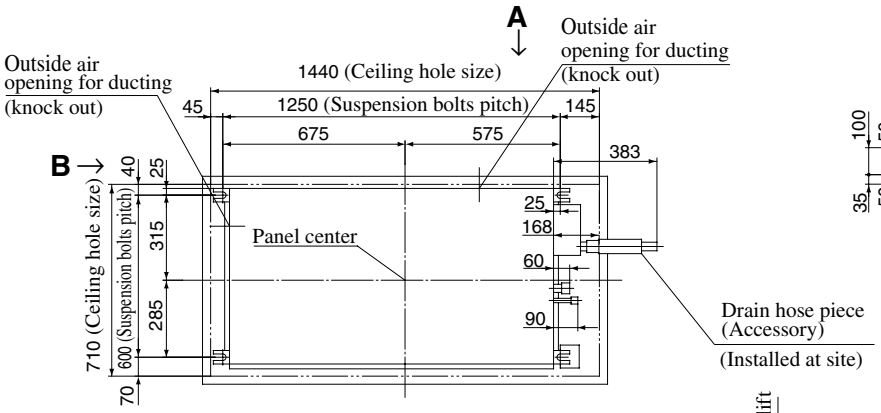

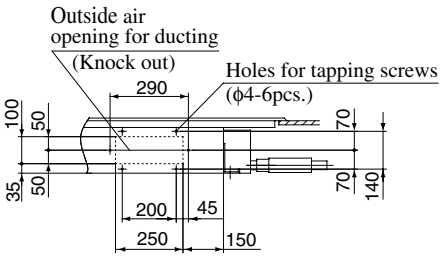

VIEW A

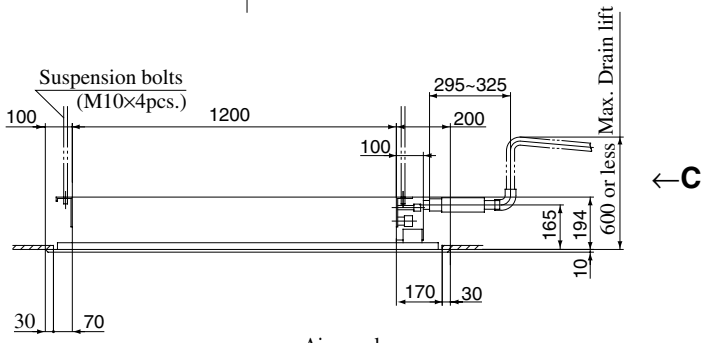

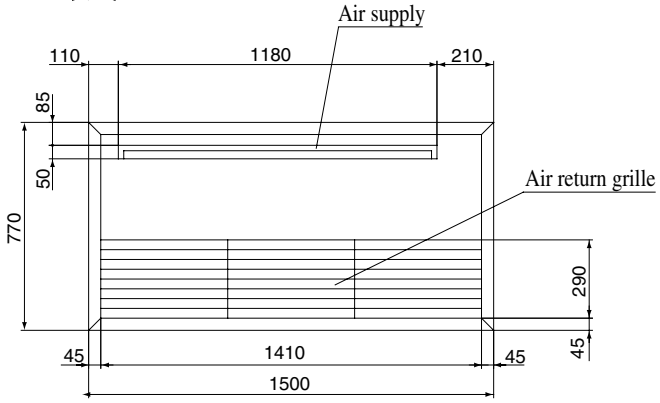

Decorative Panel

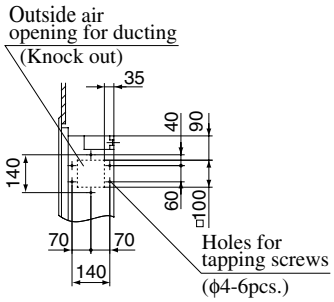

VIEW B

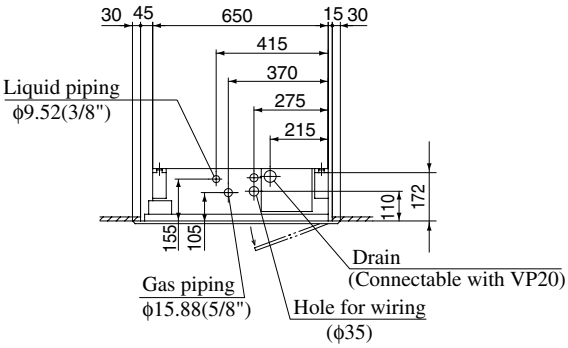

VIEW C

Space for installation and service

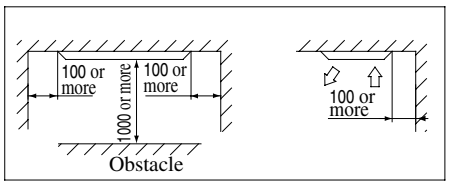

Make a space of 4000 or more between the units when installing more than one.

Note (1) The model name label is attached on the fan case inside the air return grille.
(2) Prepare the connecting socket (VP20) on site.

(e) Ceiling cassette-1 way compact type (FDTQ)

Models FDTQ22KXE6, 28KXE6, 36KXE6

Direct blow panel (TQ-PSA-15W-E)

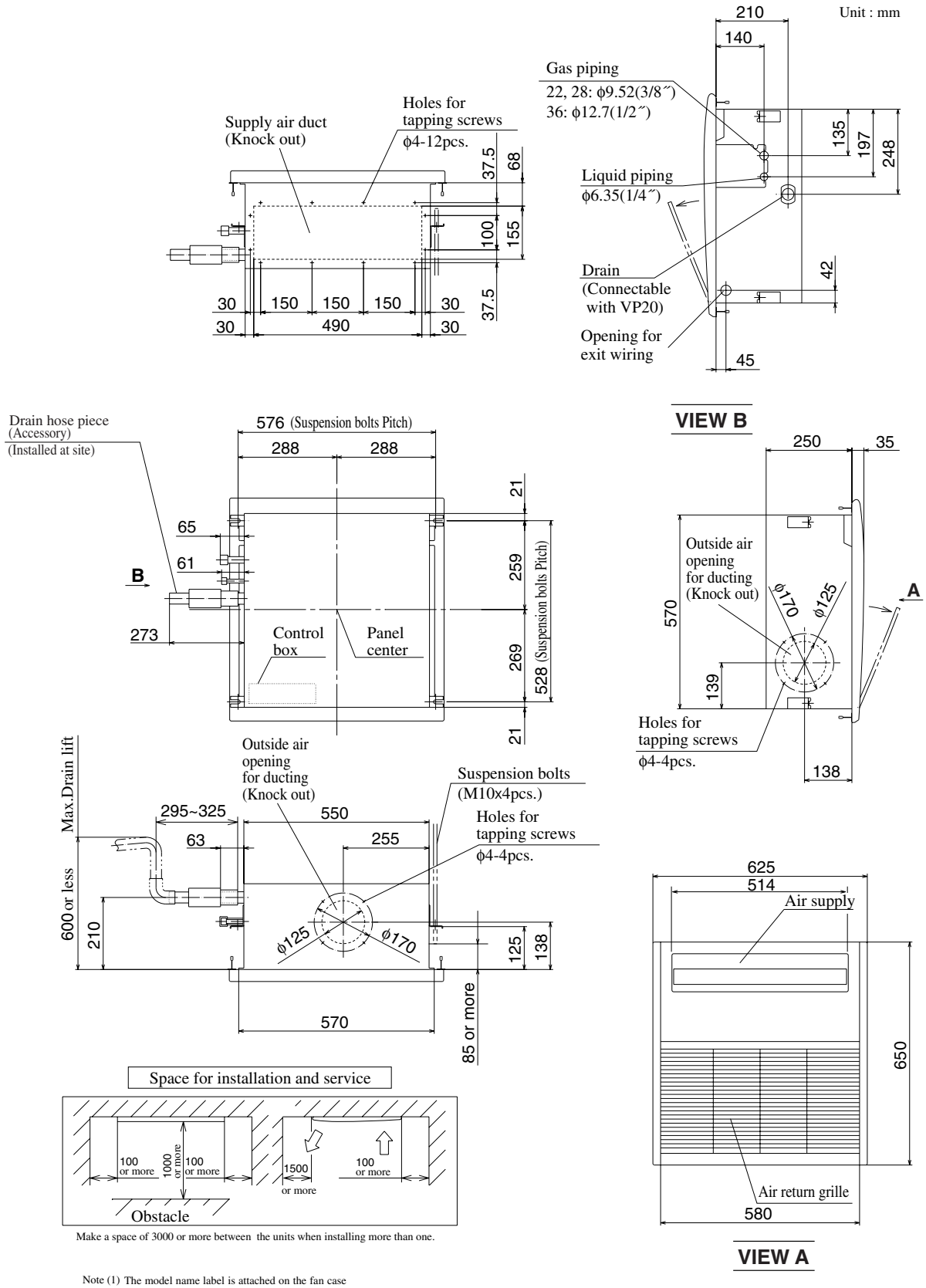

Note (1) The model name label is attached on the fan case inside the air return grille.
(2) Prepare the connecting socket (VP20) on site.
(3) This unit is designed for 2×2 grid ceiling.

Models FDTQ22KXE6, 28KXE6, 36KXE6

Direct blow panel (TQ-PSB-15W-E)

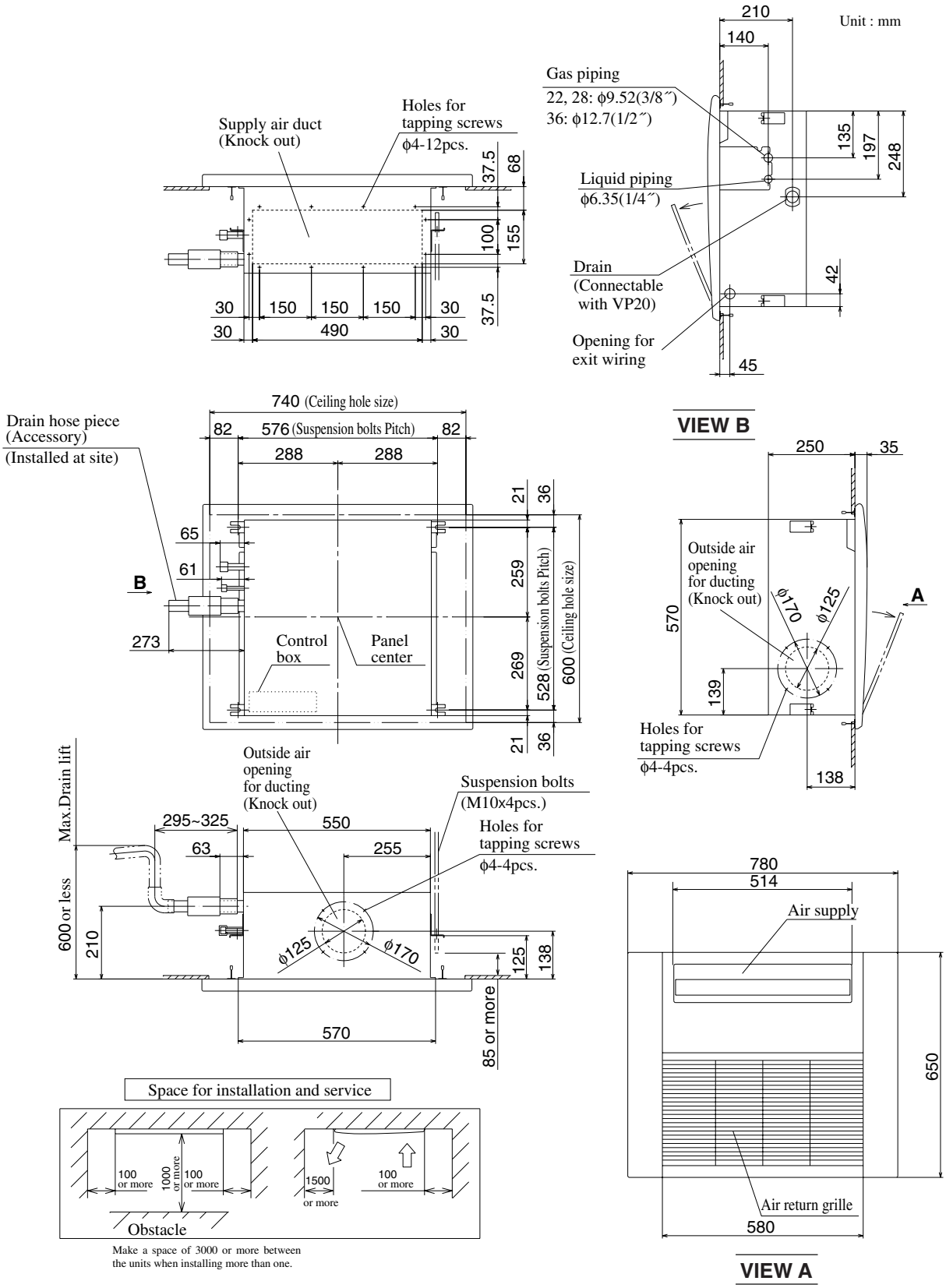

Make a space of 3000 or more between
the units when installing more than one.

Note (1) The model name label is attached on the fan case
inside the air return grille.
(2) Prepare the connecting socket (VP20) on site.

- **When modified to the Duct panel type on site.**

Models FDTQ22KXE6, 28KXE6 36KXE6

Duct panel (QR-PNA-14W-ER)

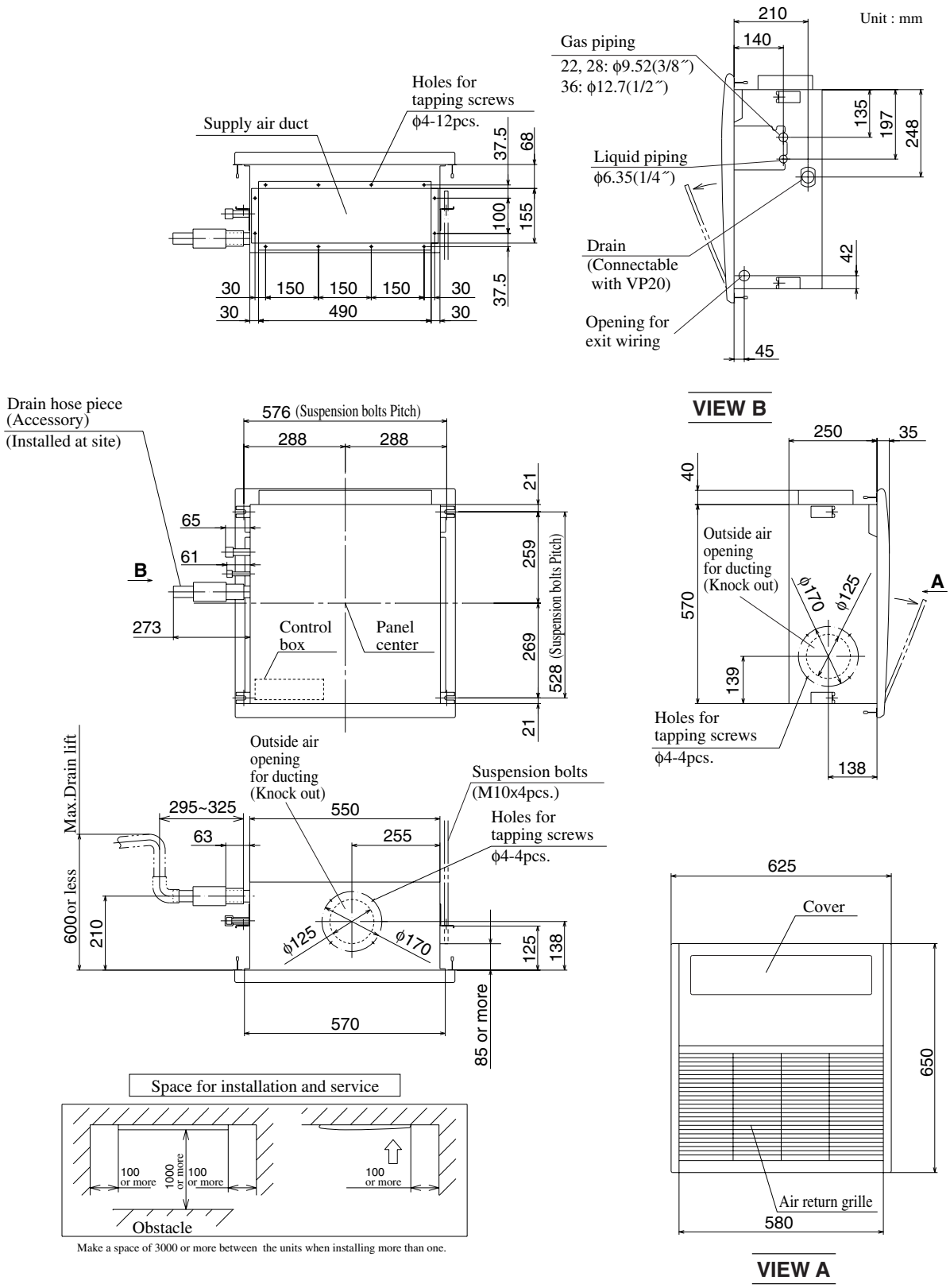

Make a space of 3000 or more between the units when installing more than one.

Note (1) The model name label is attached on the fan case inside the air return grille.
(2) Prepare the connecting socket (VP20) on site.
(3) This unit is designed for 2×2 grid ceiling.

- **When modified to the Duct Cassetteria type on site.**

Models FDTQ22KXE6, 28KXE6, 36KXE6

Duct panel (QR-PNB-14W-ER)

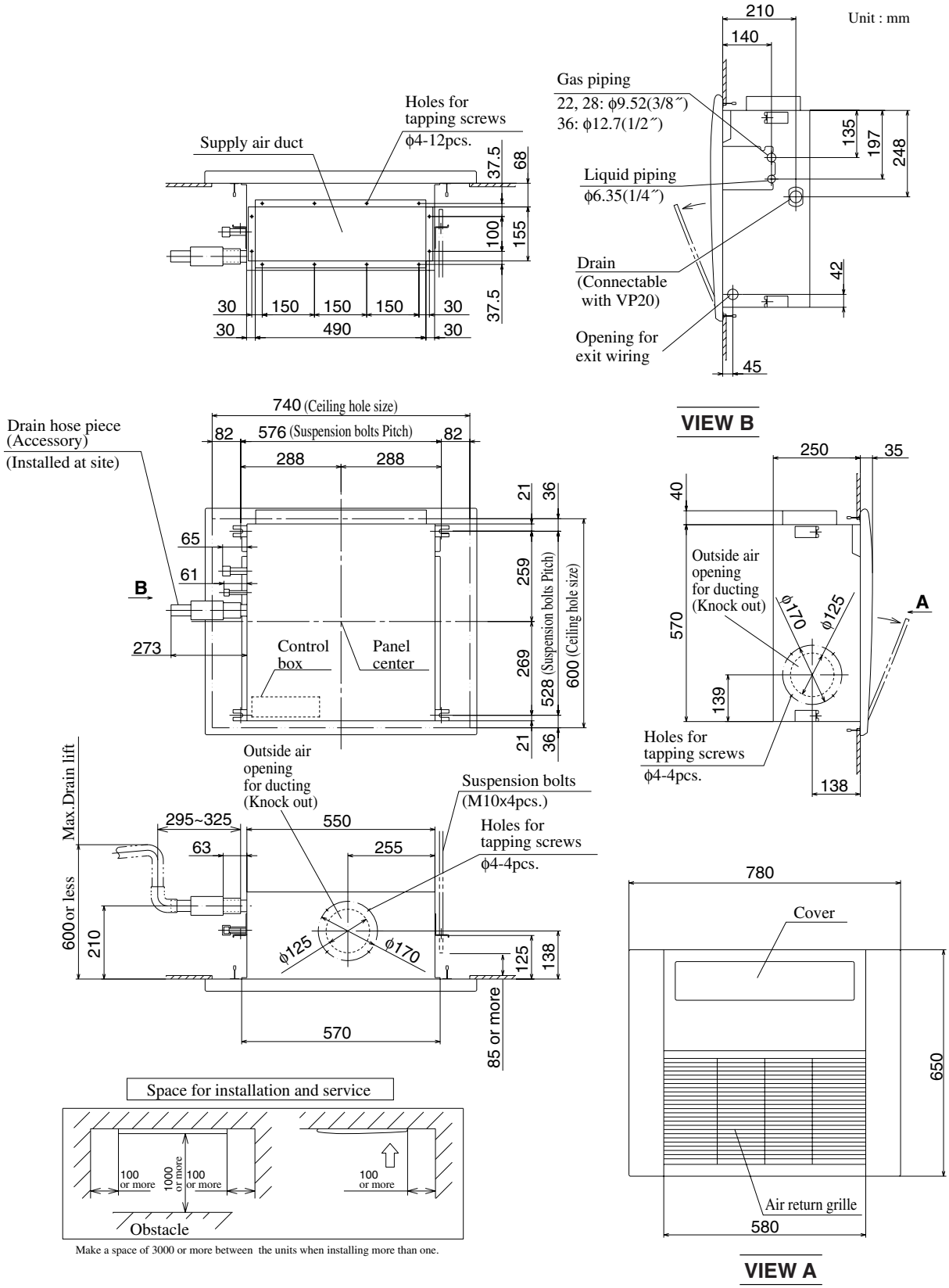

Make a space of 3000 or more between the units when installing more than one.

Note (1) The model name label is attached on the fan case inside the air return grille.
(2) Prepare the connecting socket (VP20) on site.

(f) Duct connected-High static pressure type (FDU)

Model FDU71KXE6

Unit:mm

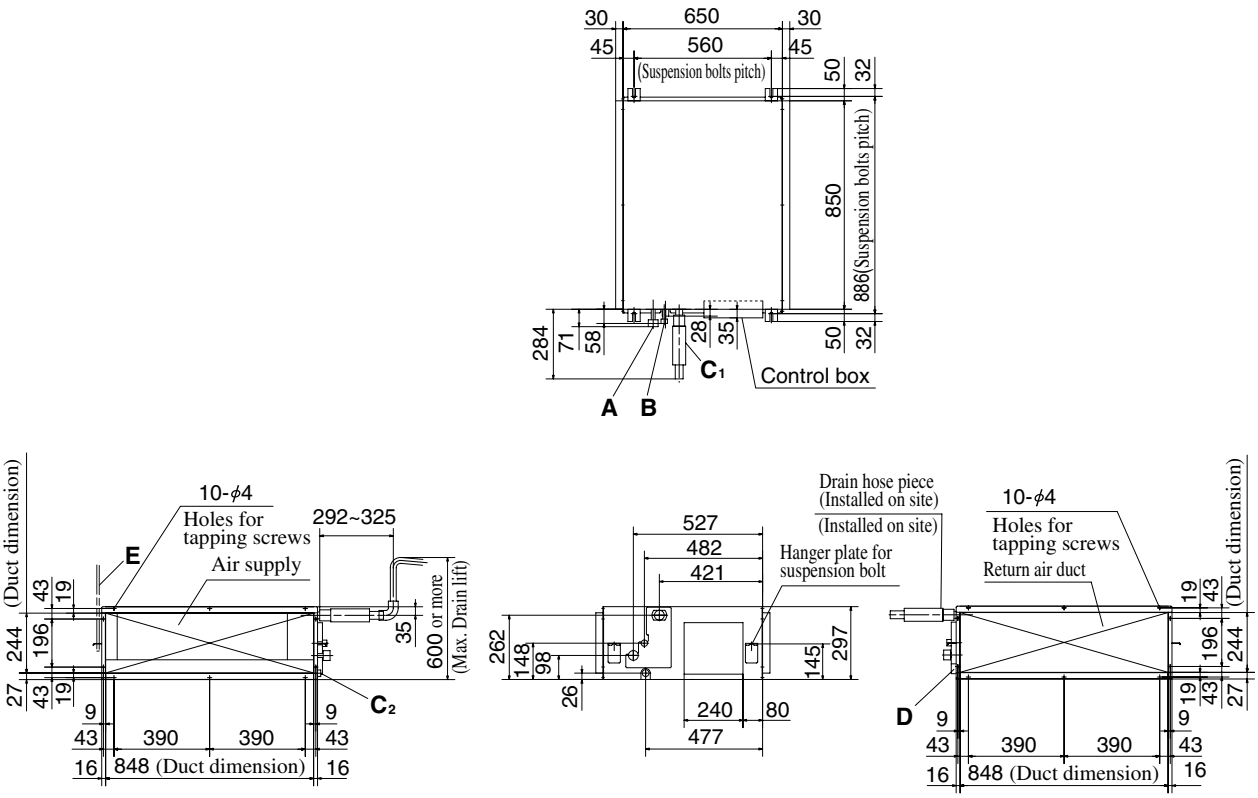

Space for installation and service

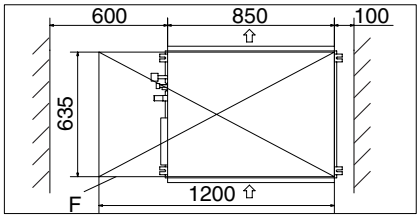

Symbol	Content	
A	Gas piping	φ15.88(5/8")(Flare)
B	Liquid piping	φ9.52(3/8")(Flare)
C1	Drain piping	VP20 Note (2)
C2	Drain piping (Gravity drainage)	VP20
D	Hole for wiring	
E	Suspension bolts	(M10)
F	Inspection hole	(635X1200)

Note (1) The model name label is attached on the lid of the control box.
(2) Prepare the connecting socket (VP20) on site.

Models FDU90KXE6, 112KXE6, 140KXE6

Unit:mm

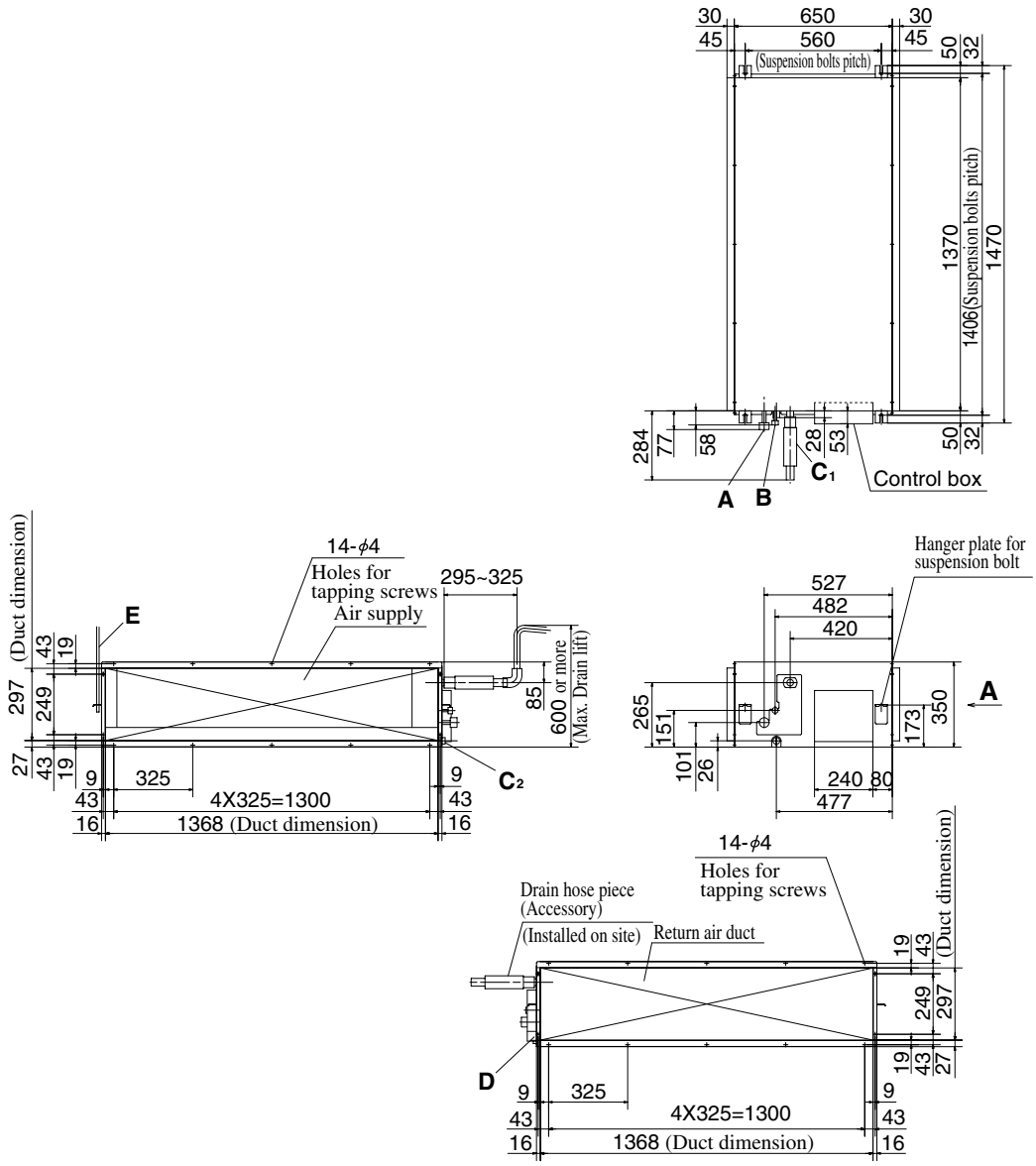

VIEW A

Space for installation and service

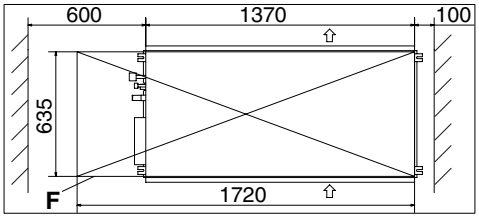

Symbol	Content	
A	Gas piping	φ15.88(5/8")(Flare)
B	Liquid piping	φ9.52(3/8")(Flare)
C_1	Drain piping	VP20 Note (2)
C_2	Drain piping (Gravity drainage)	VP20
D	Hole for wiring	
E	Suspension bolts	(M10)
F	Inspection hole	(635X1200)

Note (1) The model name label is attached on the lid of the control box.
(2) Prepare the connecting socket (VP20) on site.

(g) Duct connected-Low/Middle static pressure type (FDUM)

Models FDUM22KXE6

Unit:mm

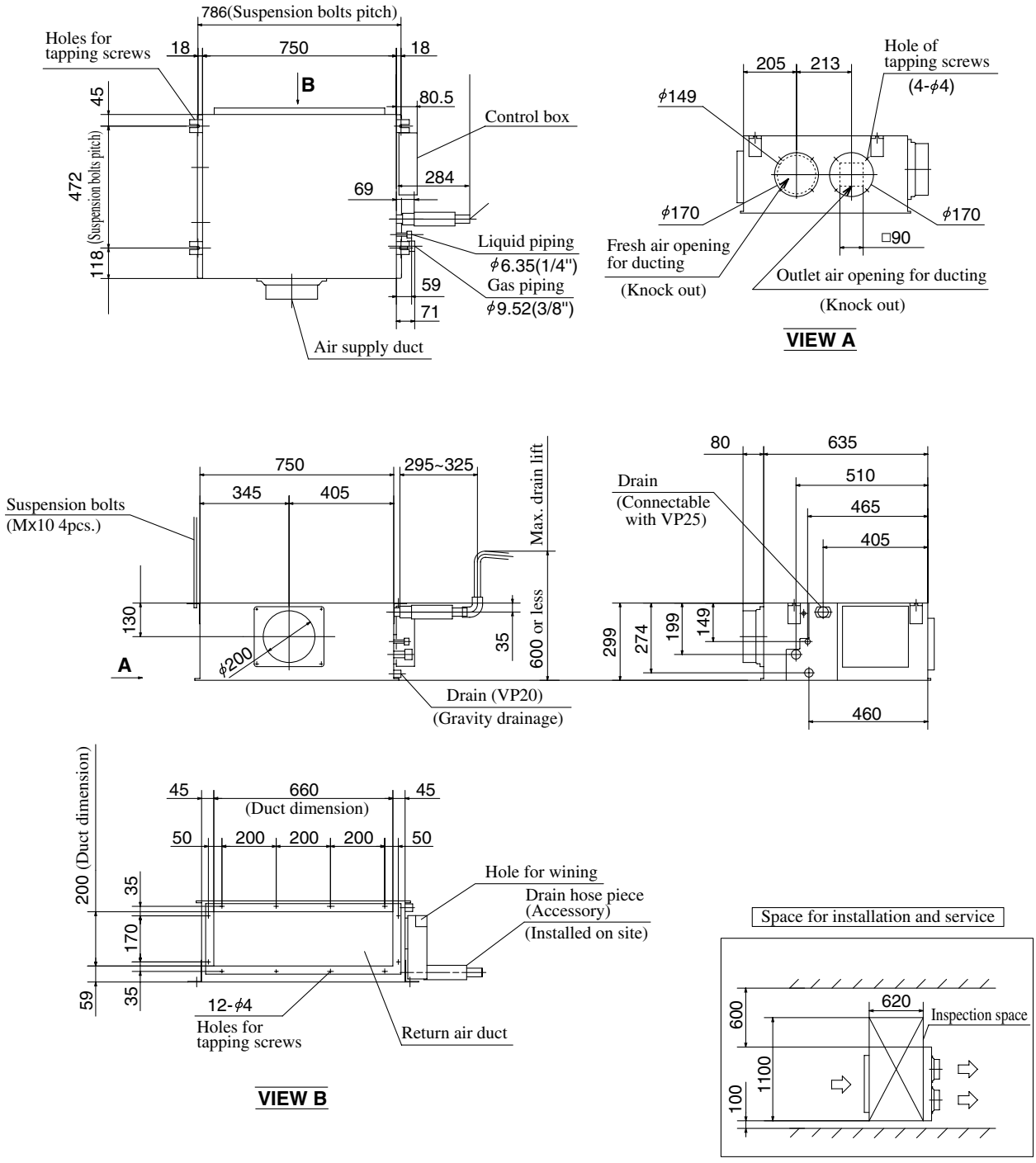

Note (1) The model name label is attached on the lid of the control box.
(2) Prepare the connecting socket (VP20) on site.

Models FDUM28KXE6, 36KXE6, 45KXE6, 56KXE6

Unit:mm

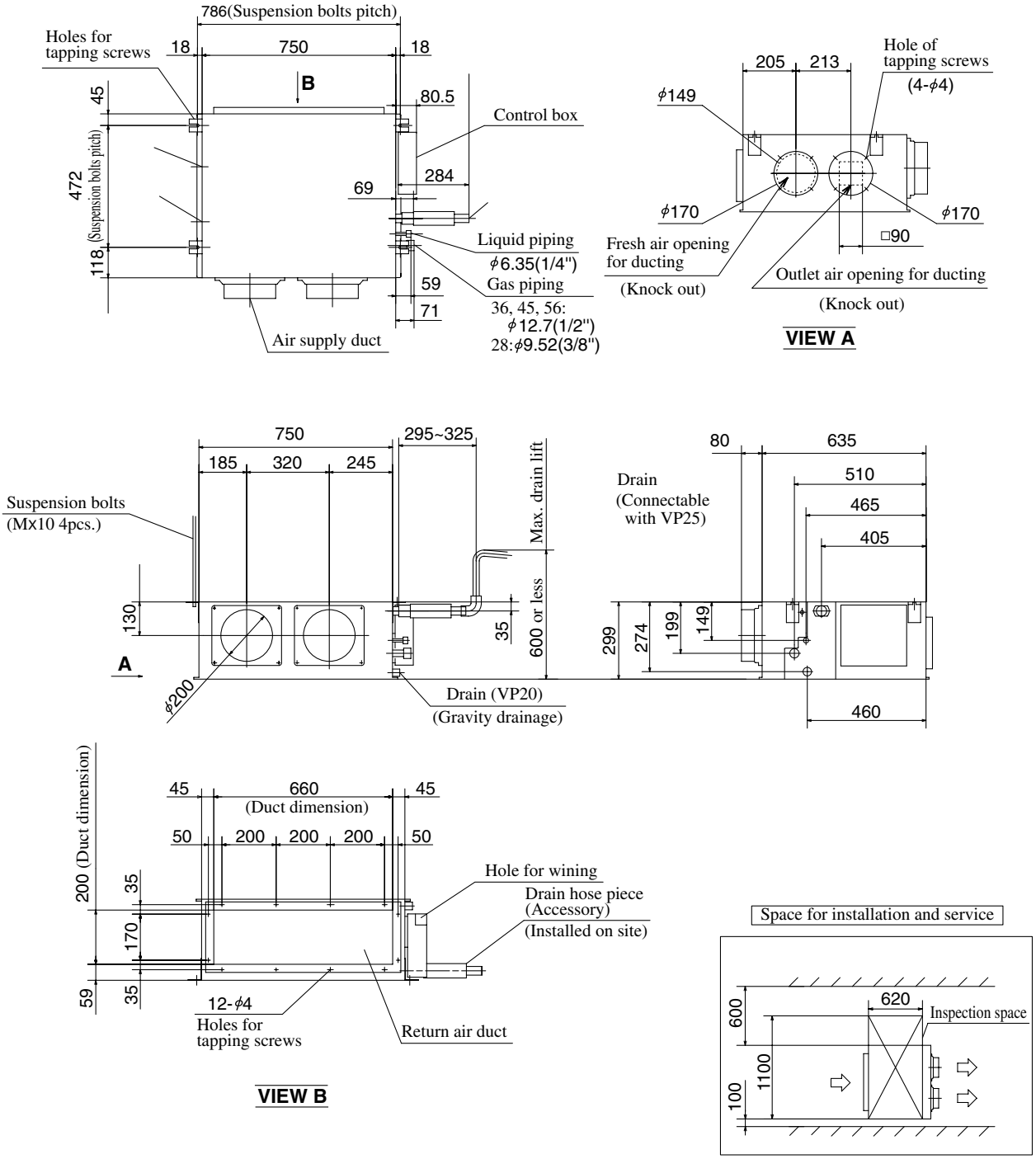

Note (1) The model name label is attached on the lid of the control box.
(2) Prepare the connecting socket (VP20) on site.

Models FDUM71KXE6, 90KXE6,

Unit:mm

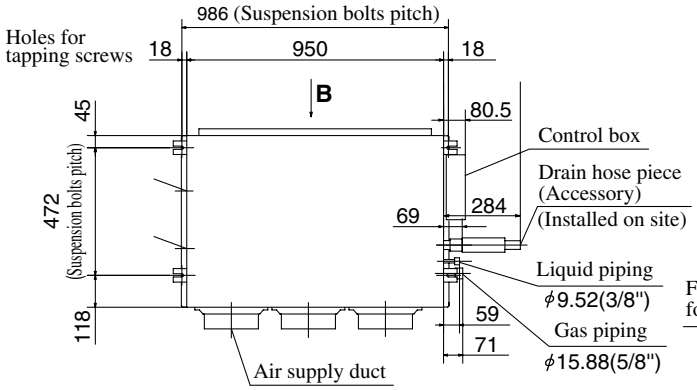

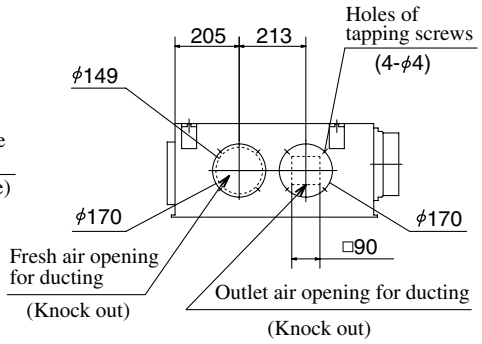

VIEW A

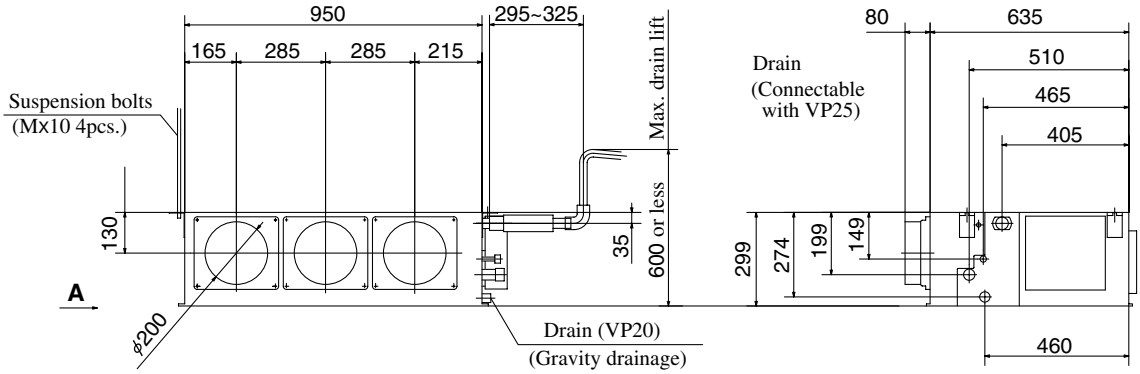

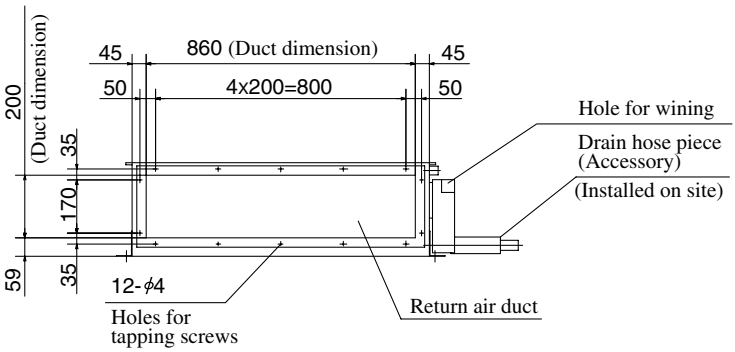

VIEW B

Space for installation and service

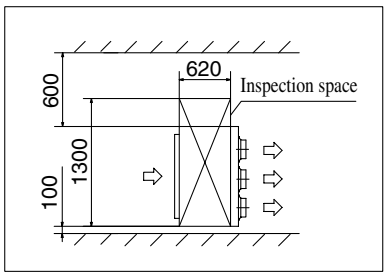

Note (1) The model name label is attached on the lid of the control box.
(2) Prepare the connecting socket (VP20) on site.

Models FDUM112KXE6, 140KXE6,

Unit:mm

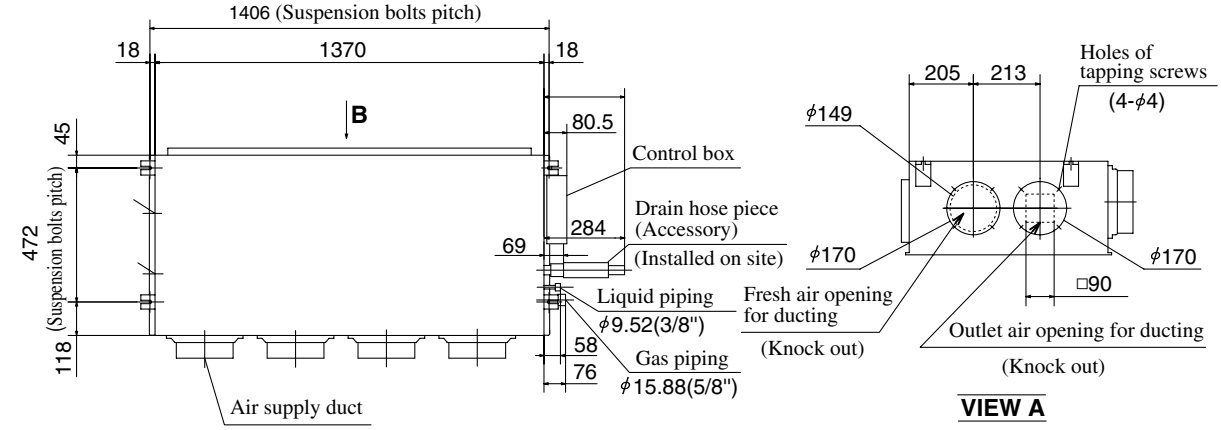

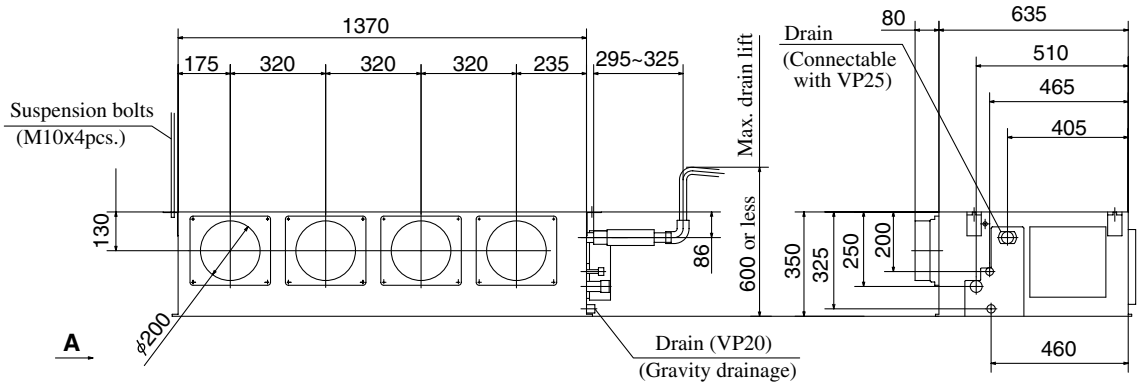

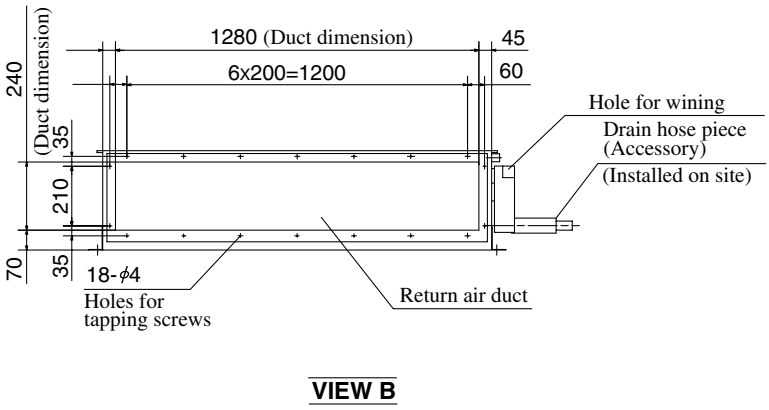

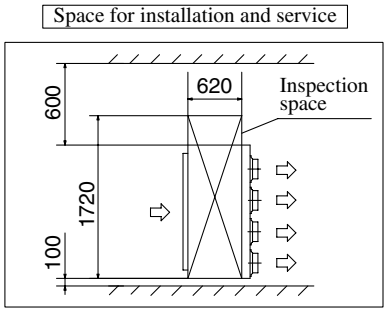

Note (1) The model name label is attached on the lid of the control box.
(2) Prepare the connecting socket (VP20) on site.

(h) Duct connected (Ultra thin)-Low static pressure type (FDQS)

Models FDQS22, 28, 36, 45, 56KXE6 (Rear air return type)

Unit:mm

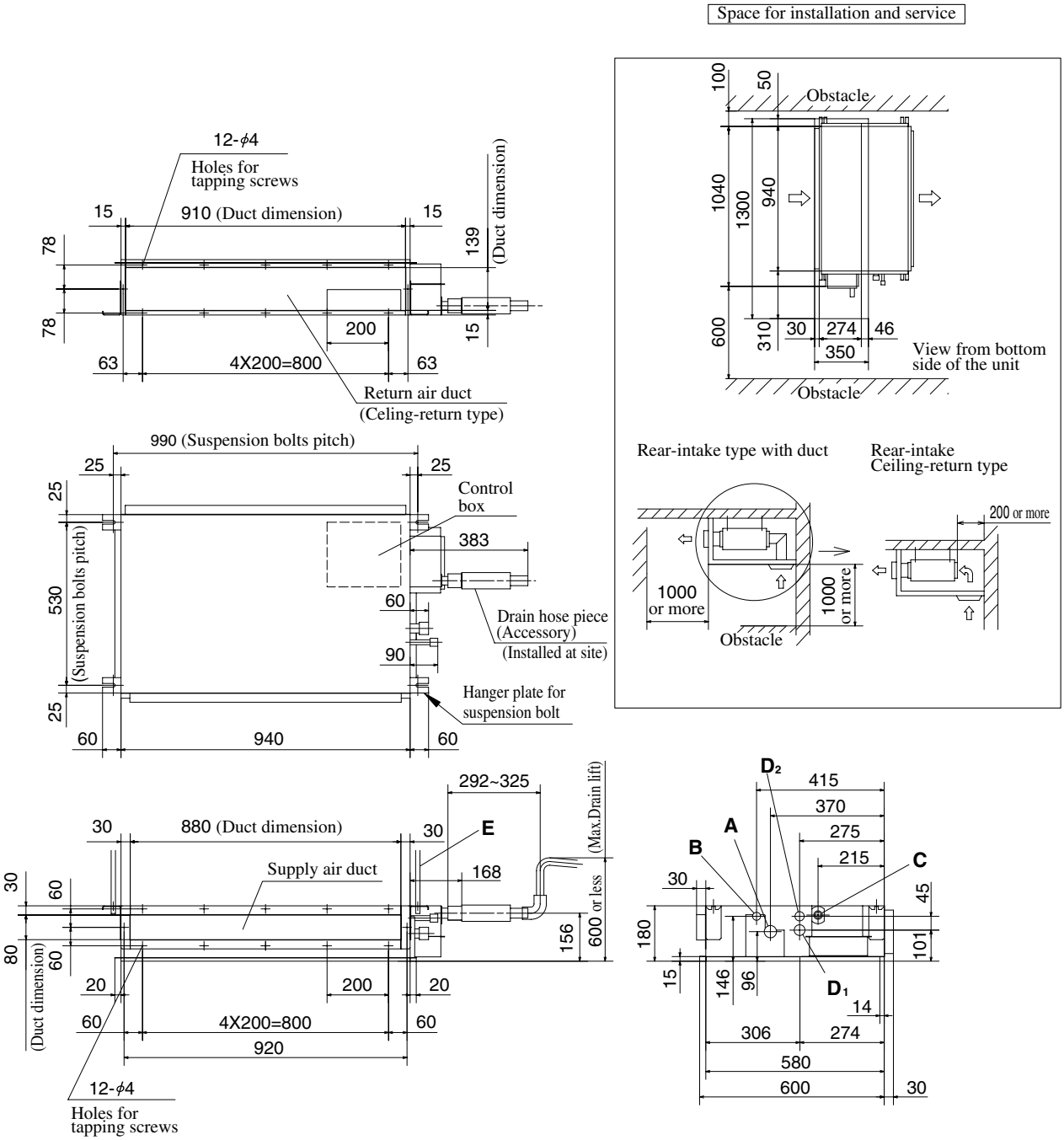

Symbol	Content		
	Model	FDQS22KXE6, 28KXE6	FDQS36KXE6, 45KXE6, 56KXE6
A	Gas piping	φ9.52(3/8")(Flare)	φ12.7(1/2")(Flare)
B	Liquid piping	φ6.35(1/4")(Flare)	
C	Drain piping	VP20 Note (2)	
D_1	Hole for power source wiring	φ35	
D_2	Hole for remote controller wiring and signal wiring	φ30	
E	Suspension bolts	(M10)	

Notes (1) The model name label is attached on the lid of the control box.
(2) Prepare the connecting socket (VP20) on site.

Models FDQS22, 28, 36, 45, 56KXE6 (Underside air return type)

Unit:mm

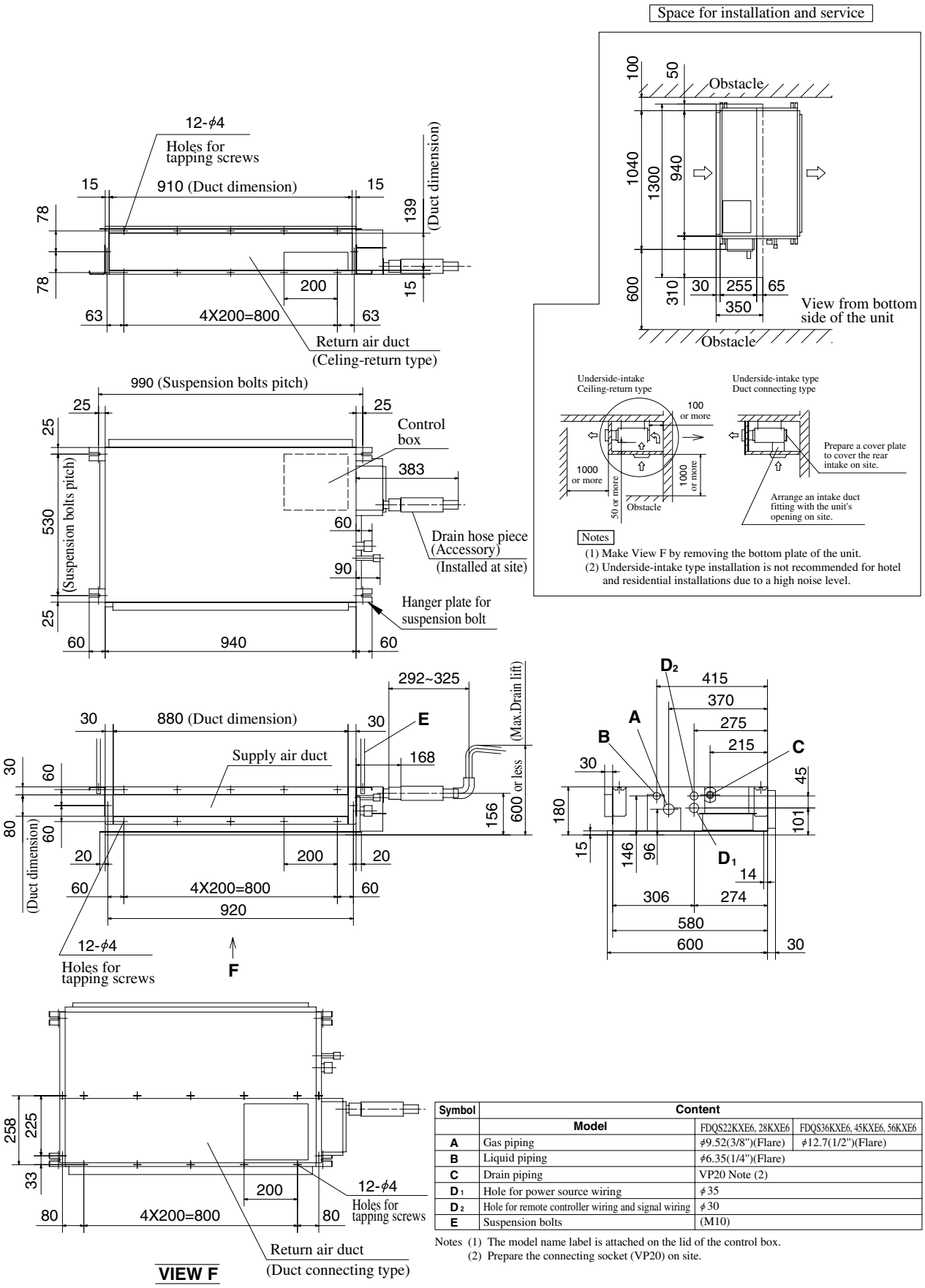

Symbol	Content		
	Model	FDQS22KXE6, 28KXE6	FDQS36KXE6, 45KXE6, 56KXE6
A	Gas piping	φ9.52(3/8")(Flare)	φ12.7(1/2")(Flare)
B	Liquid piping	φ6.35(1/4")(Flare)	
C	Drain piping	VP20 Note (2)	
D_1	Hole for power source wiring	φ35	
D_2	Hole for remote controller wiring and signal wiring	φ30	
E	Suspension bolts	(M10)	

Notes (1) The model name label is attached on the lid of the control box.
(2) Prepare the connecting socket (VP20) on site.

(i) Wall mounted type (FDK)

Models FDK22KXE6, 28KXE6, 36KXE6, 45KXE6, 56KXE6

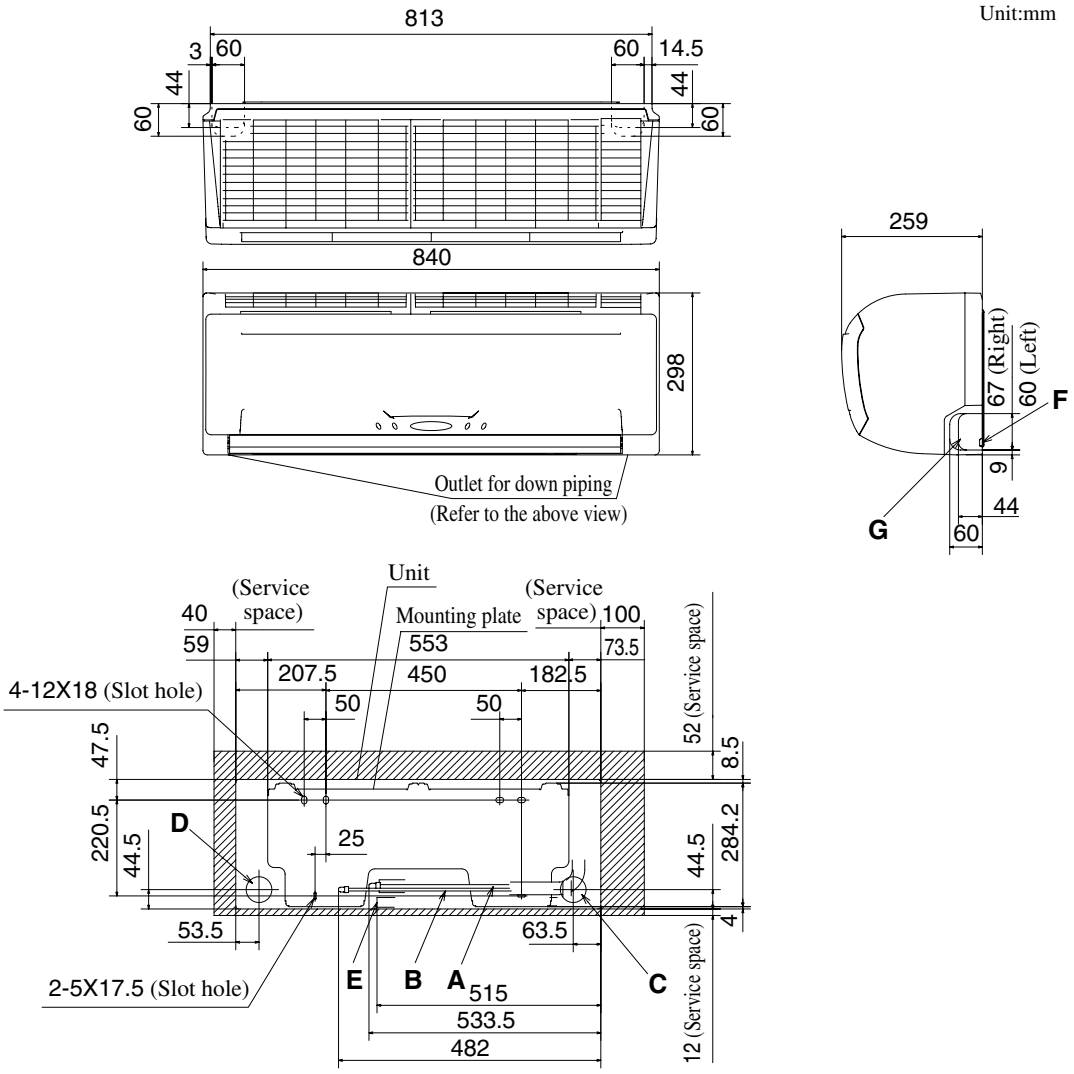

Space for installation and service when viewing from the front

Symbol	Content		
	Model	FDK22, 28KXE6	FDK36, 46, 56KXE6
A	Gas piping	ϕ9.52(3/8")(Flare)	ϕ12.7(1/2")(Flare)
B	Liquid piping	ϕ6.35(1/4")(Flare)	
C	Hole on wall for right rear piping	(ϕ 65)	
D	Hole on wall for left rear piping	(ϕ 65)	
E	Drain piping	VP16	
F	Outlet for wiring		
G	Outlet for piping (on both side)		

Model FDK71KXE6

Unit:mm

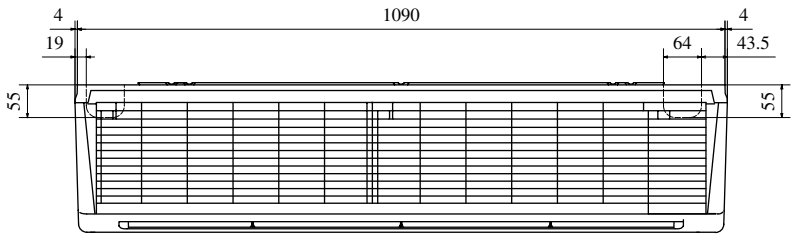

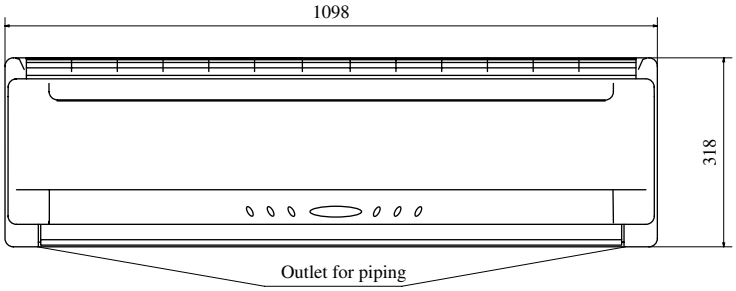

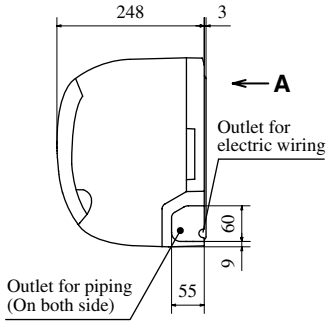

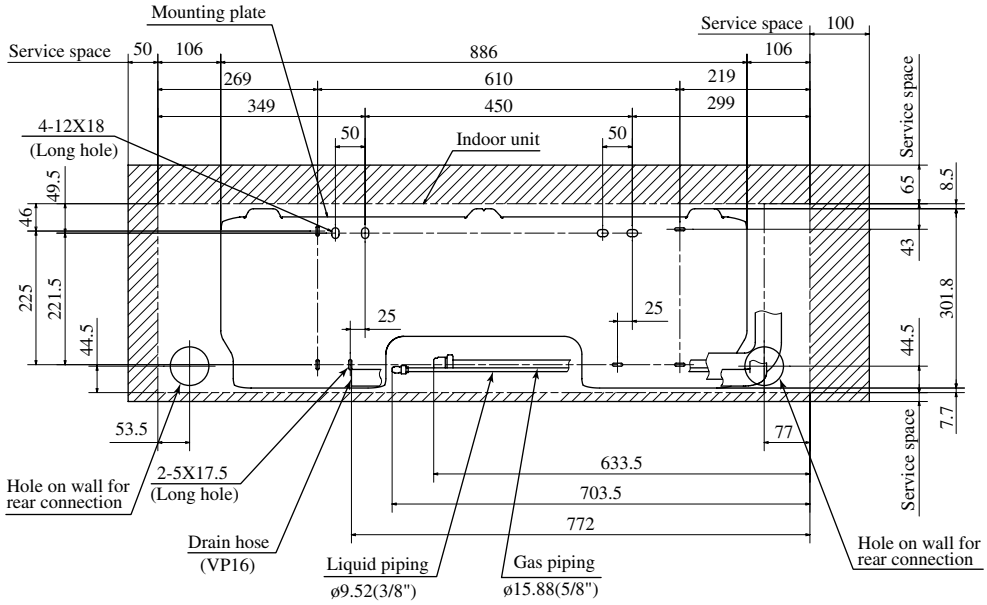

VIEW A (Rear side)

Space for installation and service

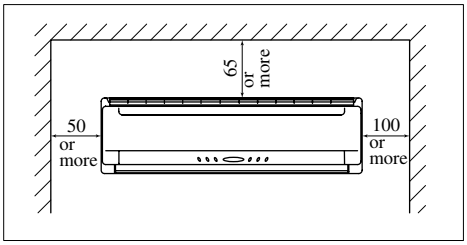

(j) Ceiling suspended type (FDE)

Models FDE36KXE6, 45KXE6, 56KXE6

Unit : mm

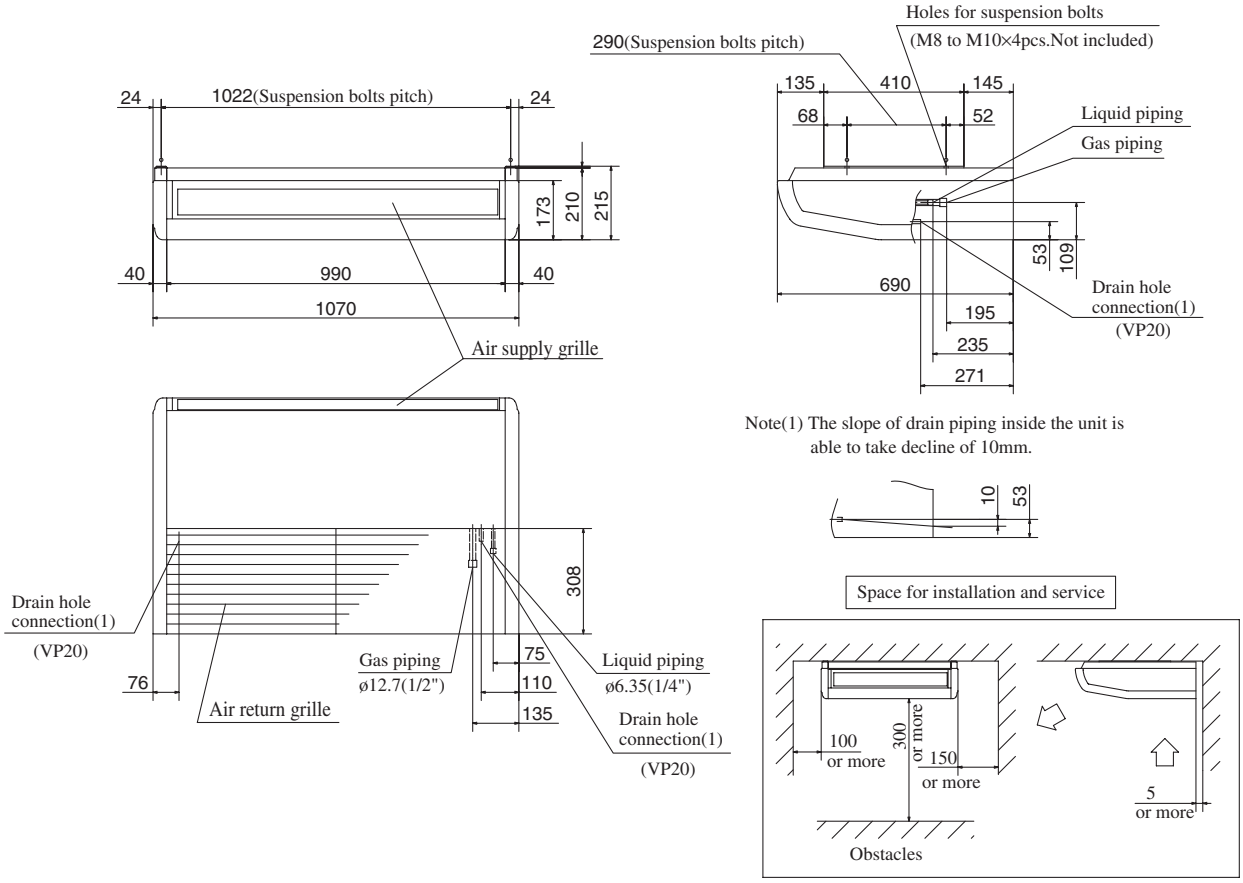

Model FDE71KXE6

Unit : mm

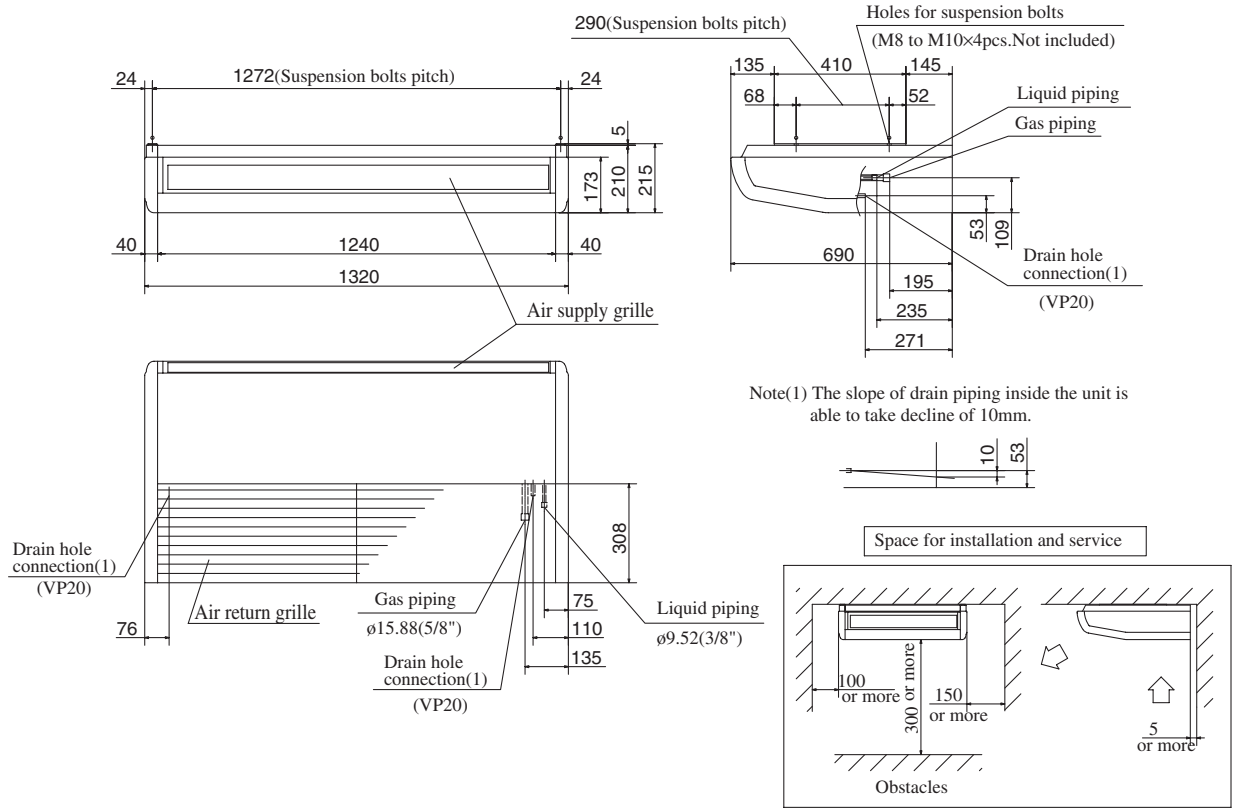

Models FDE112KXE6, 140KXE6

Unit : mm

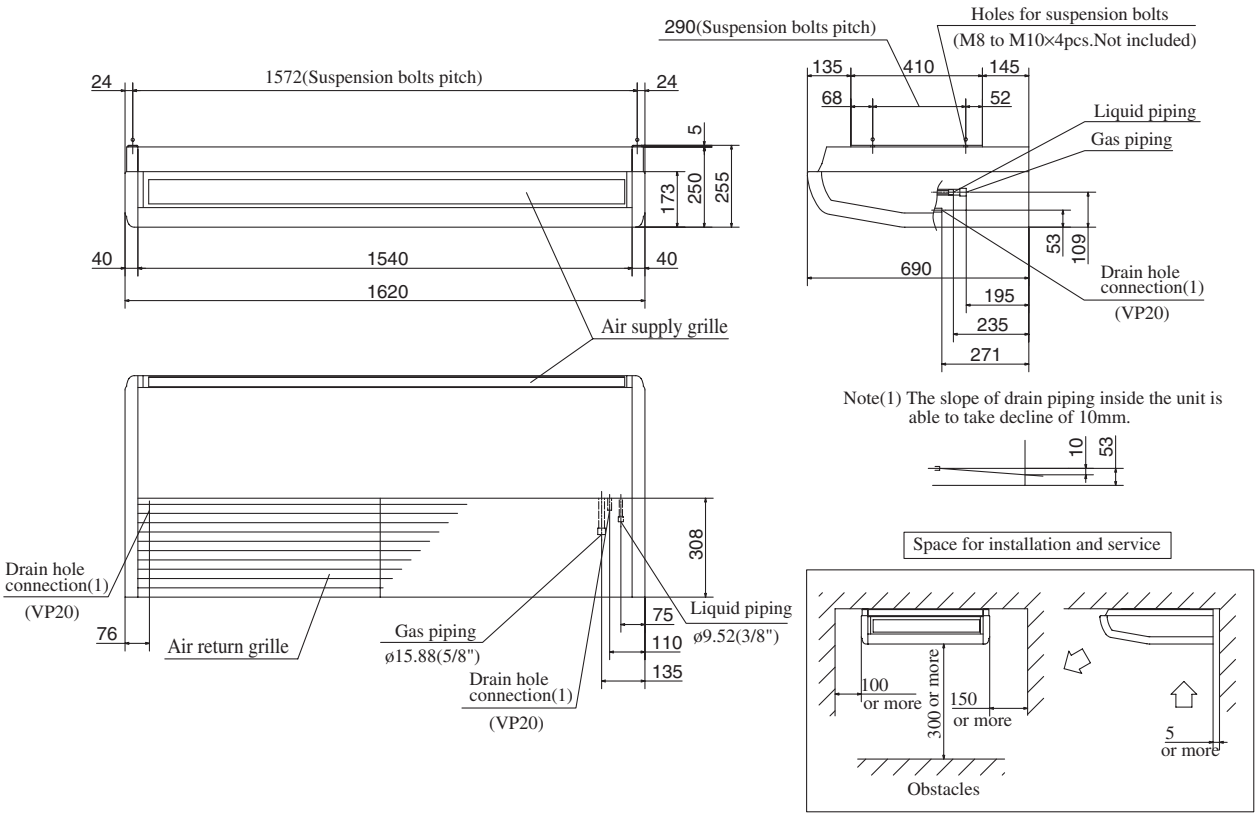

(k) Floor standing (with casing) type (FDFL)

Models FDFL28KXE6, 45KXE6, 71KXE6

Unit : mm

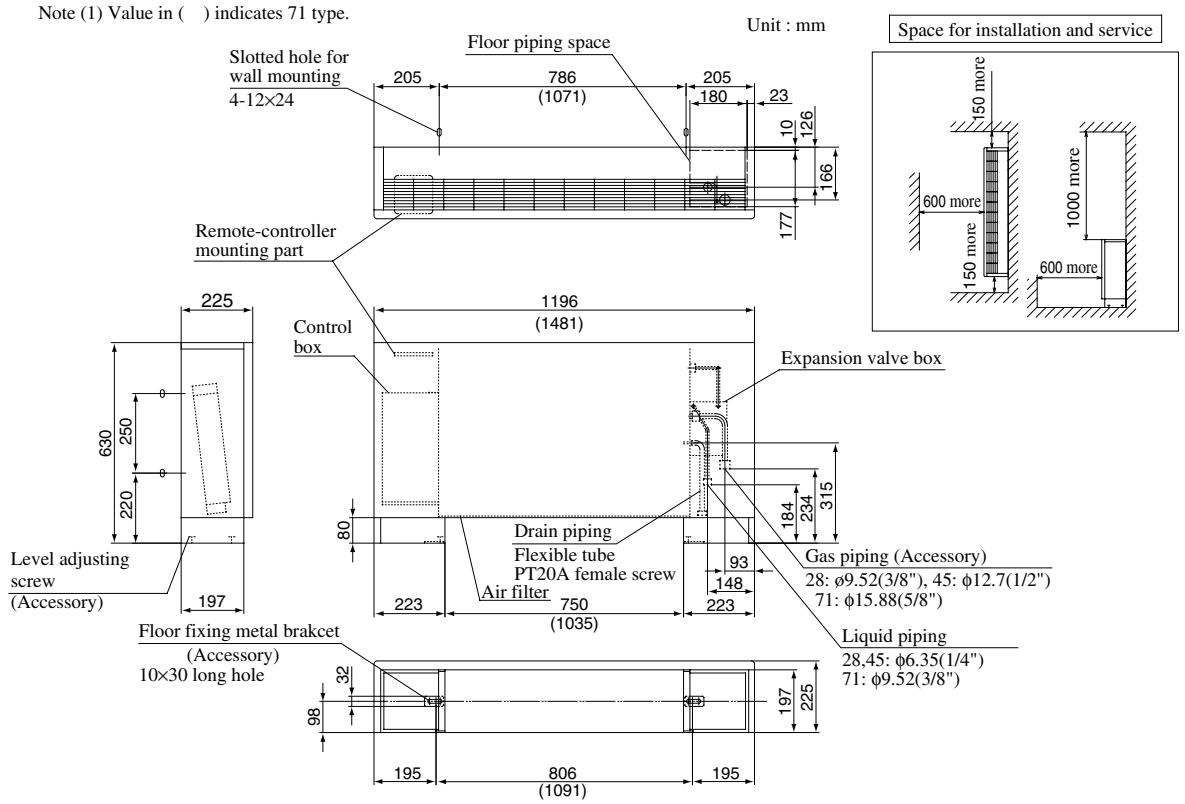

(l) Floor standing (without casing) type (FDFU)

Models FDFU28KXE6, 45KXE6, 56KXE6, 71KXE6

Unit : mm

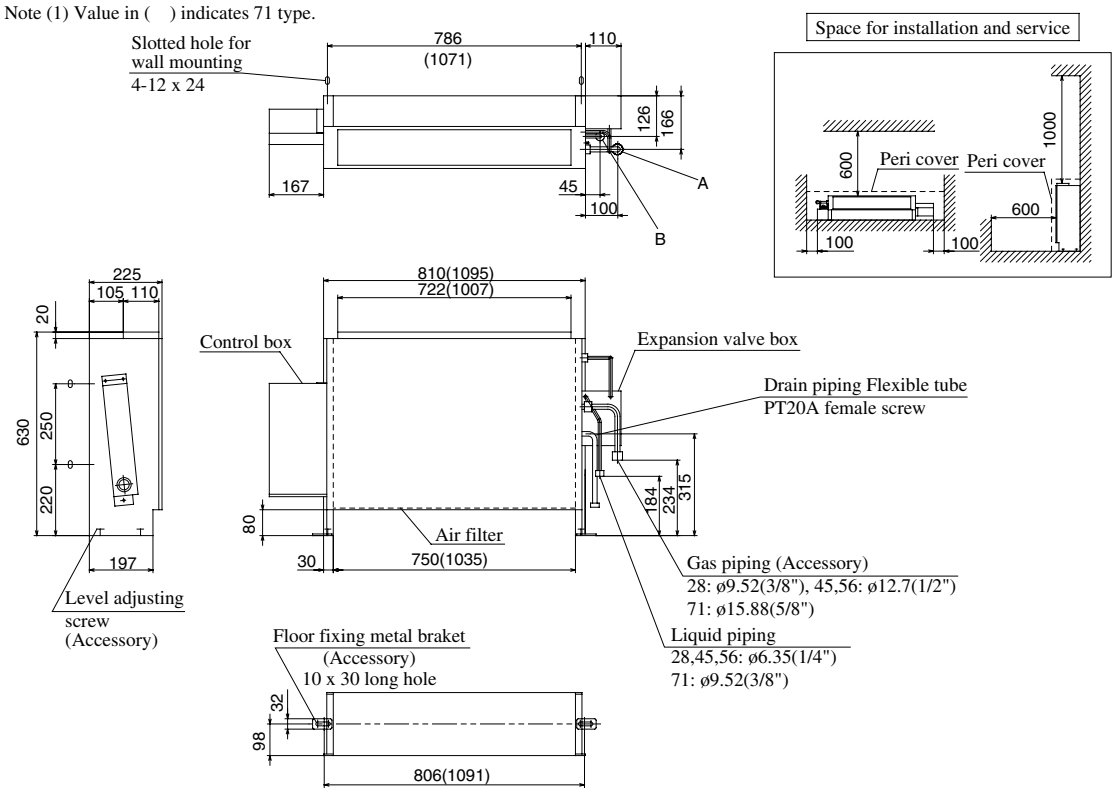

(2) Remote controller (Optional parts)

• Wired remote controller (Model: RC-E3)

Unit : mm

Installation with wiring exposed

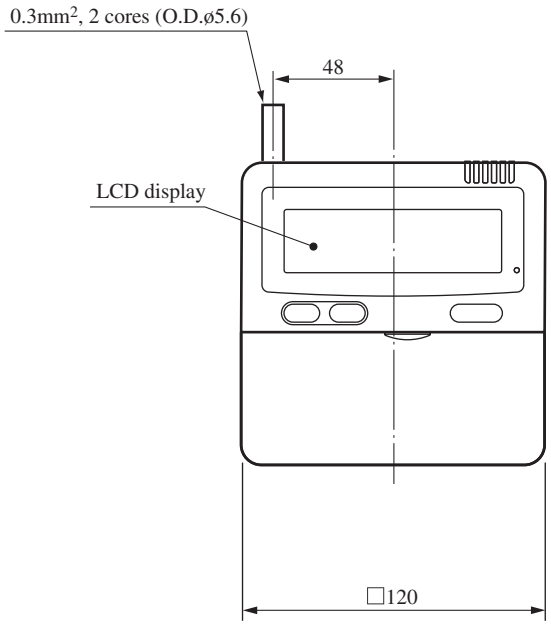

Installation with wiring recessed

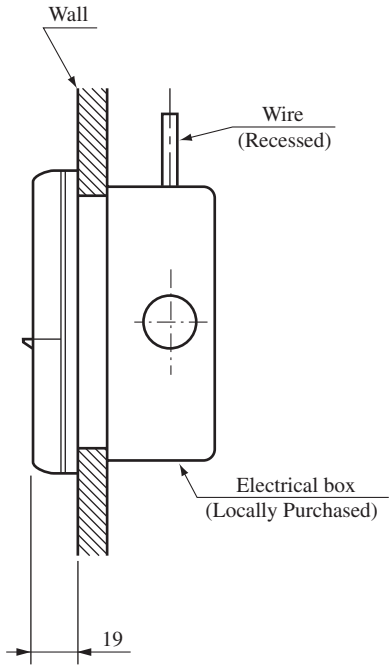

Remote controller mounting dimensions

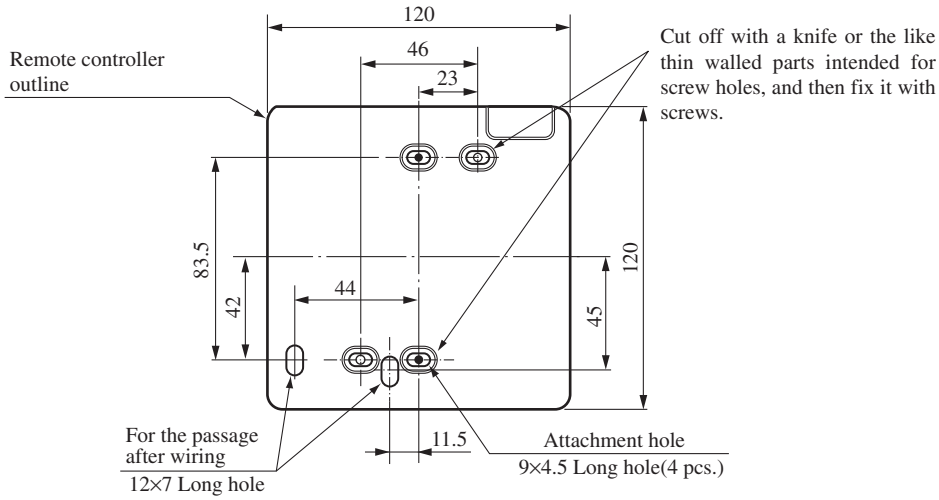

Precation in extending the remote controller cord ▶ Maximum total extension 600m.

The cord should be a shielded wire.

● For all types : 0.3mm^2 × 2 cores

Note: (1) Use cables up to 0.5mm^2 (maximum) for those laid inside the remote controller casing and connect to a different size cable at a vicinity point outside the remote controller, if necessary.

Within 100-200m····· 0.5 mm^2 × 2 cores
Within 300m····· 0.75 mm^2 × 2 cores
Within 400m····· 1.25 mm^2 × 2 cores
Within 600m····· 2.0 mm^2 × 2 cores

● The shielded wire should be grounded at one side only.

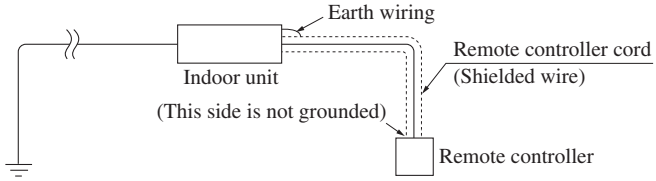

3.3 Electrical wiring

(a) Ceiling cassette-4 way type (FDT)

Models All: models

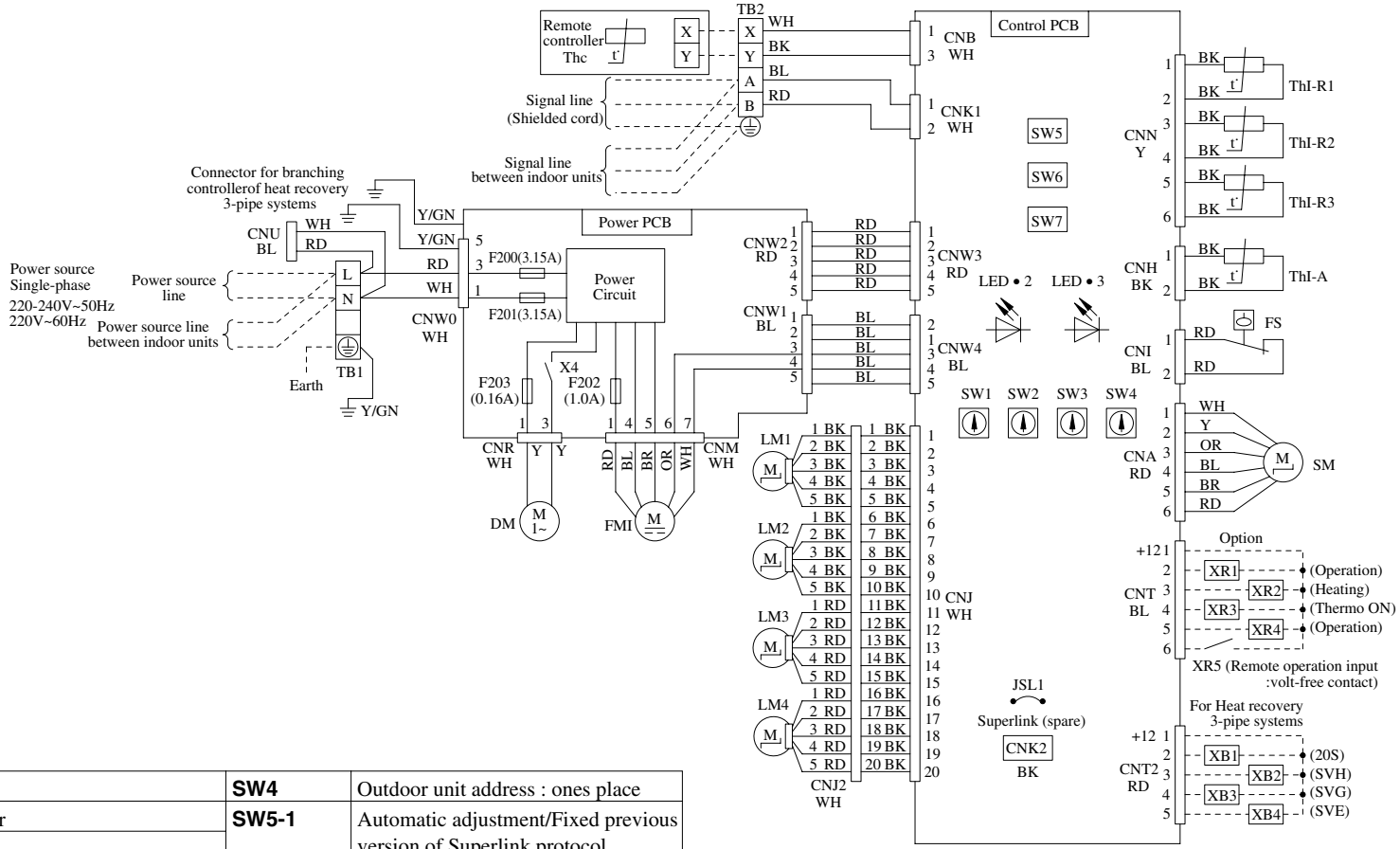

Meaning of marks

CNA~Z	Connector	**SW4**	Outdoor unit address : ones place
DM	Drain motor	**SW5-1**	Automatic adjustment/Fixed previous version of Superlink protocol
F200-203	Fuse		
FMI	Fan motor	**SW5-2**	Indoor unit address : hundreds place
FS	Float switch	**SW6**	Model capacity setting
JSL1	Live Superlink terminal setting (for spare)	**SW7-1**	Operation check, Drain motor test run
LED·2	Indication lamp (Green-Normal operation)	**TB1**	Terminal block (Power source) (□ mark)
LED·3	Indication lamp (Red-Inspection)	**TB2**	Terminal block (Signal line) (□ mark)
LM1~4	Louver motor	**Thc**	Thermistor (Remote controller)
SM	Stepping motor (for electronic expansion valve)	**ThI-A**	Thermistor (Return air)
		ThI-R1,2,3	Thermistor (Heat exchanger)
SW1	Indoor unit address : tens place	**X4**	Relay for DM
SW2	Indoor unit address : ones place	**■ mark**	Closed-end connector
SW3	Outdoor unit address : tens place		

Color marks

Mark	Color	Mark	Color
BK	Black	**RD**	Red
BL	Blue	**WH**	White
BR	Brown	**Y**	Yellow
OR	Orange	**Y/GN**	Yellow/Green

Notes

1. ——indicates wiring on site.
2. Use twin core cord (0.75~1.25mm^2) at signal line between indoor unit and outdoor unit, and signal line between indoor units.
3. Use twin core cord (0.3mm^2) at remote controller line. See spec sheet of remote controller in case that the total length is more than 100m.
4. Do not put signal line and remote controller line alongside power source line.

(b) Ceiling cassette-4 way compact type (FDTC)

Models All: models

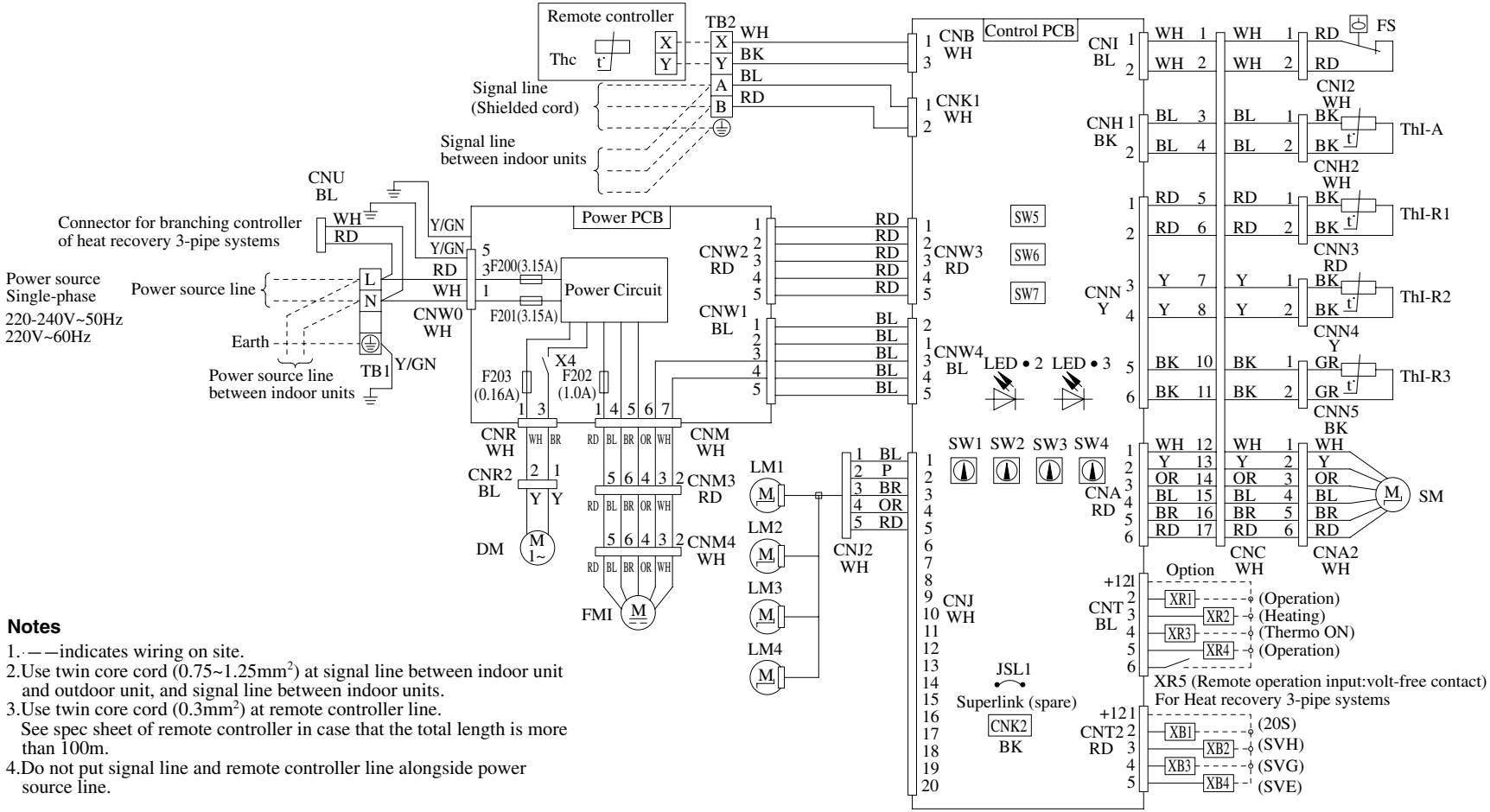

Notes

1. ——indicates wiring on site.
2. Use twin core cord (0.75~1.25mm^2) at signal line between indoor unit and outdoor unit, and signal line between indoor units.
3. Use twin core cord (0.3mm^2) at remote controller line. See spec sheet of remote controller in case that the total length is more than 100m.
4. Do not put signal line and remote controller line alongside power source line.

Meaning of marks

CNA~Z	Connector
DM	Drain motor
F200~203	Fuse
FMI	Fan motor
FS	Float switch
JSL1	Live Superlink terminal setting (for spare)
LED·2	Indication lamp (Green-Normal operation)
LED·3	Indication lamp (Red-Inspection)
LM1~4	Louver motor

SM	Stepping motor (for electronic expansion valve)
SW1	Indoor unit address : tens place
SW2	Indoor unit address : ones place
SW3	Outdoor unit address : tens place
SW4	Outdoor unit address : ones place
SW5-1	Automatic adjustment/Fixed previous version of Superlink protocol
SW5-2	Indoor unit address : hundreds place
SW6	Model capacity setting

SW7-1	Operation check, Drain motor test run
TB1	Terminal block (Power source) (□ mark)
TB2	Terminal block (Signal line) (□ mark)
Thc	Thermistor (Remote controller)
ThI-A	Thermistor (Return air)
ThI-R1,2,3	Thermistor (Heat exchanger)
X4	Relay for DM
■ mark	Closed-end connector

Color marks

Mark	Color
BK	Black
BL	Blue
BR	Brown
GR	Gray
OR	Orange
P	Pink
RD	Red
WH	White
Y	Yellow
Y/GN	Yellow/Green

(c) Ceiling cassette-2 way type (FDTW)
Models FDTW28KXE6, 45KXE6, 56KXE6

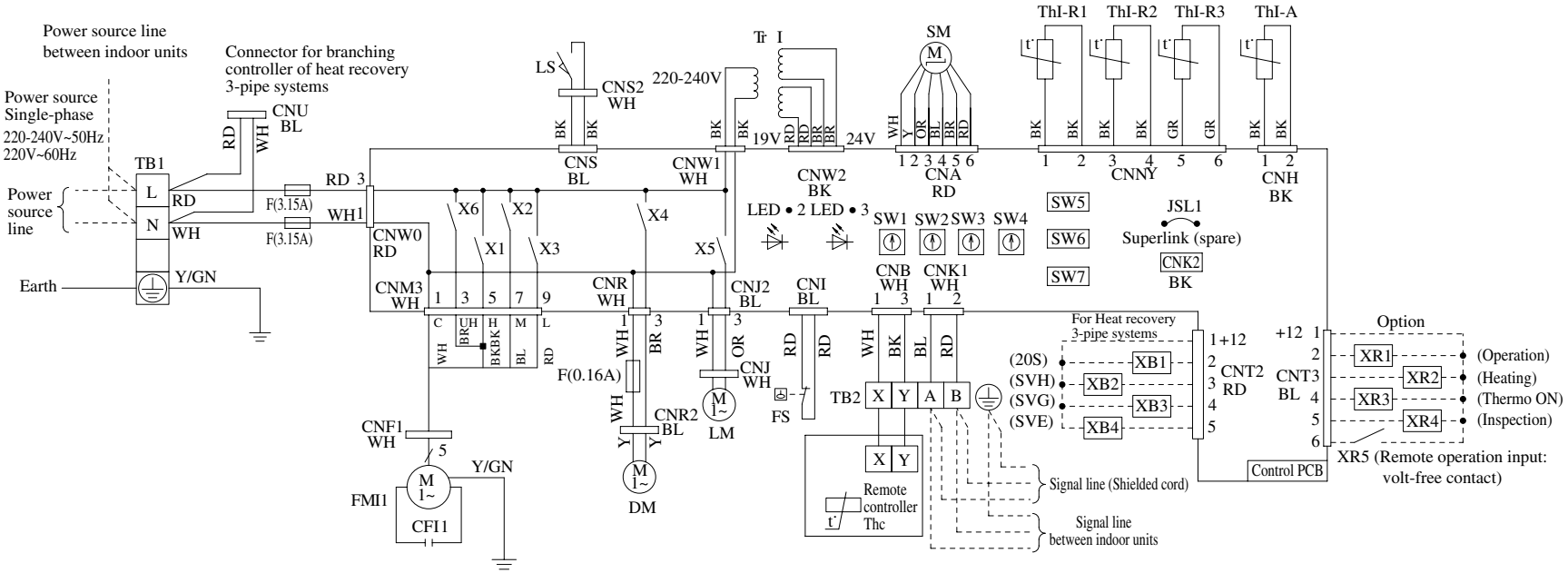

Meaning of marks

CFI1	Capacitor for FMI	**SW4**	Outdoor unit address : ones place
CNA~Z	Connector	**SW5-1**	Automatic adjustment/Fixed previous version of Superlink protocol
DM	Drain motor		
F	Fuse	**SW5-2**	Indoor unit address : hundreds place
FMI1	Fan motor (with thermostat)	**SW6**	Model capacity setting
FS	Float switch	**SW7-1**	Operation check, Drain motor test run
JSL1	Live Superlink terminal setting (for spare)	**TB1**	Terminal block (Power source)(□ mark)
LED·2	Indication lamp (Green-Normal operation)	**TB2**	Terminal block (Signal line) (□ mark)
LED·3	Indication lamp (Red-Inspection)	**Thc**	Thermistor (Remote controller)
LM	Louver motor	**ThI-A**	Thermistor (Return air)
LS	Louver switch	**ThI-R1,2,3**	Thermistor (Heat exchanger)
SM	Stepping motor (for electronic expansion valve)	**TrI**	Thermistor
		X1~3,6	Relay for FM
SW1	Indoor unit address : tens place	**X4**	Relay for DM
SW2	Indoor unit address : ones place	**X5**	Relay for LM
SW3	Outdoor unit address : tens place		

Color marks

Mark	Color
BK	Black
BL	Blue
BR	Brown
GR	Gray
OR	Orange
RD	Red
WH	White
Y	Yellow
Y/GN	Yellow/Green

Notes

1. ——indicates wiring on site.
2. Use twin core cord (0.75~1.25mm^2) at signal line between indoor unit and outdoor unit, and signal line between indoor units.
3. Use twin core cord (0.3mm^2) at remote controller line. See spec sheet of remote controller in case that the total length is more than 100m.
4. Do not put signal line and remote controller line alongside power source line.

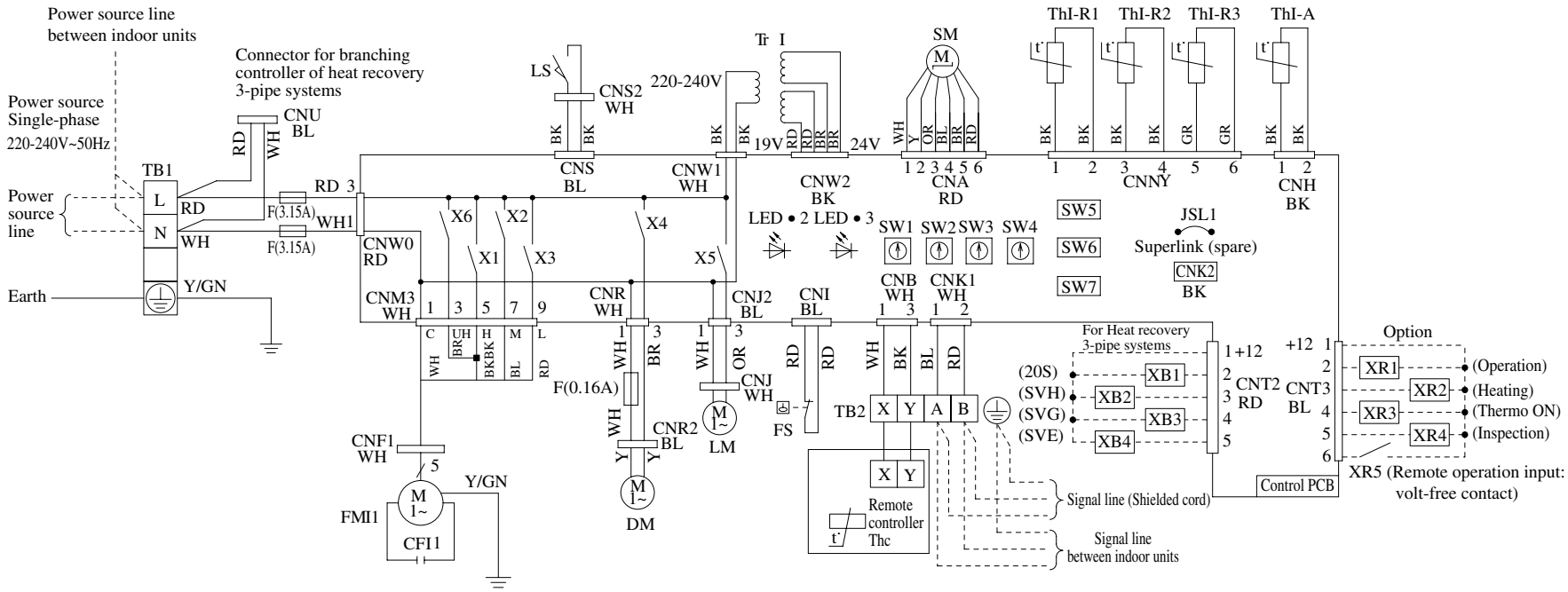

Meaning of marks

CFI1	Capacitor for FMI	**SW4**	Outdoor unit address : ones place
CNA~Z	Connector	**SW5-1**	Automatic adjustment/Fixed previous version of Superlink protocol
DM	Drain motor		
F	Fuse	**SW5-2**	Indoor unit address : hundreds place
FMI1	Fan motor (with thermostat)	**SW6**	Model capacity setting
FS	Float switch	**SW7-1**	Operation check, Drain motor test run
JSL1	Live Superlink terminal setting (for spare)	**TB1**	Terminal block (Power source)(□ mark)
LED·2	Indication lamp (Green-Normal operation)	**TB2**	Terminal block (Signal line) (□ mark)
LED·3	Indication lamp (Red-Inspection)	**Thc**	Thermistor (Remote controller)
LM	Louver motor	**ThI-A**	Thermistor (Return air)
LS	Louver switch	**ThI-R1,2,3**	Thermistor (Heat exchanger)
SM	Stepping motor (for electronic expansion valve)	**TrI**	Thermistor
		X1~3,6	Relay for FM
SW1	Indoor unit address : tens place	**X4**	Relay for DM
SW2	Indoor unit address : ones place	**X5**	Relay for LM
SW3	Outdoor unit address : tens place		

Color marks

Mark	Color
BK	Black
BL	Blue
BR	Brown
GR	Gray
OR	Orange
RD	Red
WH	White
Y	Yellow
Y/GN	Yellow/Green

Notes

1. ——indicates wiring on site.
2. Use twin core cord (0.75~1.25mm^2) at signal line between indoor unit and outdoor unit, and signal line between indoor units.
3. Use twin core cord (0.3mm^2) at remote controller line. See spec sheet of remote controller in case that the total length is more than 100m.
4. Do not put signal line and remote controller line alongside power source line.

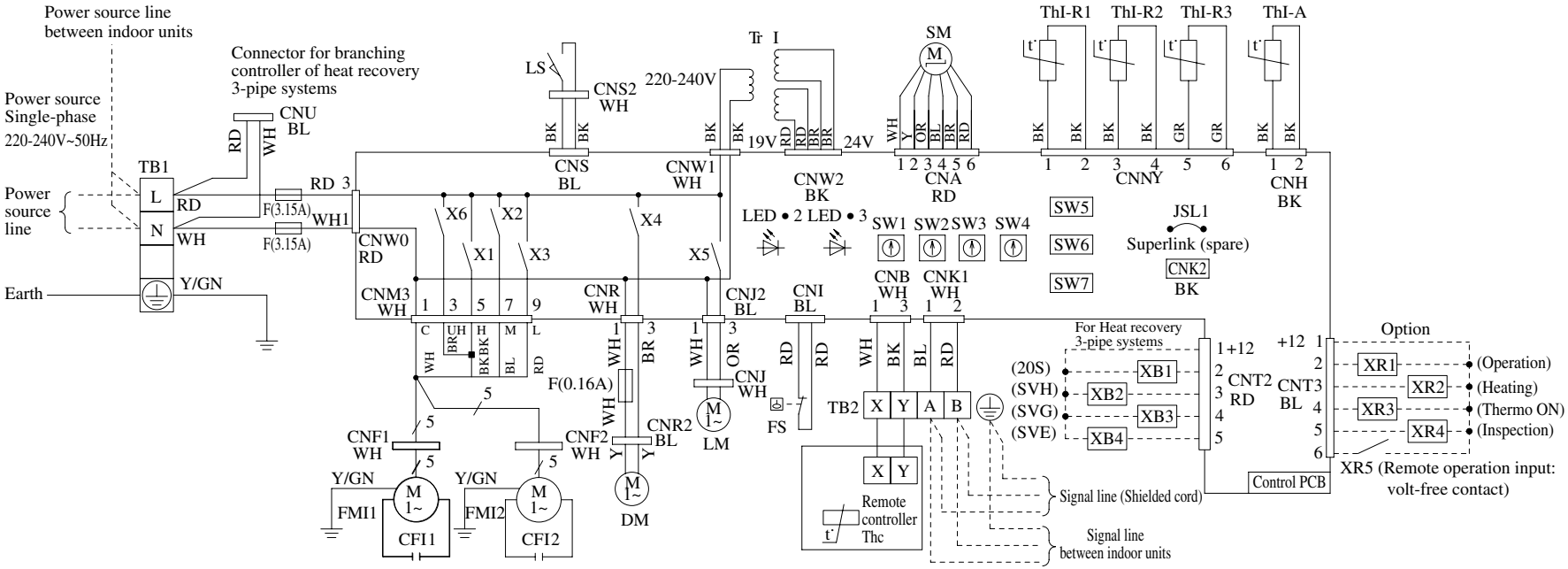

Meaning of marks

CFI1	Capacitor for FMI	**SW4**	Outdoor unit address : ones place
CNA~Z	Connector	**SW5-1**	Automatic adjustment/Fixed previous version of Superlink protocol
DM	Drain motor		
F	Fuse	**SW5-2**	Indoor unit address : hundreds place
FMI1	Fan motor (with thermostat)	**SW6**	Model capacity setting
FS	Float switch	**SW7-1**	Operation check, Drain motor test run
JSL1	Live Superlink terminal setting (for spare)	**TB1**	Terminal block (Power source)(□ mark)
LED·2	Indication lamp (Green-Normal operation)	**TB2**	Terminal block (Signal line) (□ mark)
LED·3	Indication lamp (Red-Inspection)	**Thc**	Thermistor (Remote controller)
LM	Louver motor	**ThI-A**	Thermistor (Return air)
LS	Louver switch	**ThI-R1,2,3**	Thermistor (Heat exchanger)
SM	Stepping motor (for electronic expansion valve)	**TrI**	Thermistor
		X1~3,6	Relay for FM
SW1	Indoor unit address : tens place	**X4**	Relay for DM
SW2	Indoor unit address : ones place	**X5**	Relay for LM
SW3	Outdoor unit address : tens place	**■ mark**	Closed-end connector

Color marks

Mark	Color
BK	Black
BL	Blue
BR	Brown
GR	Gray
OR	Orange
RD	Red
WH	White
Y	Yellow
Y/GN	Yellow/Green

Notes

1. ——indicates wiring on site.
2. Use twin core cord (0.75~1.25mm^2) at signal line between indoor unit and outdoor unit, and signal line between indoor units.
3. Use twin core cord (0.3mm^2) at remote controller line. See spec sheet of remote controller in case that the total length is more than 100m.
4. Do not put signal line and remote controller line alongside power source line.

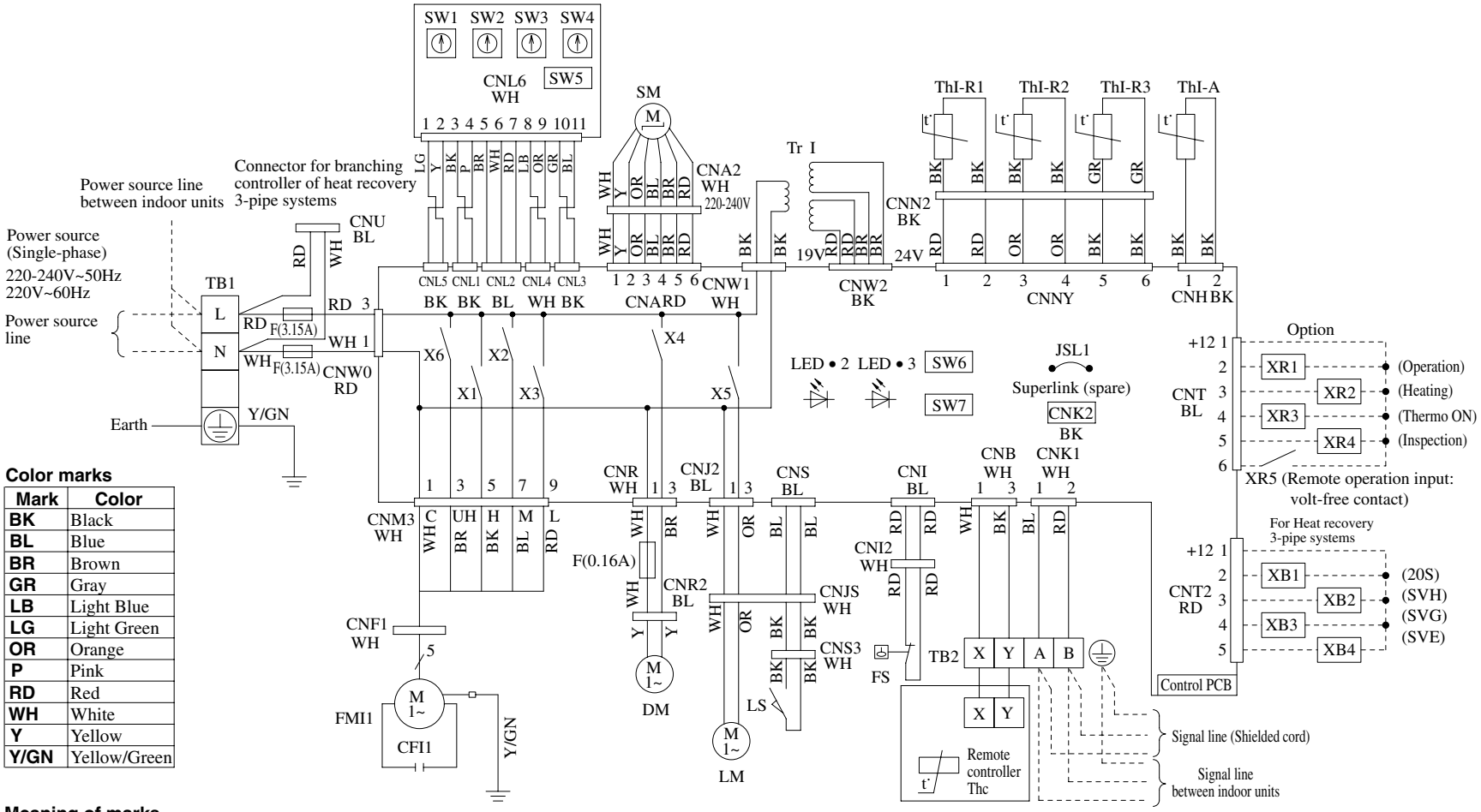

Color marks

Mark	Color
BK	Black
BL	Blue
BR	Brown
GR	Gray
LB	Light Blue
LG	Light Green
OR	Orange
P	Pink
RD	Red
WH	White
Y	Yellow
Y/GN	Yellow/Green

Meaning of marks

CFI1	Capacitor for FMI	SM	Stepping motor (for electronic expansion valve)	TB1	Terminal block (Power source)(□ mark)
CNA~Z	Connector			TB2	Terminal block (Signal line) (□ mark)
DM	Drain motor	SW1	Indoor unit address : tens place	Thc	Thermistor (Remote controller)
F	Fuse	SW2	Indoor unit address : ones place	ThI-A	Thermistor (Return air)
FMI1	Fan motor (with thermostat)	SW3	Outdoor unit address : tens place	ThI-R1,2,3	Thermistor (Heat exchanger)
FS	Float switch	SW4	Outdoor unit address : ones place	TrI	Thermistor
JSL1	Live Superlink terminal setting (for spare)	SW5-1	Automatic adjustment/Fixed previous version of Superlink protocol	X1~3,6	Relay for FM
LED·2	Indication lamp (Green-Normal operation)			X4	Relay for DM
LED·3	Indication lamp (Red-Inspection)	SW5-2	Indoor unit address : hundreds place	X5	Relay for LM
LM	Louver motor	SW6	Model capacity setting	■ mark	Closed-end connector
LS	Louver switch	SW7-1	Operation check, Drain motor test run		

Notes

1. ——indicates wiring on site.
2. Use twin core cord (0.75~1.25mm^2) at signal line between indoor unit and outdoor unit, and signal line between indoor units.
3. Use twin core cord (0.3mm^2) at remote controller line. See spec sheet of remote controller in case that the total length is more than 100m.
4. Do not put signal line and remote controller line alongside power source line.

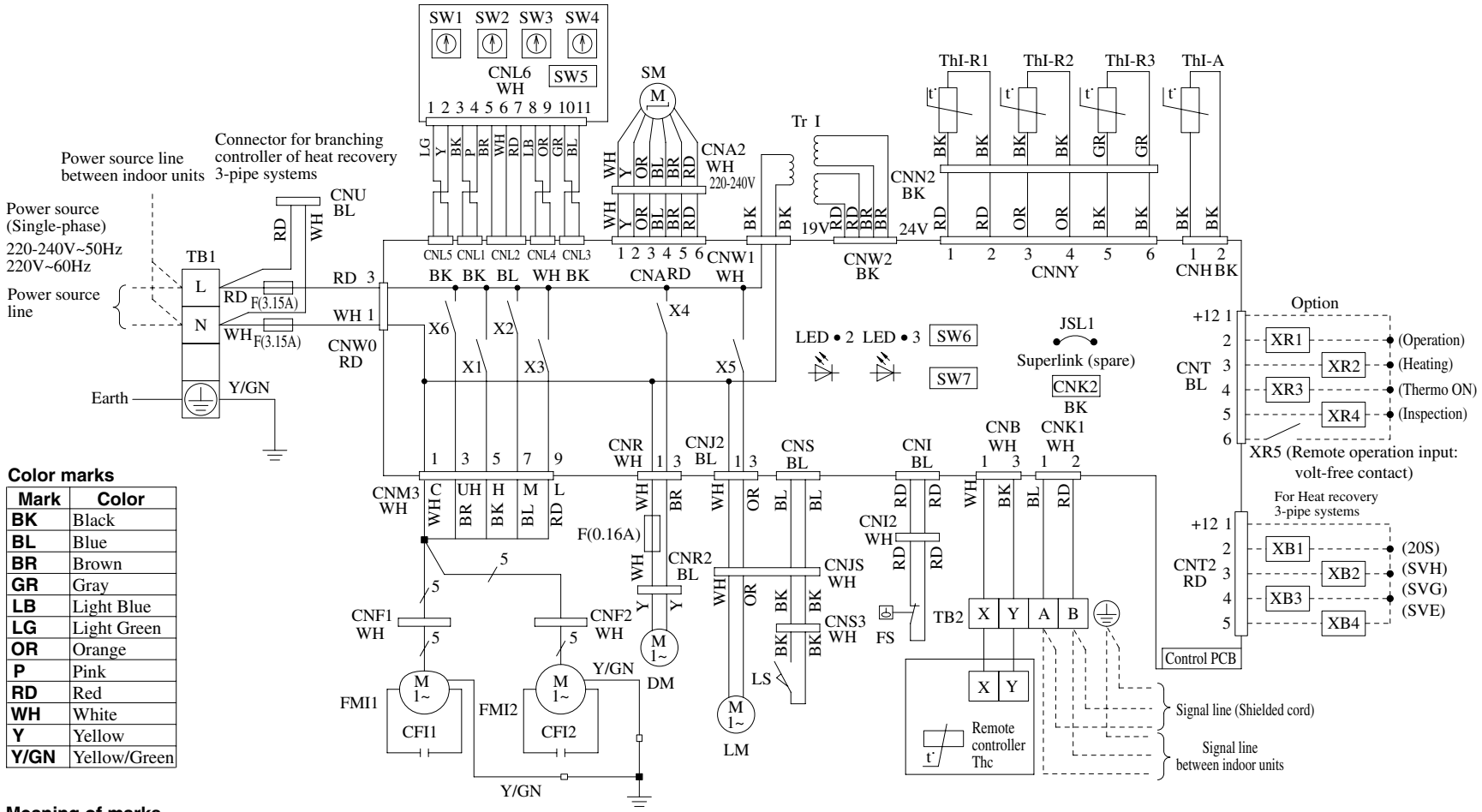

Color marks

Mark	Color
BK	Black
BL	Blue
BR	Brown
GR	Gray
LB	Light Blue
LG	Light Green
OR	Orange
P	Pink
RD	Red
WH	White
Y	Yellow
Y/GN	Yellow/Green

Meaning of marks

CFI1,2	Capacitor for FMI	SM	Stepping motor (for electronic expansion valve)	TB1	Terminal block (Power source)(□ mark)
CNA~Z	Connector			TB2	Terminal block (Signal line) (□ mark)
DM	Drain motor	SW1	Indoor unit address : tens place	Thc	Thermistor (Remote controller)
F	Fuse	SW2	Indoor unit address : ones place	ThI-A	Thermistor (Return air)
FMI1,2	Fan motor (with thermostat)	SW3	Outdoor unit address : tens place	ThI-R1,2,3	Thermistor (Heat exchanger)
FS	Float switch	SW4	Outdoor unit address : ones place	TrI	Thermistor
JSL1	Live Superlink terminal setting (for spare)	SW5-1	Automatic adjustment/Fixed previous version of Superlink protocol	X1~3,6	Relay for FM
LED·2	Indication lamp (Green-Normal operation)			X4	Relay for DM
LED·3	Indication lamp (Red-Inspection)	SW5-2	Indoor unit address : hundreds place	X5	Relay for LM
LM	Louver motor	SW6	Model capacity setting	■ mark	Closed-end connector
LS	Louver switch	SW7-1	Operation check, Drain motor test run		

Notes

1. ——indicates wiring on site.
2. Use twin core cord (0.75~1.25mm^2) at signal line between indoor unit and outdoor unit, and signal line between indoor units.
3. Use twin core cord (0.3mm^2) at remote controller line. See spec sheet of remote controller in case that the total length is more than 100m.
4. Do not put signal line and remote controller line alongside power source line.

(e) Ceiling cassette-1 way compact type (FDTQ)

Models All models

- **Direct blow panel**

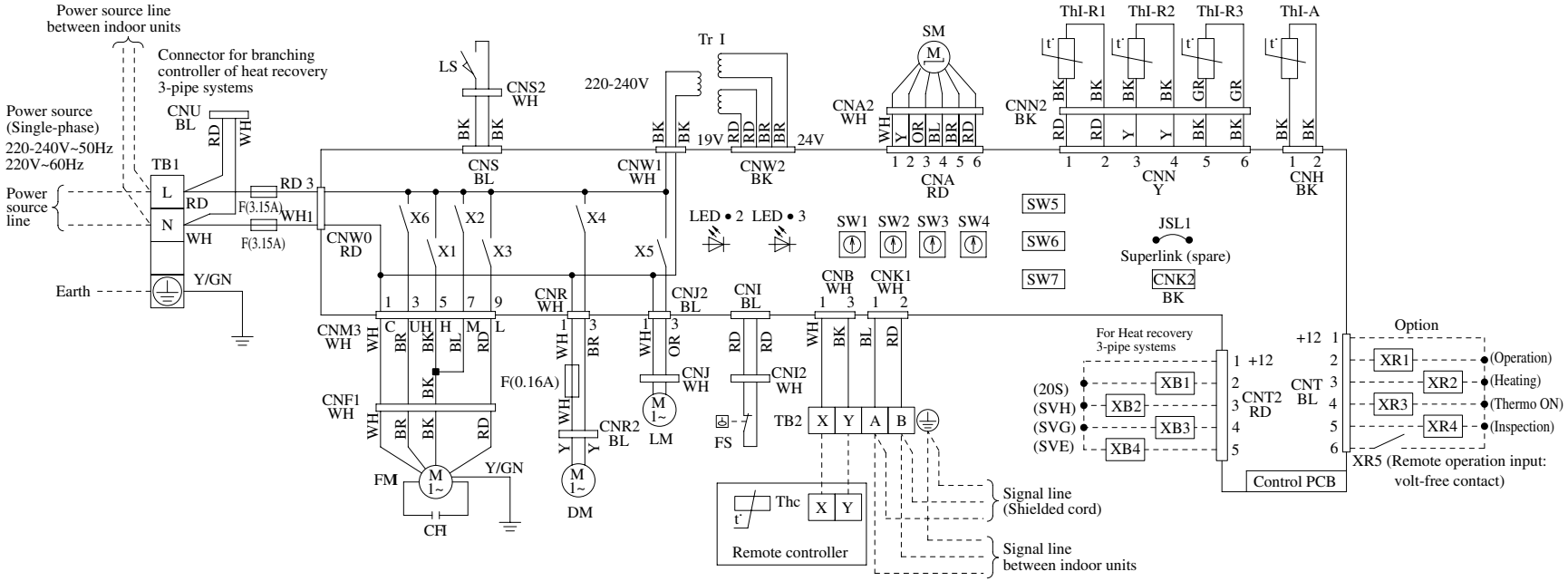

Notes

1. ——indicates wiring on site.
2. Use twin core cord (0.75~1.25mm^2) at signal line between indoor unit and outdoor unit, and signal line between indoor units.
3. Use twin core cord (0.3mm^2) at remote controller line. See spec sheet of remote controller in case that the total length is more than 100m.
4. Do not put signal line and remote controller line alongside power source line.

Meaning of marks

CFI	Capacitor for FMI
CNA~Z	Connector
DM	Drain motor
F	Fuse
FMI	Fan motor (with thermostat)
FS	Float switch
JSL1	Live Superlink terminal setting (for spare)
LED·2	Indication lamp (Green-Normal operation)
LED·3	Indication lamp (Red-Inspection)
LM	Louver motor
LS	Louver switch

SM	Stepping motor (for electronic expansion valve)
SW1	Indoor unit address : tens place
SW2	Indoor unit address : ones place
SW3	Outdoor unit address : tens place
SW4	Outdoor unit address : ones place
SW5-1	Automatic adjustment/Fixed previous version of Superlink protocol
SW5-2	Indoor unit address : hundreds place
SW6	Model capacity setting
SW7-1	Operation check, Drain motor test run

TB1	Terminal block (Power source) (□ mark)
TB2	Terminal block (Signal line) (□ mark)
Thc	Thermistor (Remote controller)
ThI-A	Thermistor (Return air)
ThI-R1,2,3	Thermistor (Heat exchanger)
TrI	Thermistor
X1~3,6	Relay for FM
X4	Relay for DM
X5	Relay for LM
■ mark	Closed-end connector

Color marks

Mark	Color	Mark	Color
BK	Black	**RD**	Red
BL	Blue	**WH**	White
BR	Brown	**Y**	Yellow
GR	Gray	**Y/GN**	Yellow/Green
OR	Orange		

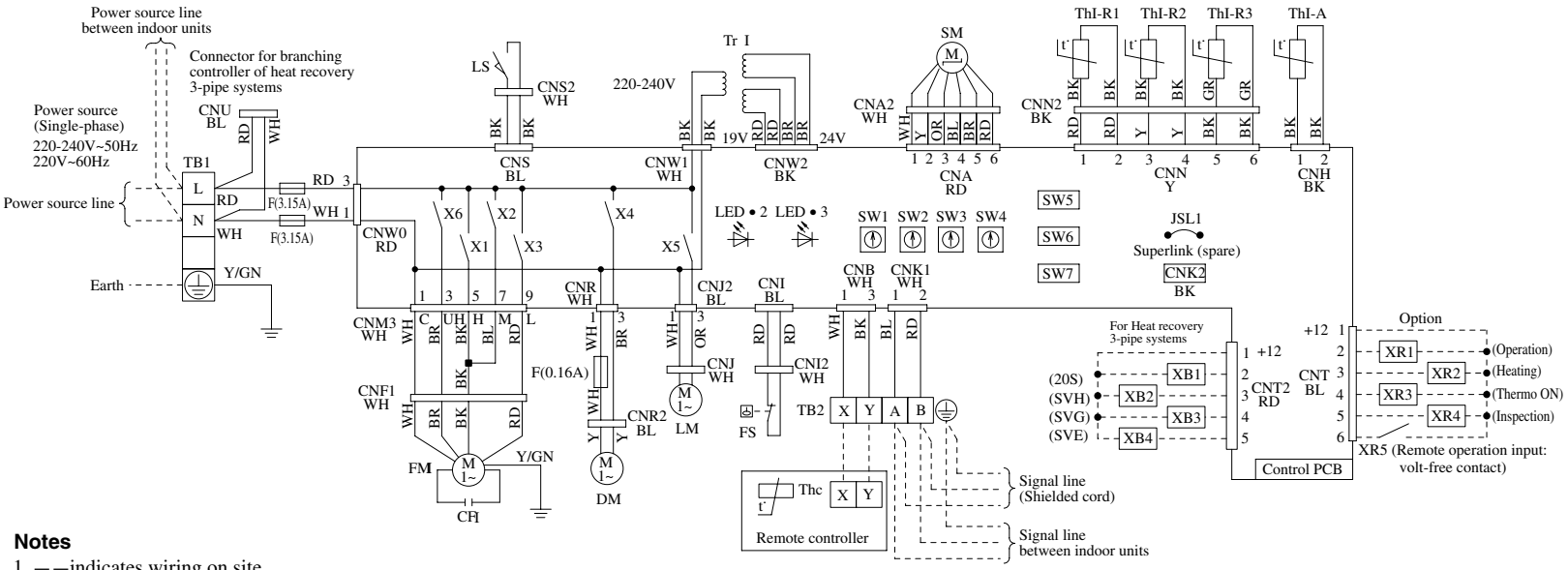

Notes

1. ——indicates wiring on site.
2. Use twin core cord (0.75~1.25mm^2) at signal line between indoor unit and outdoor unit, and signal line between indoor units.
3. Use twin core cord (0.3mm^2) at remote controller line. See spec sheet of remote controller in case that the total length is more than 100m.
4. Do not put signal line and remote controller line alongside power source line.

Color marks

Mark	Color	Mark	Color
BK	Black	RD	Red
BL	Blue	WH	White
BR	Brown	Y	Yellow
GR	Gray	Y/GN	Yellow/Green
OR	Orange		

Meaning of marks

CFI	Capacitor for FMI
CNA~Z	Connector
DM	Drain motor
F	Fuse
FMI	Fan motor (with thermostat)
FS	Float switch
JSL1	Live Superlink terminal setting (for spare)
LED·2	Indication lamp (Green-Normal operation)
LED·3	Indication lamp (Red-Inspection)

SM	Stepping motor (for electronic expansion valve)
SW1	Indoor unit address : tens place
SW2	Indoor unit address : ones place
SW3	Outdoor unit address : tens place
SW4	Outdoor unit address : ones place
SW5-1	Automatic adjustment/Fixed previous version of Superlink protocol
SW5-2	Indoor unit address : hundreds place
SW6	Model capacity setting
SW7-1	Operation check, Drain motor test run

TB1	Terminal block (Power source) (□ mark)
TB2	Terminal block (Signal line) (□ mark)
Thc	Thermistor (Remote controller)
ThI-A	Thermistor (Return air)
ThI-R1,2,3	Thermistor (Heat exchanger)
TrI	Thermistor
X1~3,6	Relay for FM
X4	Relay for DM
X5	Relay for LM
■ mark	Closed-end connector

Changing the fan tap

The factory setting of the fan tap is "Standard".
Change the fan tap to "High Speed 1" by using the function setting of the wired remote controller.

CATEGORY	NUMBER	FUNCTION	SETTING
I/U FUNCTION	02	FAN SPEED SET	HIGH SPEED 1

Invalidating the louver button

The factory setting of the louver button is "Valid".
Change the louver button to "Invalid" by using the function setting of the wired remote controller.

CATEGORY	NUMBER	FUNCTION	SETTING
FUNCTION (REMOTE CONTROLLER FUNCTION)	07	LOUVER SW	INVALID

(f) Duct connected-High static pressure type (FDU)

Models All models

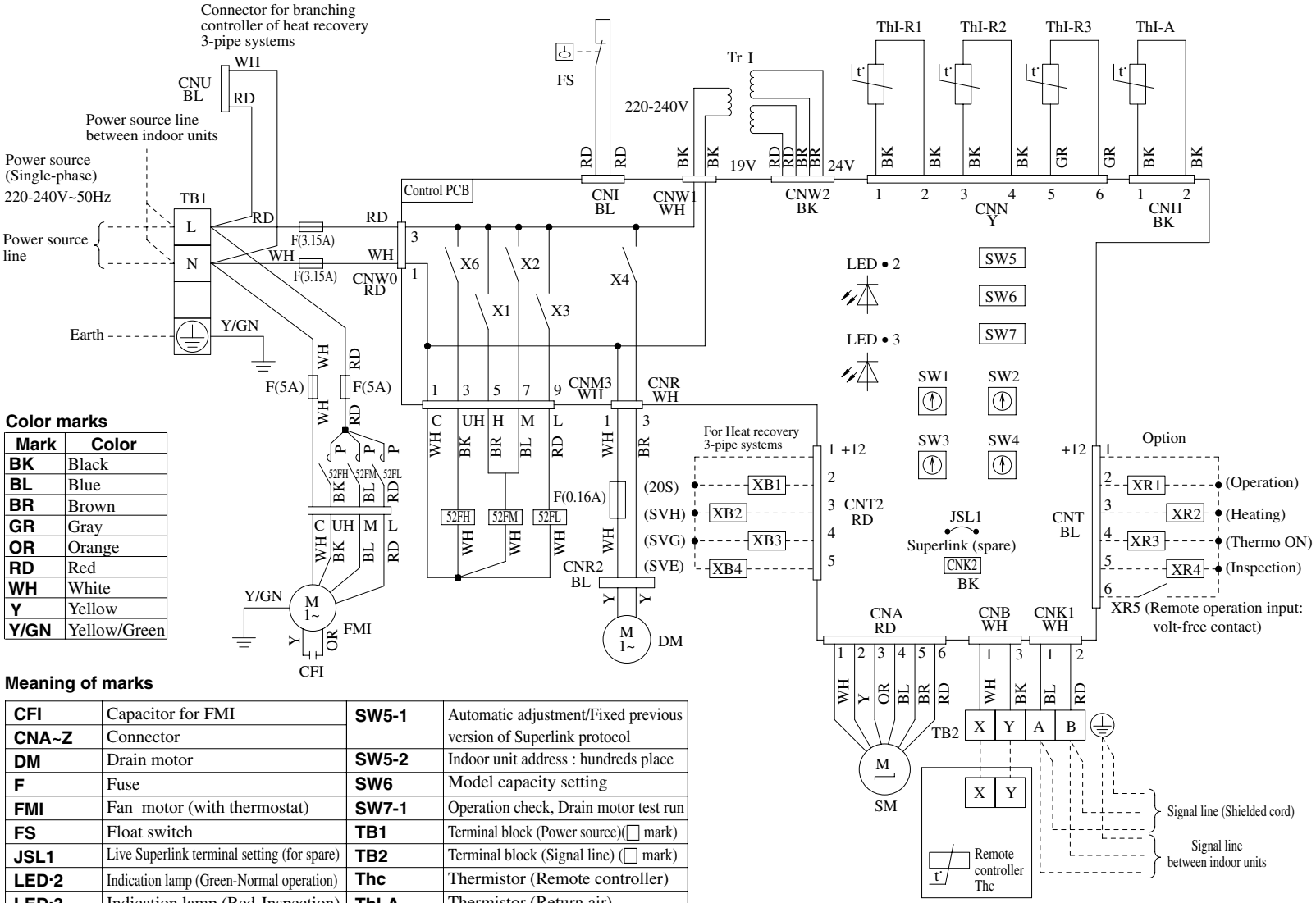

Color marks

Mark	Color
BK	Black
BL	Blue
BR	Brown
GR	Gray
OR	Orange
RD	Red
WH	White
Y	Yellow
Y/GN	Yellow/Green

Meaning of marks

CFI	Capacitor for FMI	SW5-1	Automatic adjustment/Fixed previous version of Superlink protocol
CNA~Z	Connector		
DM	Drain motor	SW5-2	Indoor unit address : hundreds place
F	Fuse	SW6	Model capacity setting
FMI	Fan motor (with thermostat)	SW7-1	Operation check, Drain motor test run
FS	Float switch	TB1	Terminal block (Power source)(□ mark)
JSL1	Live Superlink terminal setting (for spare)	TB2	Terminal block (Signal line) (□ mark)
LED·2	Indication lamp (Green-Normal operation)	Thc	Thermistor (Remote controller)
LED·3	Indication lamp (Red-Inspection)	ThI-A	Thermistor (Return air)
SM	Stepping motor (for electronic expansion valve)	ThI-R1,2,3	Thermistor (Heat exchanger)
		TrI	Thermistor
SW1	Indoor unit address : tens place	X1~3,6	Relay for FM
SW2	Indoor unit address : ones place	X4	Relay for DM
SW3	Outdoor unit address : tens place	■ mark	Closed-end connector
SW4	Outdoor unit address : ones place	52FL,FM,FH	Electromagnetic contactor for FMI

Notes

1. ——indicates wiring on site.
2. Use twin core cord (0.75~1.25mm^2) at signal line between indoor unit and outdoor unit, and signal line between indoor units.
3. Use twin core cord (0.3mm^2) at remote controller line. See spec sheet of remote controller in case that the total length is more than 100m.
4. Do not put signal line and remote controller line alongside power source line.

(g) Duct connected-Low/Middle static pressure type (FDUM)

Models FDUM22KXE6, 28KXE6, 36KXE6, 45KXE6, 56KXE6, 71KXE6, 90KXE6

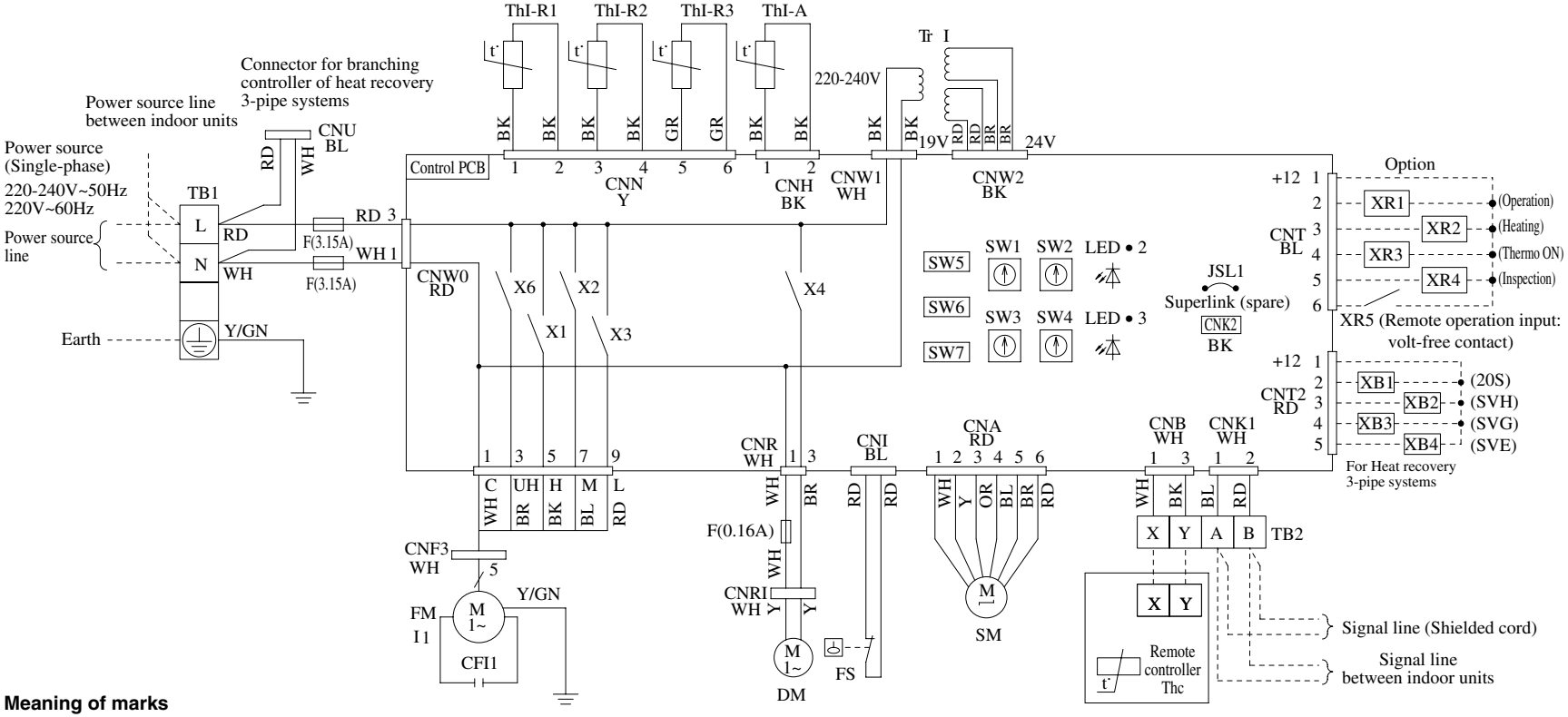

Meaning of marks

CFI1	Capacitor for FMI	**SW5-1**	Automatic adjustment/Fixed previous version of Superlink protocol
CNA~Z	Connector		
DM	Drain motor	**SW5-2**	Indoor unit address : hundreds place
F	Fuse	**SW6**	Model capacity setting
FMI1	Fan motor (with thermostat)	**SW7-1**	Operation check, Drain motor test run
FS	Float switch		
JSL1	Live Superlink terminal setting (for spare)	**TB1**	Terminal block (Power source) (□ mark)
LED·2	Indication lamp (Green-Normal operation)	**TB2**	Terminal block (Signal line) (□ mark)
		Thc	Thermistor (Remote controller)
LED·3	Indication lamp (Red-Inspection)	**ThI-A**	Thermistor (Return air)
SM	Stepping motor (for electronic expansion valve)	**ThI-R1,2,3**	Thermistor (Heat exchanger)
		TrI	Thermistor
SW1	Indoor unit address : tens place	**X1~3,6**	Relay for FM
SW2	Indoor unit address : ones place	**X4**	Relay for DM
SW3	Outdoor unit address : tens place	**■ mark**	Closed-end connector
SW4	Outdoor unit address : ones place		

Color marks

Mark	Color
BK	Black
BL	Blue
BR	Brown
GR	Gray
OR	Orange
RD	Red
WH	White
Y	Yellow
Y/GN	Yellow/Green

Notes

1. ——indicates wiring on site.
2. Use twin core cord (0.75~1.25mm^2) at signal line between indoor unit and outdoor unit, and signal line between indoor units.
3. Use twin core cord (0.3mm^2) at remote controller line. See spec sheet of remote controller in case that the total length is more than 100m.
4. Do not put signal line and remote controller line alongside power source line.

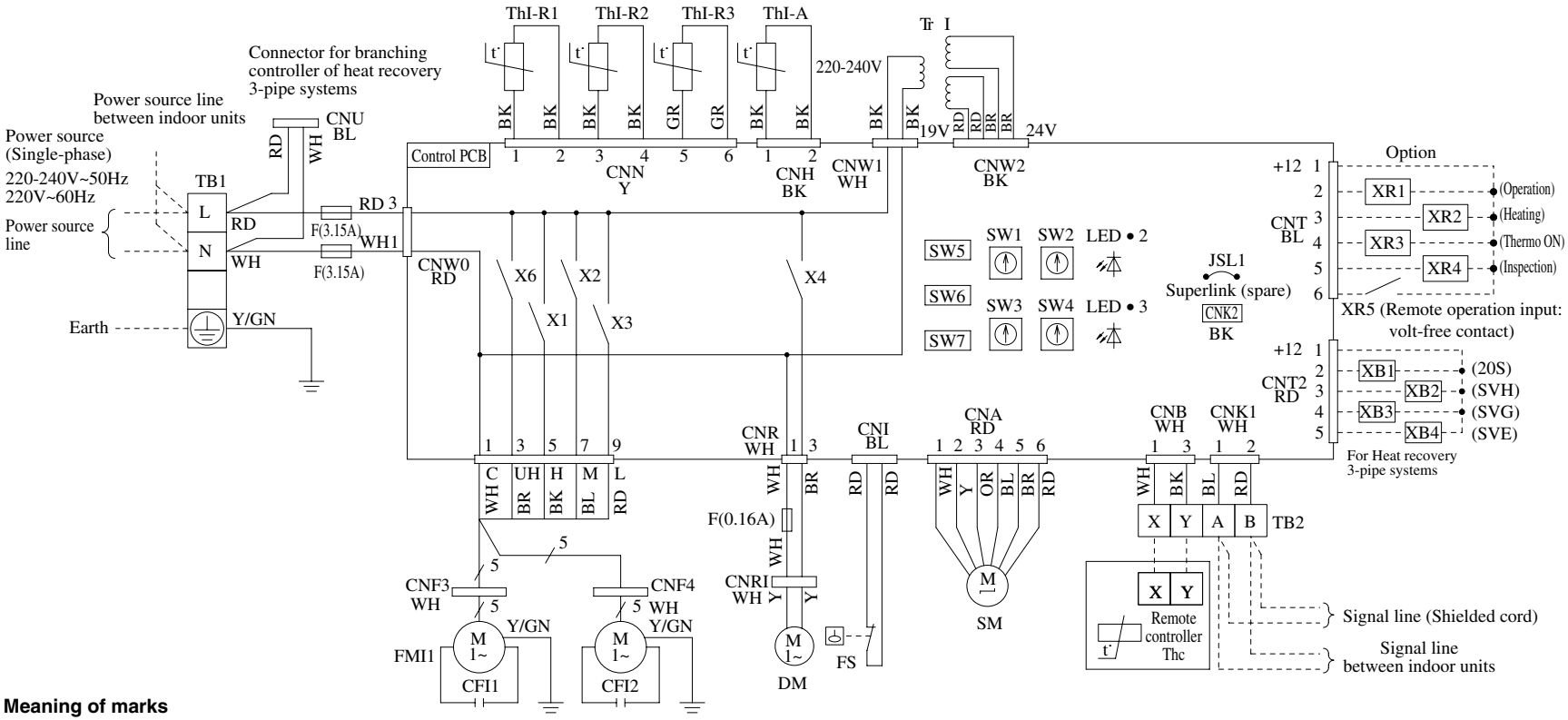

Meaning of marks

CFI1,2	Capacitor for FMI	**SW5-1**	Automatic adjustment/Fixed previous version of Superlink protocol
CNA~Z	Connector		
DM	Drain motor	**SW5-2**	Indoor unit address : hundreds place
F	Fuse	**SW6**	Model capacity setting
FMI1,2	Fan motor (with thermostat)	**SW7-1**	Operation check, Drain motor test run
FS	Float switch		
JSL1	Live Superlink terminal setting (for spare)	**TB1**	Terminal block (Power source) (□ mark)
LED·2	Indication lamp (Green-Normal operation)	**TB2**	Terminal block (Signal line) (□ mark)
		Thc	Thermistor (Remote controller)
LED·3	Indication lamp (Red-Inspection)	**ThI-A**	Thermistor (Return air)
SM	Stepping motor (for electronic expansion valve)	**ThI-R1,2,3**	Thermistor (Heat exchanger)
		TrI	Thermistor
SW1	Indoor unit address : tens place	**X1~3,6**	Relay for FM
SW2	Indoor unit address : ones place	**X4**	Relay for DM
SW3	Outdoor unit address : tens place	**■ mark**	Closed-end connector
SW4	Outdoor unit address : ones place		

Color marks

Mark	Color
BK	Black
BL	Blue
BR	Brown
GR	Gray
OR	Orange
RD	Red
WH	White
Y	Yellow
Y/GN	Yellow/Green

Notes

1. — —indicates wiring on site.
2. Use twin core cord (0.75~1.25mm^2) at signal line between indoor unit and outdoor unit, and signal line between indoor units.
3. Use twin core cord (0.3mm^2) at remote controller line. See spec sheet of remote controller in case that the total length is more than 100m.
4. Do not put signal line and remote controller line alongside power source line.

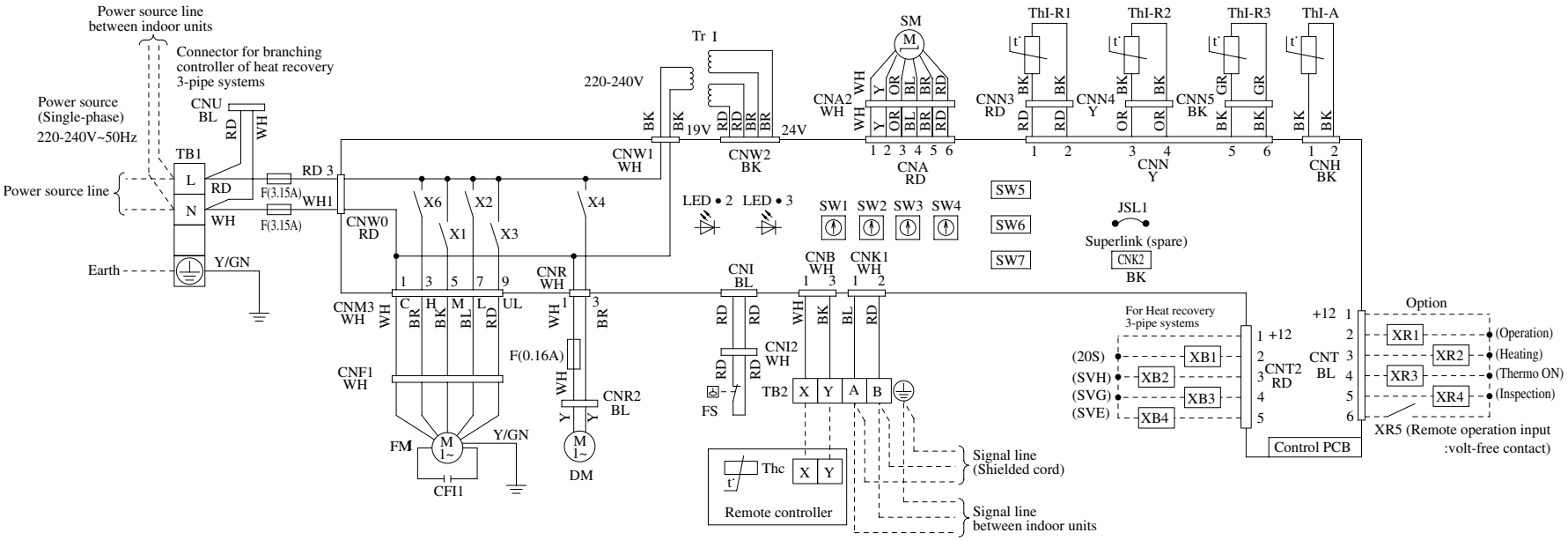

Notes

1. ——indicates wiring on site.
2. Use twin core cord (0.75~1.25mm^2) at signal line between indoor unit and outdoor unit, and signal line between indoor units.
3. Use twin core cord (0.3mm^2) at remote controller line. See spec sheet of remote controller in case that the total length is more than 100m.
4. Do not put signal line and remote controller line alongside power source line.

Meaning of marks

CFI	Capacitor for FMI
CNA~Z	Connector
DM	Drain motor
F	Fuse
FMI	Fan motor (with thermostat)
FS	Float switch
JSL1	Live Superlink terminal setting (for spare)
LED·2	Indication lamp (Green-Normal operation)
LED·3	Indication lamp (Red-Inspection)

SM	Stepping motor (for electronic expansion valve)
SW1	Indoor unit address : tens place
SW2	Indoor unit address : ones place
SW3	Outdoor unit address : tens place
SW4	Outdoor unit address : ones place
SW5-1	Automatic adjustment/Fixed previous version of Superlink protocol
SW5-2	Indoor unit address : hundreds place
SW6	Model capacity setting

SW7-1	Operation check, Drain motor test run
TB1	Terminal block (Power source) (□ mark)
TB2	Terminal block (Signal line) (□ mark)
Thc	Thermistor (Remote controller)
ThI-A	Thermistor (Return air)
ThI-R1,2,3	Thermistor (Heat exchanger)
TrI	Thermistor
X1~3,6	Relay for FM
X4	Relay for DM

Color marks

Mark	Color	Mark	Color
BK	Black	**RD**	Red
BL	Blue	**WH**	White
BR	Brown	**Y**	Yellow
GR	Gray	**Y/GN**	Yellow/Green
OR	Orange		

(i) Wall mounted type (FDK)

Models FDK22KXE6, 28KXE6, 36KXE6, 45KXE6, 56KXE6

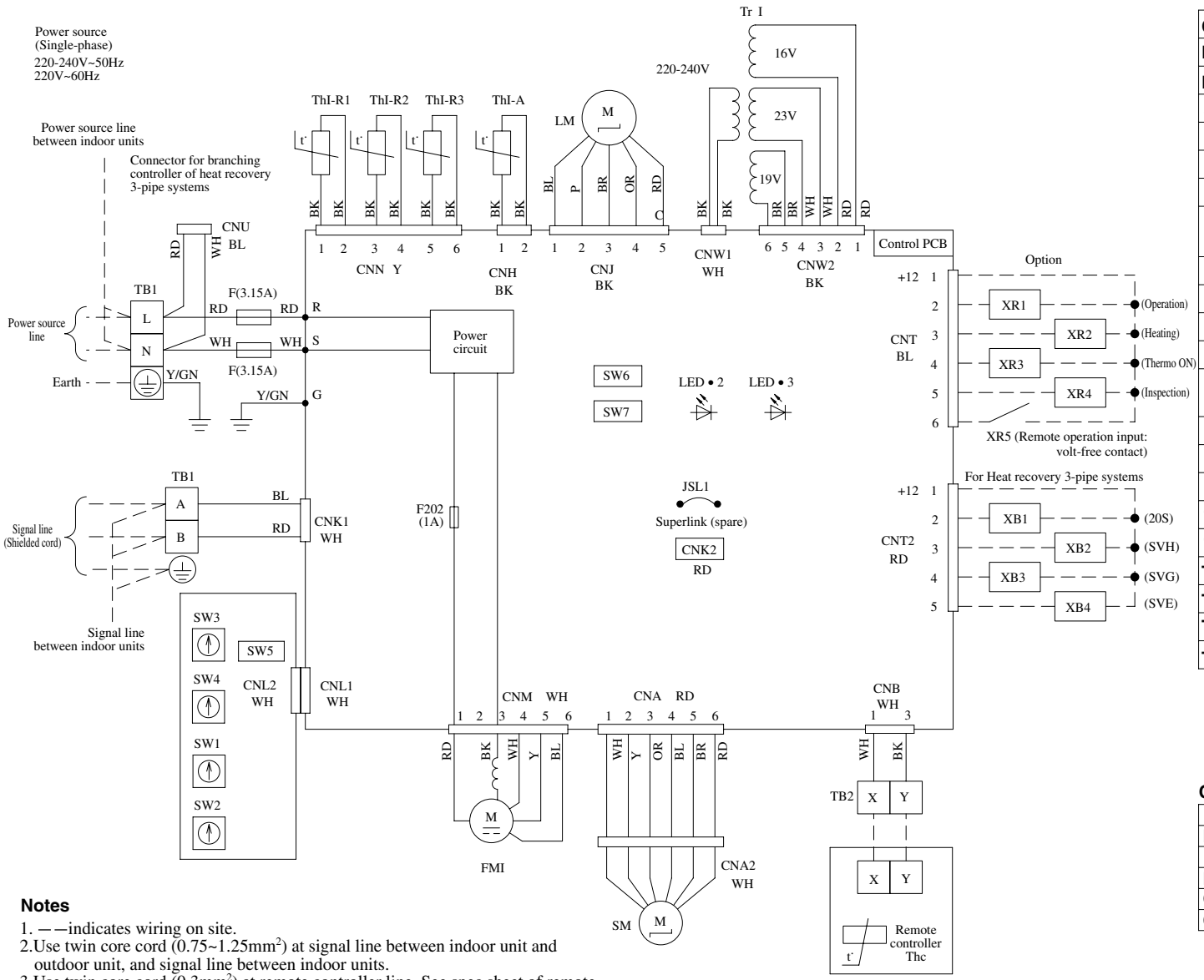

Meaning of marks

CNA~Z	Connector
F,F202	Fuse
FMI	Fan motor (with thermostat)
JSL1	Live Superlink terminal setting (for spare)
LED·2	Indication lamp (Green-Normal operation)
LED·3	Indication lamp (Red-Inspection)
LM	Louver motor
SM	Stepping motor (for electronic expansion valve)
SW1	Indoor unit address : tens place
SW2	Indoor unit address : ones place
SW3	Outdoor unit address : tens place
SW4	Outdoor unit address : ones place
SW5-1	Automatic adjustment/Fixed previous version of Superlink protocol
SW5-2	Indoor unit address : hundreds place
SW6	Model capacity setting
SW7-1	Operation check, Drain motor test run
TB1	Terminal block (□ mark)
TB2	Thermistor (Remote controller) (□ mark)
Thc	Thermistor (Remote controller)
ThI-A	Thermistor (Return air)
ThI-R1,2,3	Thermistor (Heat exchanger)
TrI	Thermistor

Color marks

Mark	Color	Mark	Color
BK	Black	**P**	Pink
BL	Blue	**RD**	Red
BR	Brown	**WH**	White
GN	Green	**Y**	Yellow
OR	Orange	**Y/GN**	Yellow/Green

Notes

1. ——indicates wiring on site.
2. Use twin core cord (0.75~1.25mm^2) at signal line between indoor unit and outdoor unit, and signal line between indoor units.
3. Use twin core cord (0.3mm^2) at remote controller line. See spec sheet of remote controller in case that the total length is more than 100m.
4. Do not put signal line and remote controller line alongside power source line.

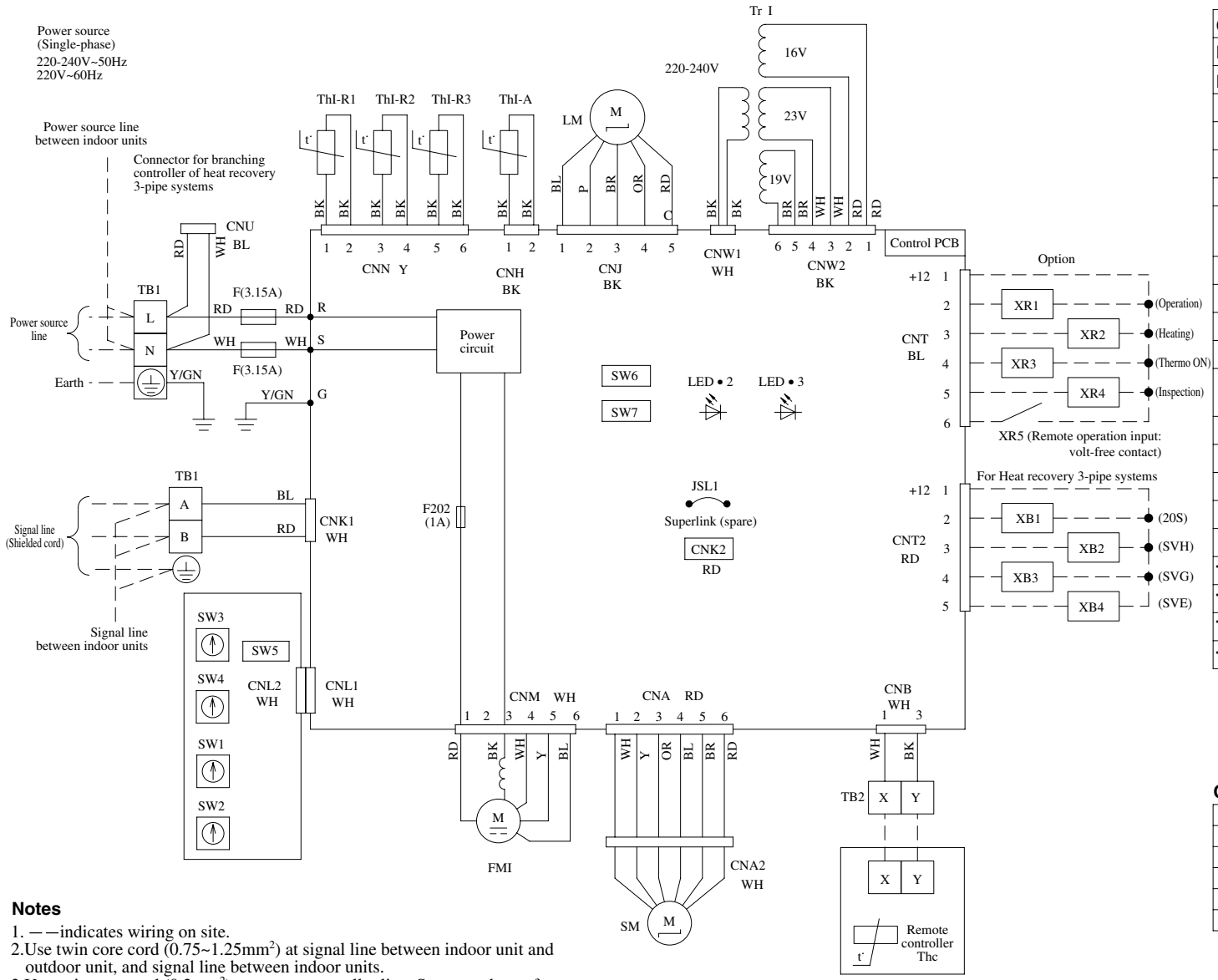

Meaning of marks

CNA~Z	Connector
F,F202	Fuse
FMI	Fan motor (with thermostat)
JSL1	Live Superlink terminal setting (for spare)
LED·2	Indication lamp (Green-Normal operation)
LED·3	Indication lamp (Red-Inspection)
LM	Louver motor
SM	Stepping motor (for electronic expansion valve)
SW1	Indoor unit address : tens place
SW2	Indoor unit address : ones place
SW3	Outdoor unit address : tens place
SW4	Outdoor unit address : ones place
SW5-1	Automatic adjustment/Fixed previous version of Superlink protocol
SW5-2	Indoor unit address : hundreds place
SW6	Model capacity setting
SW7-1	Operation check, Drain motor test run
TB1	Terminal block (□ mark)
TB2	Thermistor (Remote controller) (□ mark)
Thc	Thermistor (Remote controller)
ThI-A	Thermistor (Return air)
ThI-R1,2,3	Thermistor (Heat exchanger)
TrI	Thermistor

Color marks

Mark	Color	Mark	Color
BK	Black	**P**	Pink
BL	Blue	**RD**	Red
BR	Brown	**WH**	White
GN	Green	**Y**	Yellow
OR	Orange	**Y/GN**	Yellow/Green

Notes

1. ——indicates wiring on site.
2. Use twin core cord (0.75~1.25mm^2) at signal line between indoor unit and outdoor unit, and signal line between indoor units.
3. Use twin core cord (0.3mm^2) at remote controller line. See spec sheet of remote controller in case that the total length is more than 100m.
4. Do not put signal line and remote controller line alongside power source line.

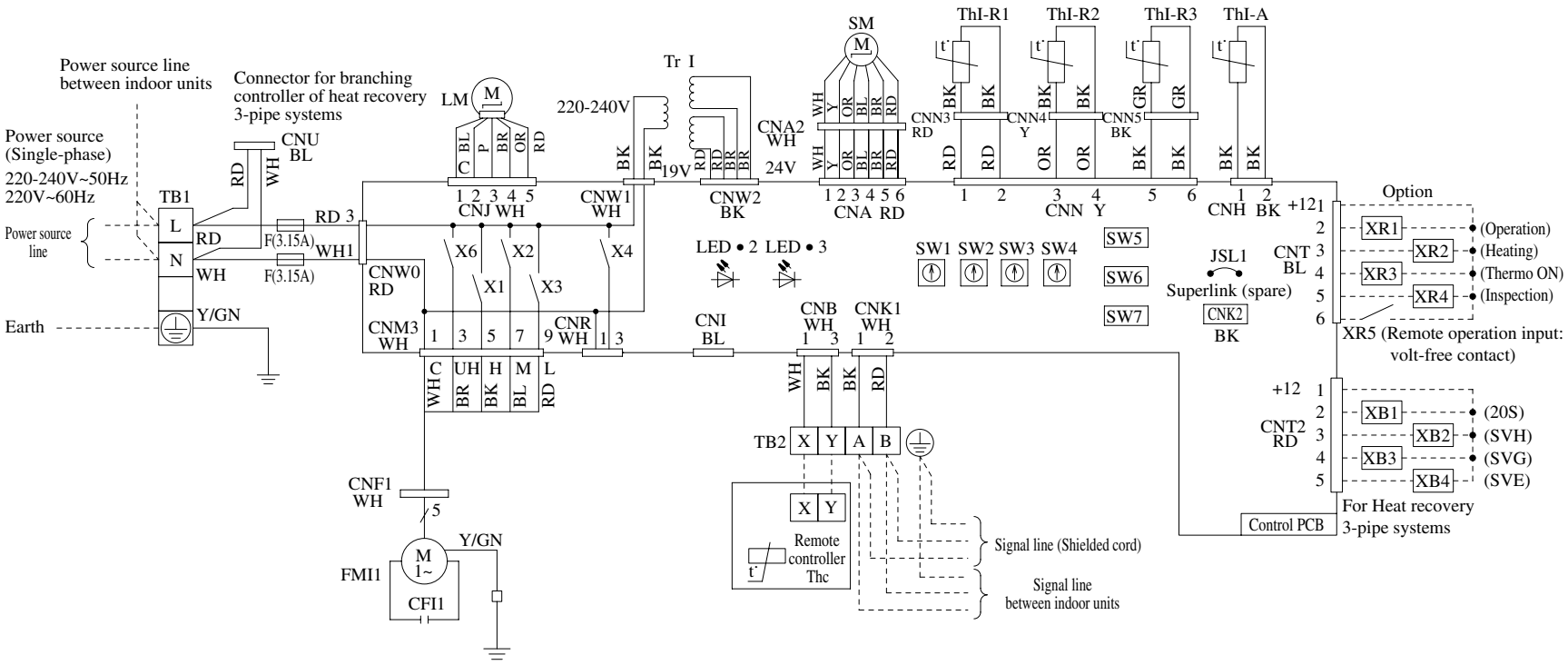

Meaning of marks

CFI1,2	Capacitor for FMI	**SW5-1**	Automatic adjustment/Fixed previous version of Superlink protocol
CNA~Z	Connector	**SW5-2**	Indoor unit address : hundreds place
F	Fuse	**SW6**	Model capacity setting
FMI1,2	Fan motor (with thermostat)	**SW7-1**	Operation check, Drain motor test run
JSL1	Live Superlink terminal setting (for spare)	**TB1**	Terminal block (Power source) (□ mark)
LED·2	Indication lamp (Green-Normal operation)	**TB2**	Terminal block (Signal line) (□ mark)
LED·3	Indication lamp (Red-Inspection)	**Thc**	Thermistor (Remote controller)
LM	Louver motor	**ThI-A**	Thermistor (Return air)
SM	Stepping motor (for electronic expansion valve)	**ThI-R1,2,3**	Thermistor (Heat exchanger)
SW1	Indoor unit address : tens place	**TrI**	Thermistor
SW2	Indoor unit address : ones place	**X1~3,6**	Relay for FM
SW3	Outdoor unit address : tens place	**X4**	Relay for DM
SW4	Outdoor unit address : ones place		

Color marks

Mark	Color
BK	Black
BL	Blue
BR	Brown
GR	Gray
OR	Orange
P	Pink
RD	Red
WH	White
Y	Yellow
Y/GN	Yellow/Green

Notes

1. ——indicates wiring on site.
2. Use twin core cord (0.75~1.25mm^2) at signal line between indoor unit and outdoor unit, and signal line between indoor units.
3. Use twin core cord (0.3mm^2) at remote controller line. See spec sheet of remote controller in case that the total length is more than 100m.
4. Do not put signal line and remote controller line alongside power source line.

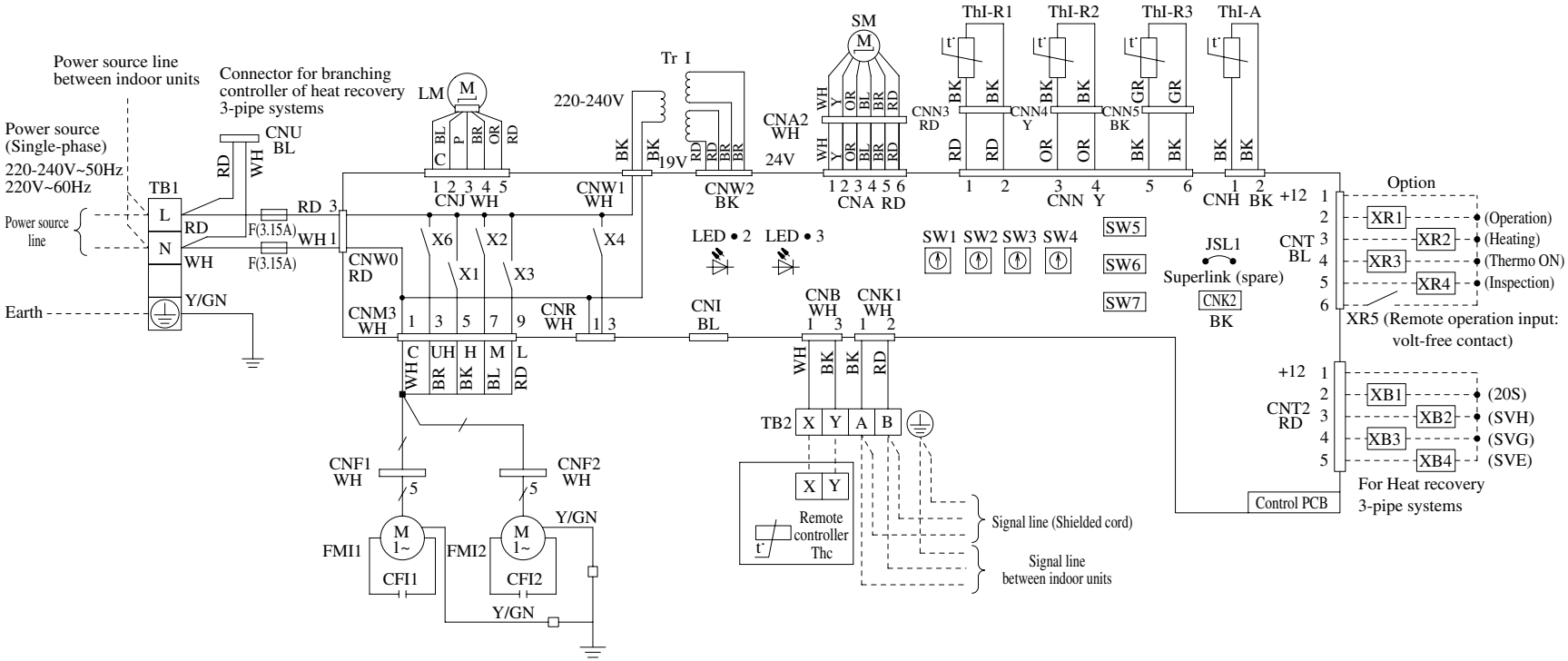

Meaning of marks

CFI1,2	Capacitor for FMI	**SW5-1**	Automatic adjustment/Fixed previous version of Superlink protocol
CNA~Z	Connector	**SW5-2**	Indoor unit address : hundreds place
F	Fuse	**SW6**	Model capacity setting
FMI1,2	Fan motor (with thermostat)	**SW7-1**	Operation check, Drain motor test run
JSL1	Live Superlink terminal setting (for spare)	**TB1**	Terminal block (Power source) (□ mark)
LED·2	Indication lamp (Green-Normal operation)	**TB2**	Terminal block (Signal line) (□ mark)
LED·3	Indication lamp (Red-Inspection)	**Thc**	Thermistor (Remote controller)
LM	Louver motor	**ThI-A**	Thermistor (Return air)
SM	Stepping motor (for electronic expansion valve)	**ThI-R1,2,3**	Thermistor (Heat exchanger)
SW1	Indoor unit address : tens place	**TrI**	Thermistor
SW2	Indoor unit address : ones place	**X1~3,6**	Relay for FM
SW3	Outdoor unit address : tens place	**X4**	Relay for DM
SW4	Outdoor unit address : ones place	**■ mark**	Closed-end connector

Color marks

Mark	Color
BK	Black
BL	Blue
BR	Brown
GR	Gray
OR	Orange
P	Pink
RD	Red
WH	White
Y	Yellow
Y/GN	Yellow/Green

Notes

1. ——indicates wiring on site.
2. Use twin core cord (0.75~1.25mm^2) at signal line between indoor unit and outdoor unit, and signal line between indoor units.
3. Use twin core cord (0.3mm^2) at remote controller line. See spec sheet of remote controller in case that the total length is more than 100m.
4. Do not put signal line and remote controller line alongside power source line.

(k) Floor standing (with casing) type (FDFL)
Models All models

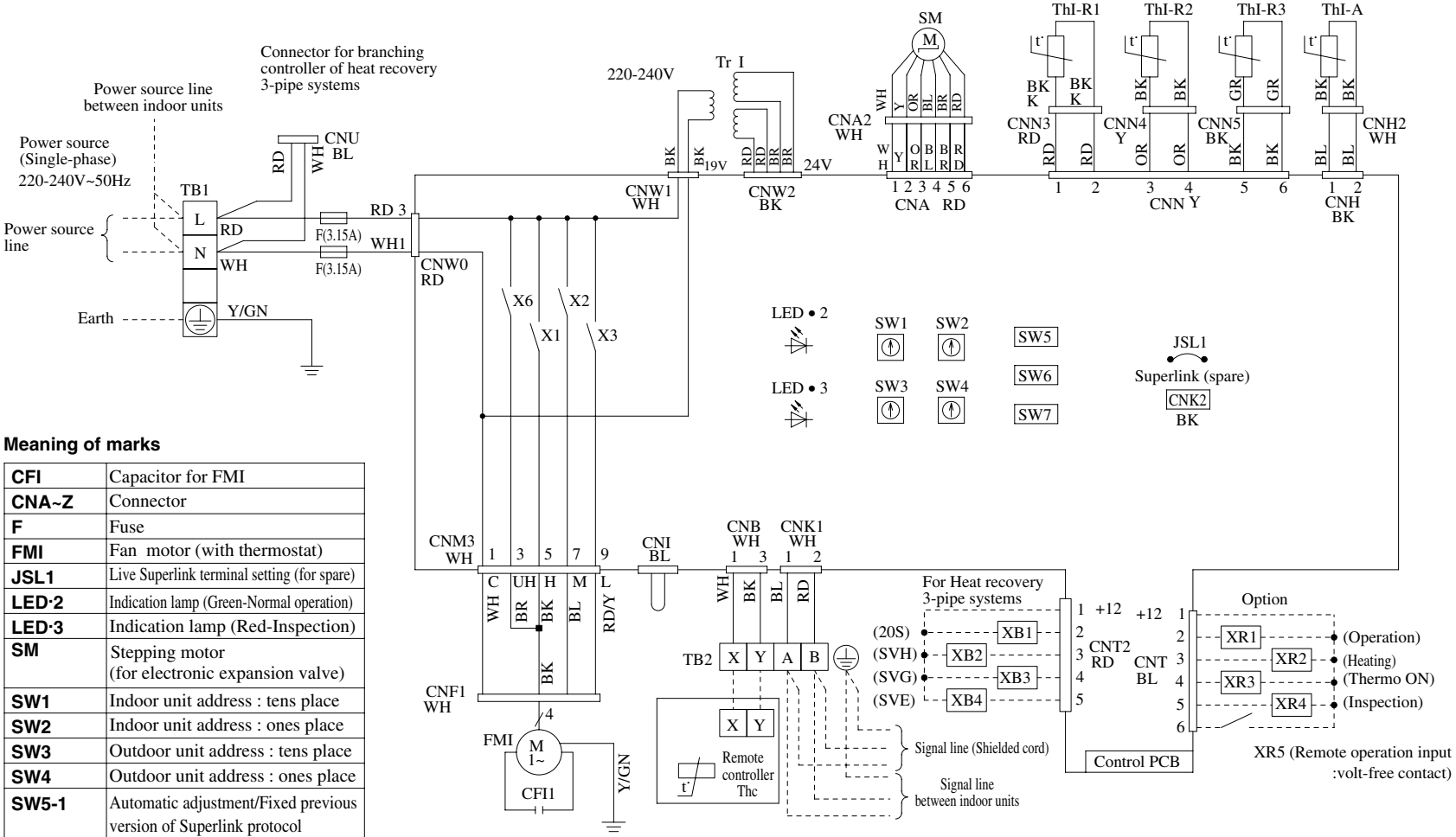

Meaning of marks

CFI	Capacitor for FMI
CNA~Z	Connector
F	Fuse
FMI	Fan motor (with thermostat)
JSL1	Live Superlink terminal setting (for spare)
LED·2	Indication lamp (Green-Normal operation)
LED·3	Indication lamp (Red-Inspection)
SM	Stepping motor (for electronic expansion valve)
SW1	Indoor unit address : tens place
SW2	Indoor unit address : ones place
SW3	Outdoor unit address : tens place
SW4	Outdoor unit address : ones place
SW5-1	Automatic adjustment/Fixed previous version of Superlink protocol
SW5-2	Indoor unit address : hundreds place
SW6	Model capacity setting
SW7-1	Operation check, Drain motor test run
TB1	Terminal block (Power source)(□ mark)
TB2	Terminal block (Signal line) (□ mark)
Thc	Thermistor (Remote controller)
ThI-A	Thermistor (Return air)
ThI-R1,2,3	Thermistor (Heat exchanger)
TrI	Thermistor
X1~3,6	Relay for FM
■ mark	Closed-end connector

Color marks

Mark	Color	Mark	Color
BK	Black	**RD**	Red
BL	Blue	**RD/Y**	Red/Yellow
BR	Brown	**WH**	White
GR	Gray	**Y**	Yellow
OR	Orange	**Y/GN**	Yellow/Green

Notes

1. — —indicates wiring on site.
2. Use twin core cord (0.75~1.25mm^2) at signal line between indoor unit and outdoor unit, and signal line between indoor units.
3. Use twin core cord (0.3mm^2) at remote controller line. See spec sheet of remote controller in case that the total length is more than 100m.
4. Do not put signal line and remote controller line alongside power source line.

(I) Floor standing (without casing) type (FDFU)
Models All models

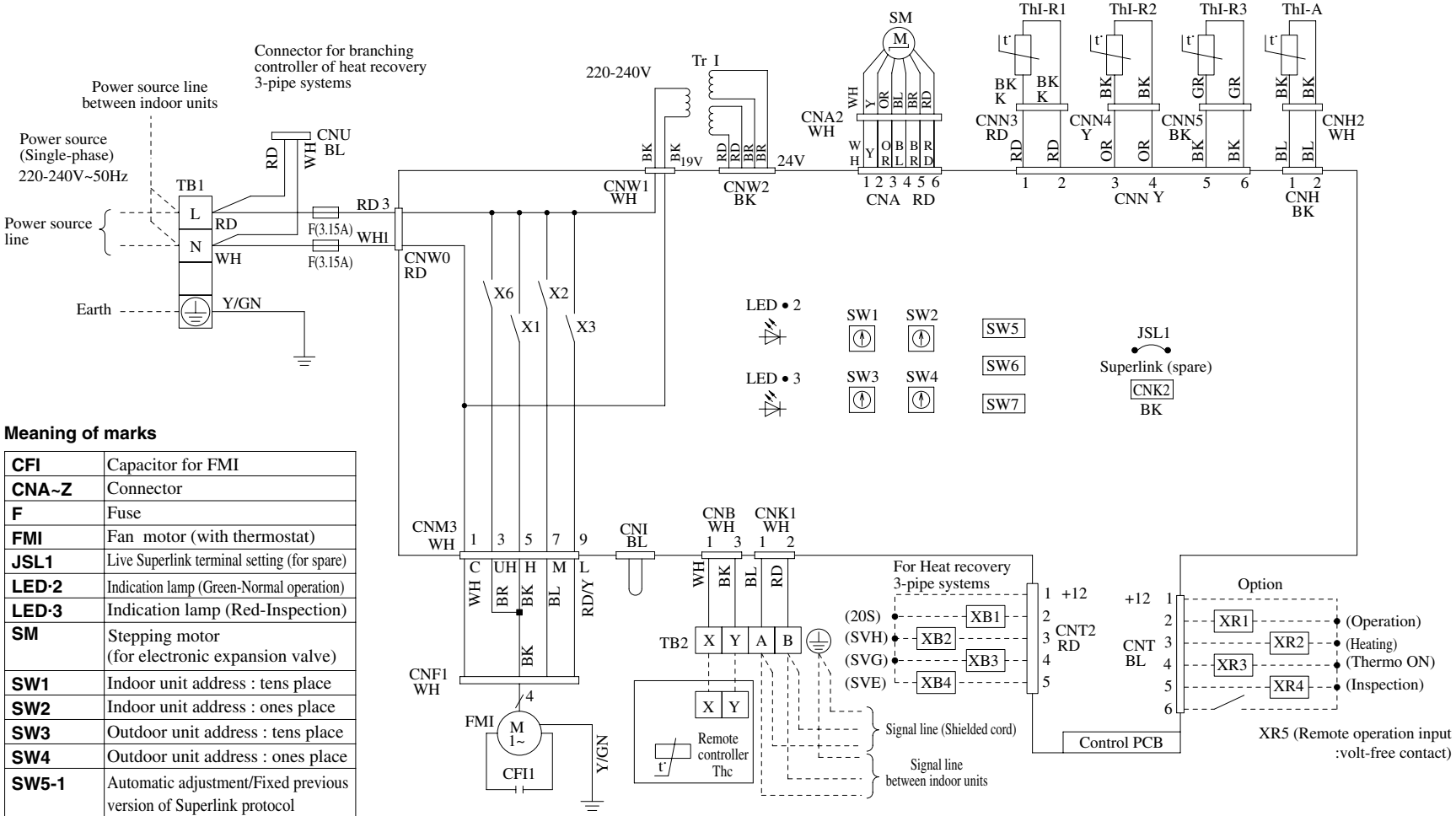

Meaning of marks

CFI	Capacitor for FMI
CNA~Z	Connector
F	Fuse
FMI	Fan motor (with thermostat)
JSL1	Live Superlink terminal setting (for spare)
LED·2	Indication lamp (Green-Normal operation)
LED·3	Indication lamp (Red-Inspection)
SM	Stepping motor (for electronic expansion valve)
SW1	Indoor unit address : tens place
SW2	Indoor unit address : ones place
SW3	Outdoor unit address : tens place
SW4	Outdoor unit address : ones place
SW5-1	Automatic adjustment/Fixed previous version of Superlink protocol
SW5-2	Indoor unit address : hundreds place
SW6	Model capacity setting
SW7-1	Operation check, Drain motor test run
TB1	Terminal block (Power source)(□ mark)
TB2	Terminal block (Signal line) (□ mark)
Thc	Thermistor (Remote controller)
ThI-A	Thermistor (Return air)
ThI-R1,2,3	Thermistor (Heat exchanger)
TrI	Thermistor
X1~3,6	Relay for FM
■ mark	Closed-end connector

Color marks

Mark	Color	Mark	Color
BK	Black	**RD**	Red
BL	Blue	**RD/Y**	Red/Yellow
BR	Brown	**WH**	White
GR	Gray	**Y**	Yellow
OR	Orange	**Y/GN**	Yellow/Green

Notes

1. ——indicates wiring on site.
2. Use twin core cord (0.75~1.25mm^2) at signal line between indoor unit and outdoor unit, and signal line between indoor units.
3. Use twin core cord (0.3mm^2) at remote controller line. See spec sheet of remote controller in case that the total length is more than 100m.
4. Do not put signal line and remote controller line alongside power source line.

3.4 Exterior appearance

(a) Ceiling cassette-4 way type (FDT)

- Decorative panel

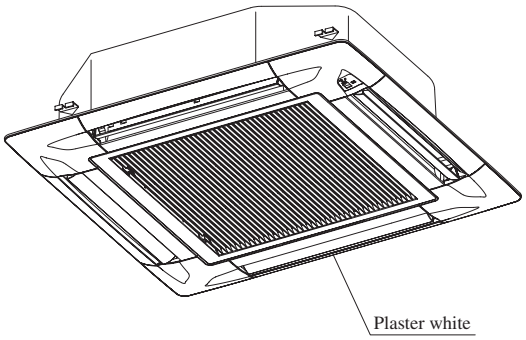

(b) Ceiling cassette-4 way compact type (FDTC)

- Decorative panel

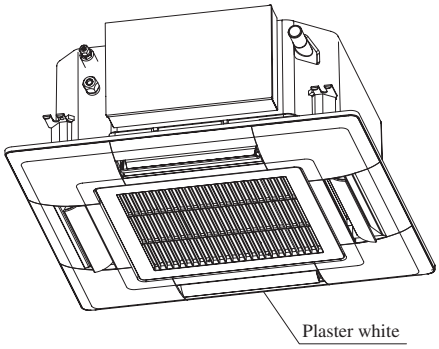

(c) Ceiling cassette-2 way type (FDTW)

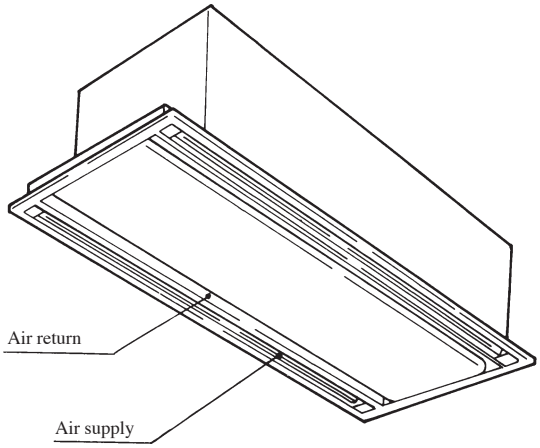

- Decorative panel

  Standard type

Panel part No.	Type	Panel color	Applicable model
TW-PSA-24W-E	With Auto swing	Plaster white	FDTW28, 45, 56
TW-PSA-34W-E			FDTW71, 90
TW-PSA-44W-E			FDTW112, 140

(d) Ceiling cassette-1 way type (FDTS)

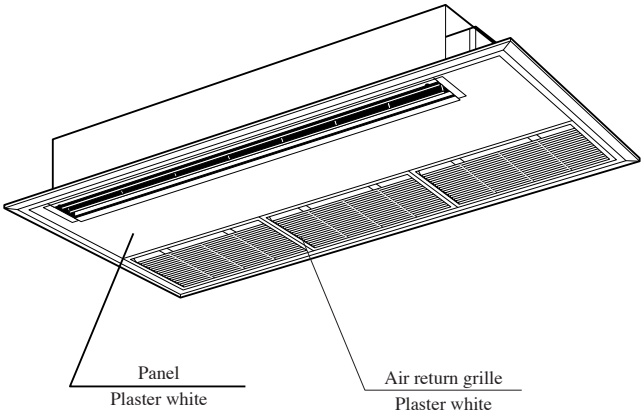

- Decorative panel

Panel part No.	Type	Panel color	Applicable model
TS-PSA-29W-E	With Auto swing	Plaster white	FDTS45
TS-PSA-39W-E			FDTS71

(e) Ceiling cassette-1 way type (FDTQ)

This illustration shows the direct blow panel (TQ-PSA-15W-E). Painting color is the same for other panels.

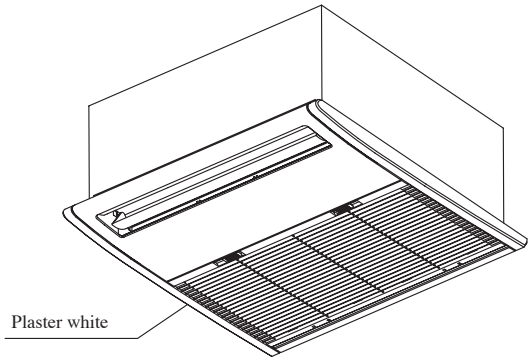

- Decorative panel

Panel part No.		Type	Panel color	Applicable model
Direct blow panel	TQ-PSA-15W-E	With Auto swing	Plaster white	FDTQ22, 28, 36
	TQ-PSB-15W-E			
Duct panel	QR-PNA-14W-ER	Non Auto swing	Plaster white	FDTQ22, 28, 36
	QR-PNB-14W-ER			

(f) **Duct connected-High static pressure type (FDU).....Zinc steel plate**

(g) **Duct connected-Low/Middle static pressure type (FDUM) ..... Zinc steel plate**

(h) **Duct connected (Ultra thin)-Low static pressure type (FDQS).....Zinc steel plate**

(i) **Ceiling suspension type (FDE)**

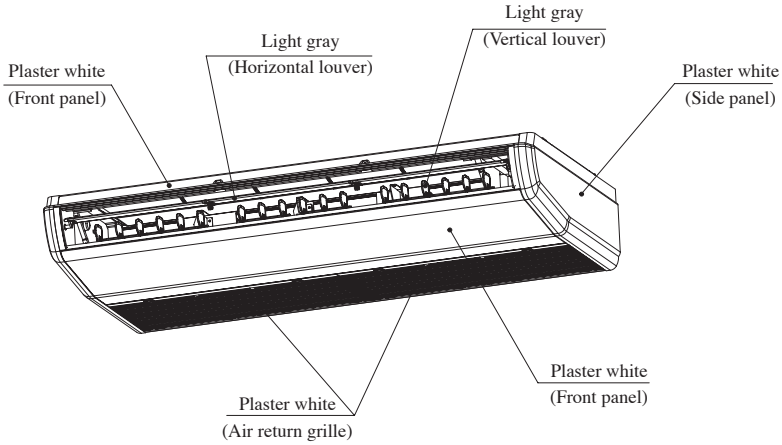

(j) **Wall mounted type (FDK)**

Models FDK22, 28, 36, 45, 56KXE6

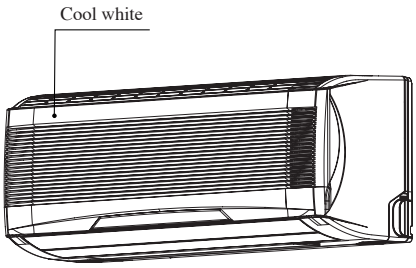

Model FDK71KXE6

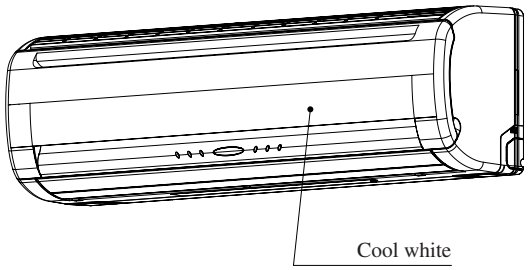

(k) **Floor standing (with casing) type (FDFL)**

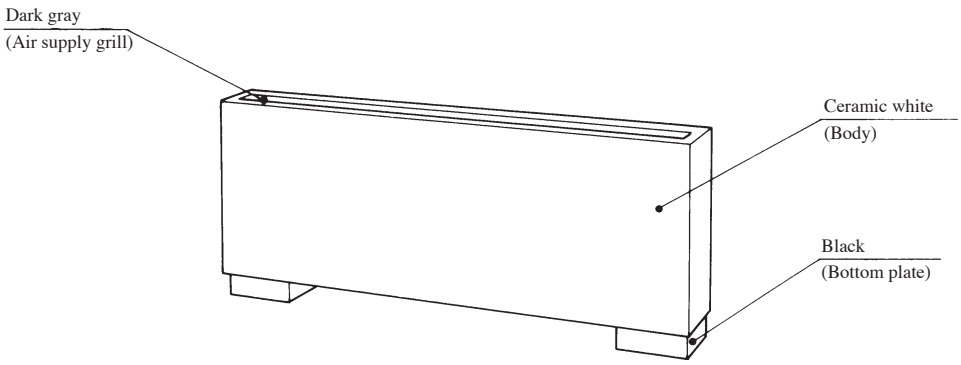

(l) **Floor standing (without casing) type (FDFU) ..... Zinc steel plate**

3.5 Characteristics of fan

(1) Ceiling cassette-1 way compact type (FDTQ)

(Only when FDTQ22, 28 and 36 model are used for the Duct panel type.)

Models FDTQ22, 28 36KXE6

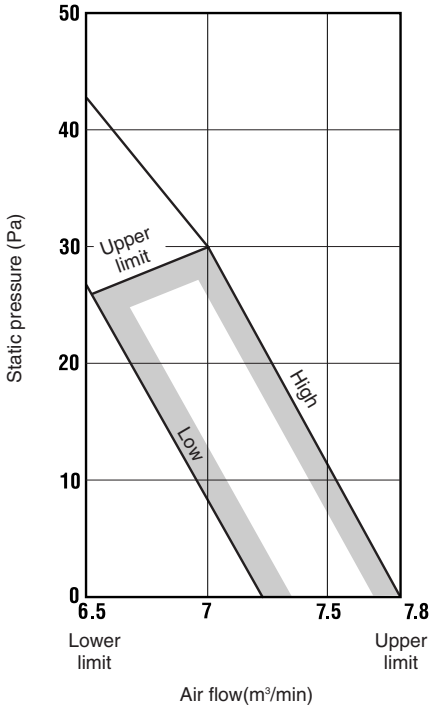

(2) Duct connected-Low/Middle static pressure (FDUM)

• External static pressure table

Unit : Pa

Model \ Air flow (m³/min) \ Duct specs.		1 spot closing		Standard		Square duct	
		Stan-dard	High (4) speed	Stan-dard	High (4) speed	Stan-dard	High (1) speed
FDUM22	10	-	-	50/40	85/90	40/45	65/75
FDUM28,36	12	-	-	50/40	85/90	40/45	65/75
FDUM45,56	14	-	-	50/40	85/90	50/45	90/90
FDUM71	18	35/30	70/85	50/40	85/100	55/100	90/100
FDUM90	20	30/25	65/80	50/45	85/100	55/50	90/105
FDUM112	28	50/50	80/90	60/60	90/100	65/65	95/105
FDUM140	34	50/45	75/90	60/55	85/100	65/65	95/105

Notes(1) 1 spot closing: Round duct flange at center is removed and shield with a special panel (option).
(2) Standard: ø200 duct are installed at all blowout holes.
(3) Square duct: All round ducts are removed and replaced with special square duct flanges (option).
(4) When setting from the remote controller, select “Hi CEILNG 1”

How to interpret the blower characteristics table

Example : Case of FDUM71KXE6

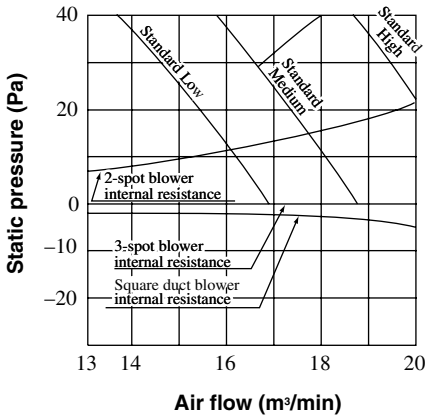

① 2-spot blowout.....
Internal resistance increases more than the standard 3-spot blowout.Approx. 14Pa at 17m³/min

② Square duct blowout.....
Internal resistance decreases more than the standard round duct (ø200 3-spot). 3Pa at 17m³/min. (External static pressure increases in reverse.)

Model FDUM22KXE6

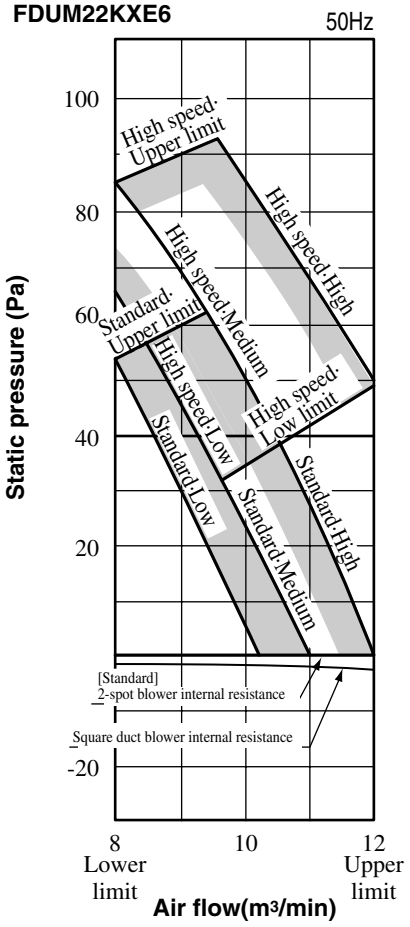

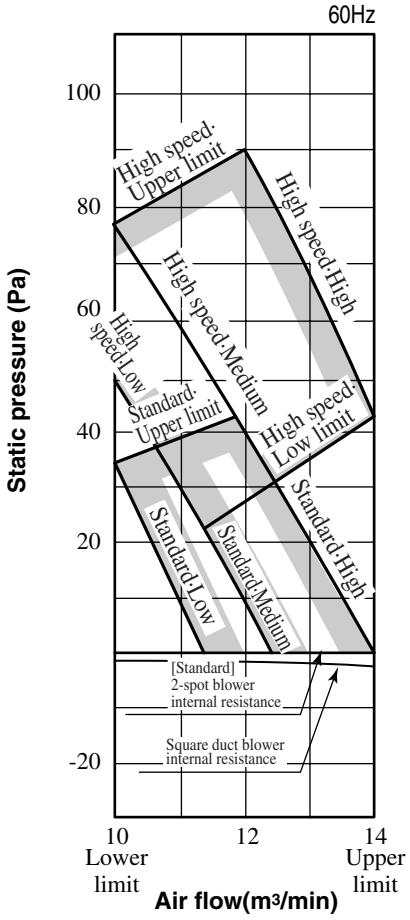

Models FDUM28KXE6,36KXE6

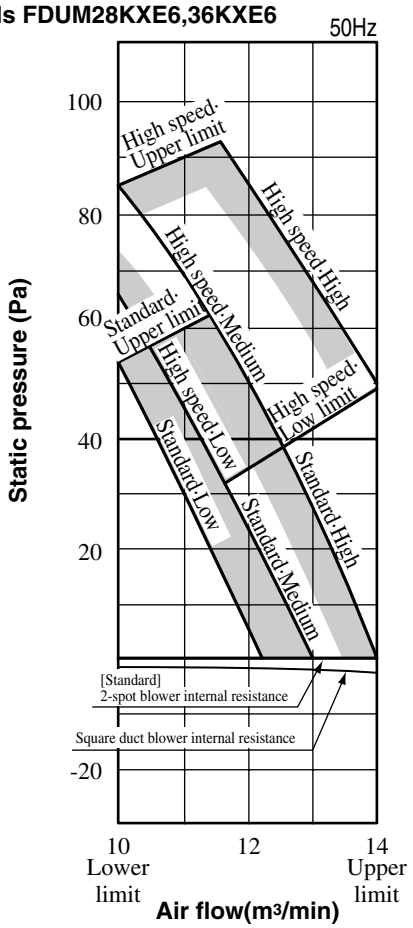

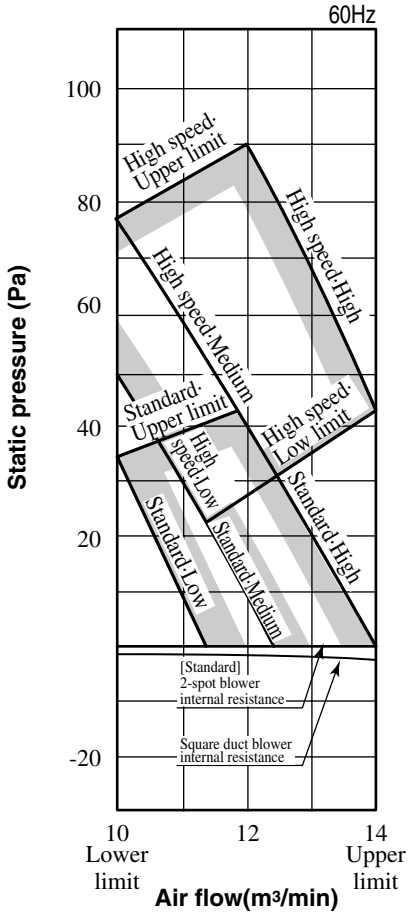

Model FDUM45KXE6, 56KXE6

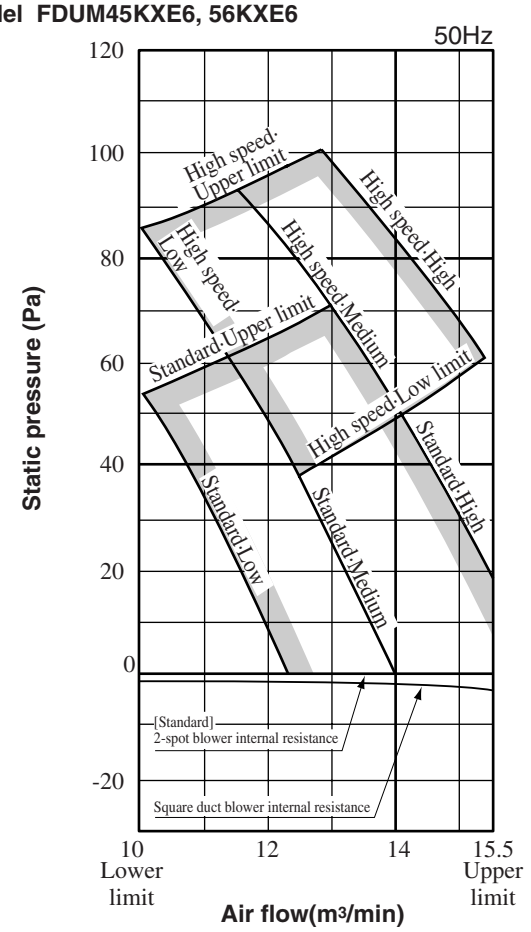

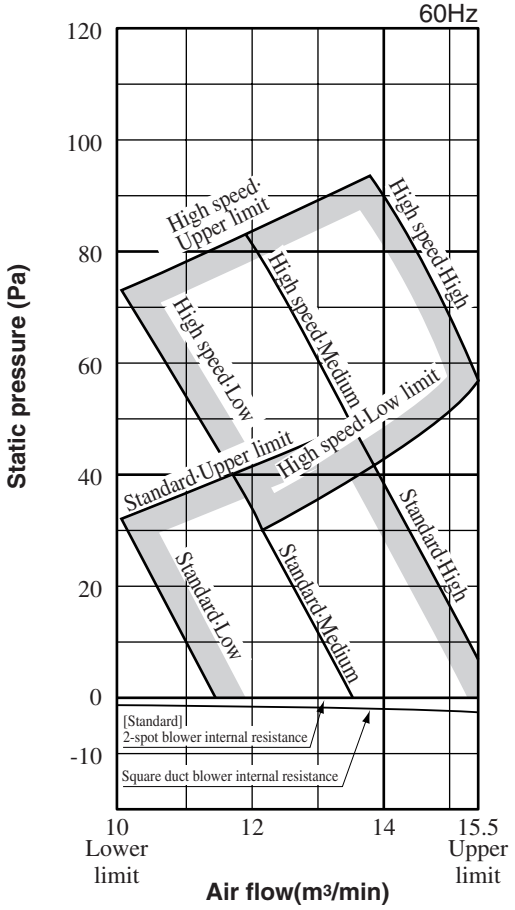

Models FDUM71KXE6

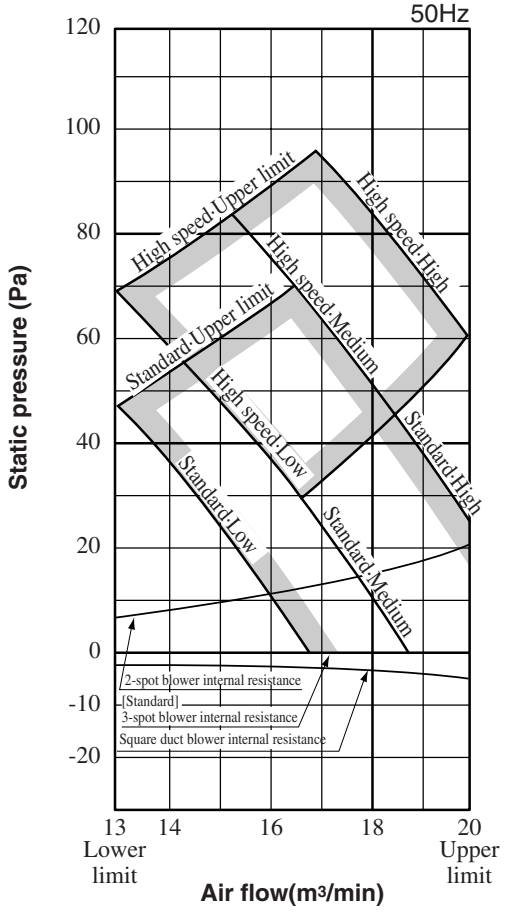

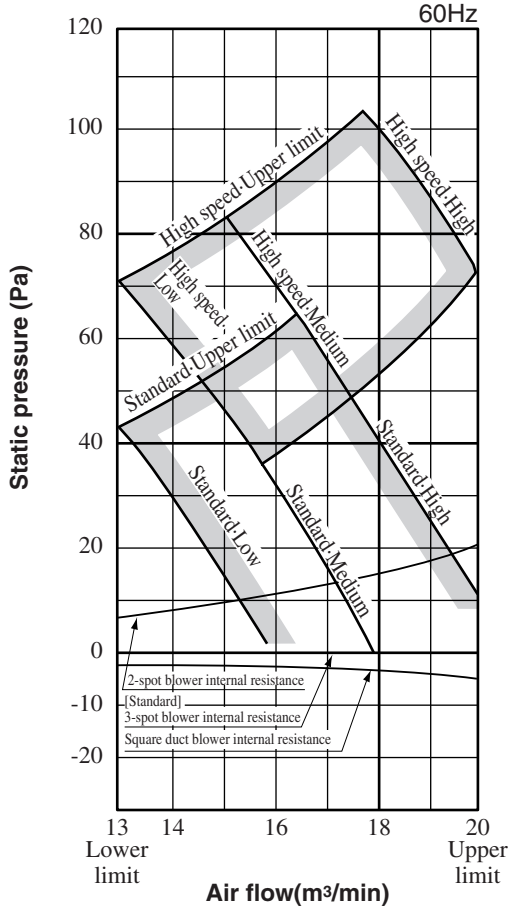

Model FDUM90KXE6

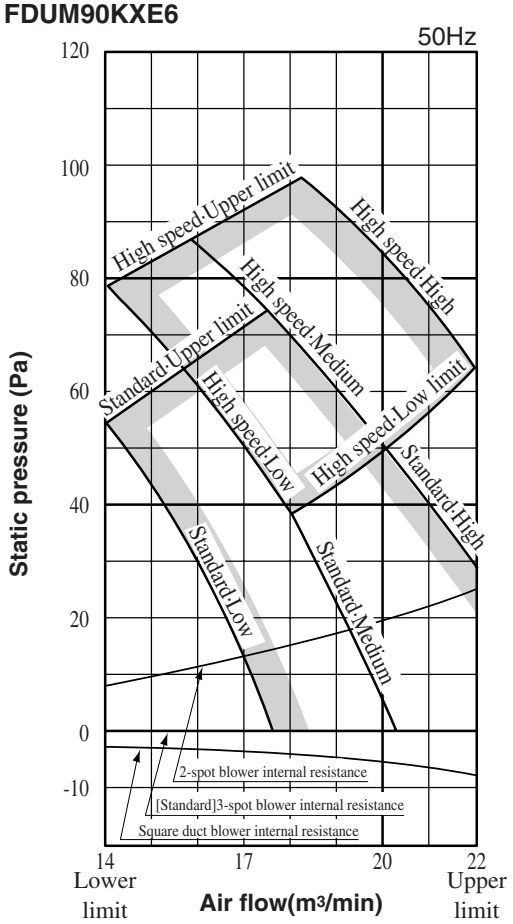

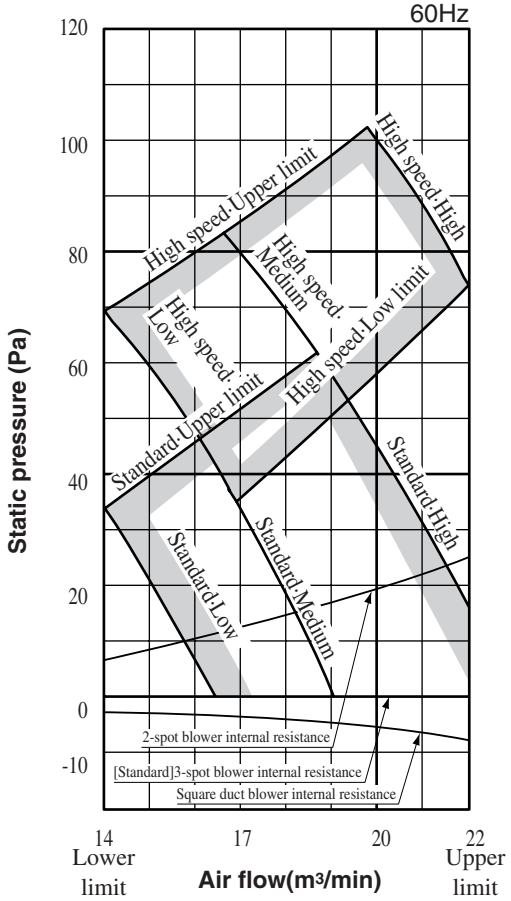

Model FDUM112KXE6

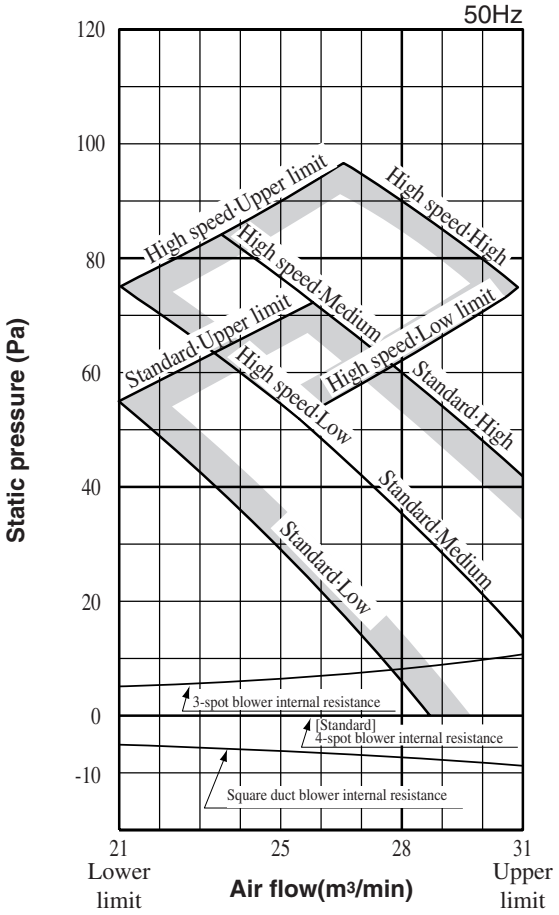

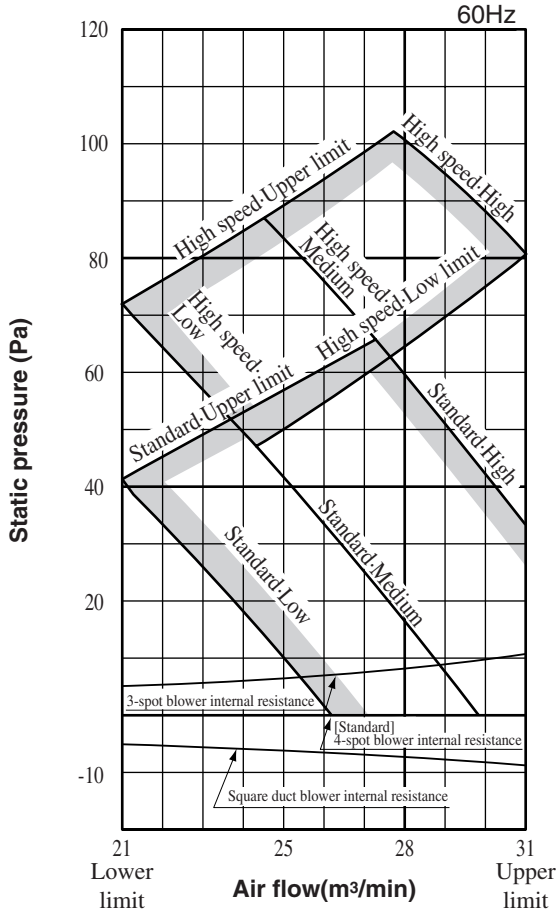

Model FDUM140KXE6

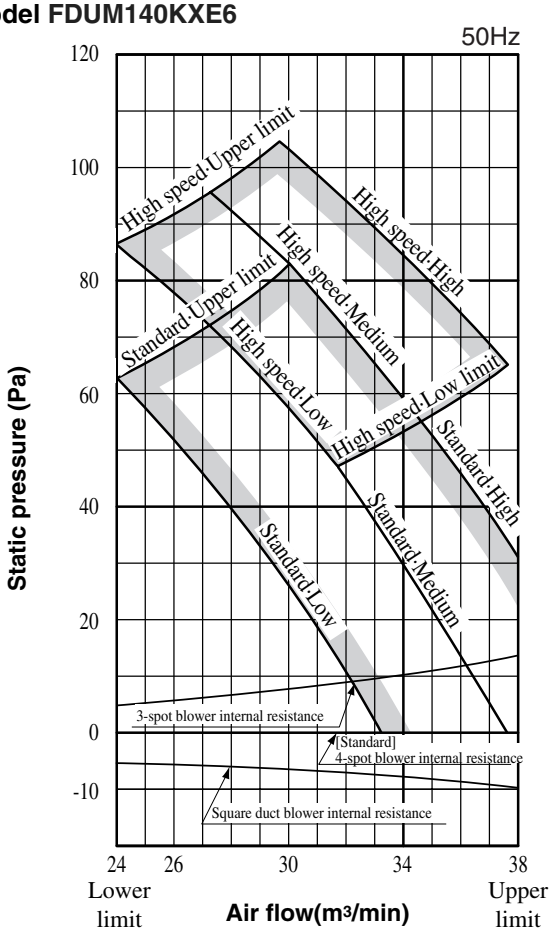

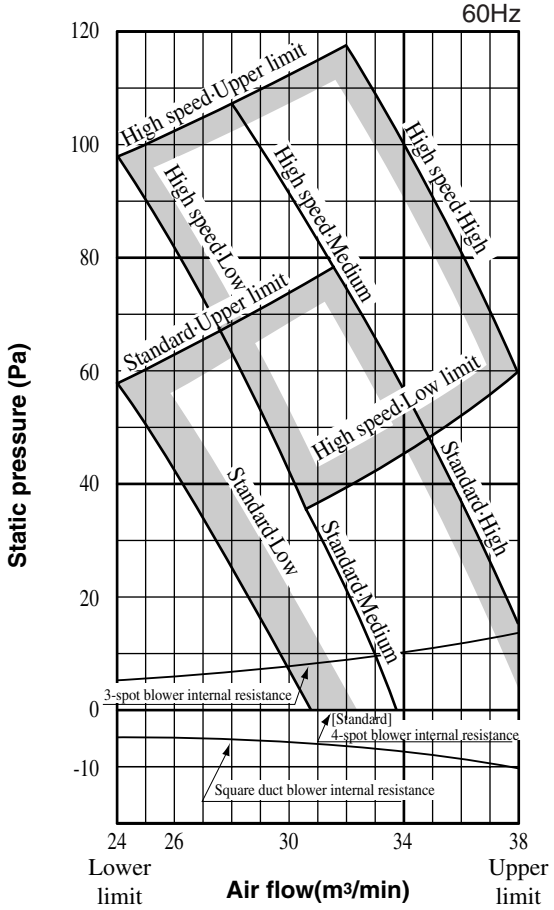

(3) Duct connected-High static pressure type (FDU)

Model FDU71KXE6

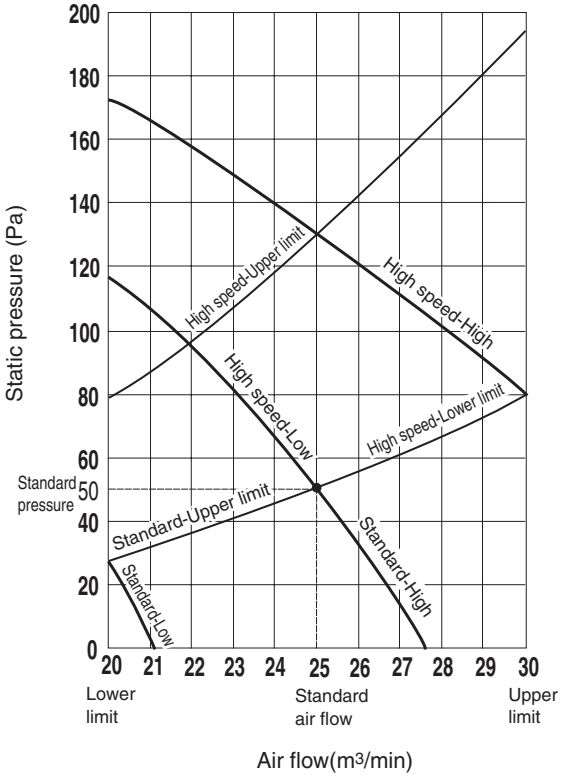

Model FDU90KXE6

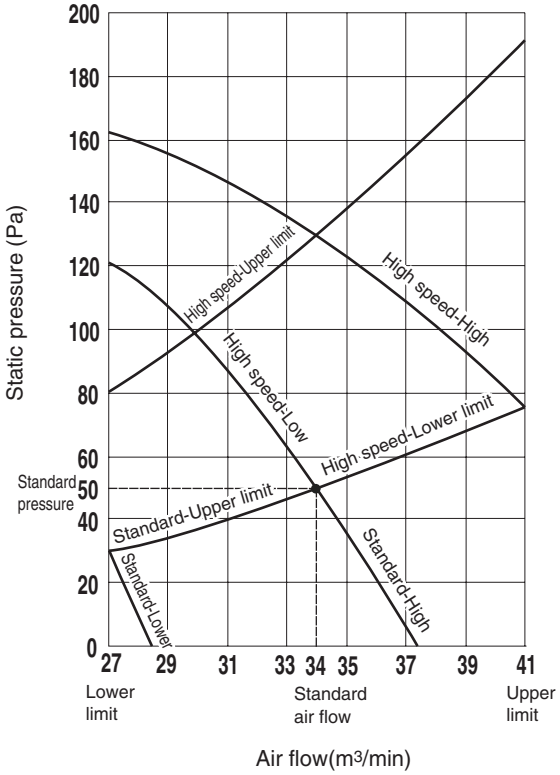

Model FDU112KXE6

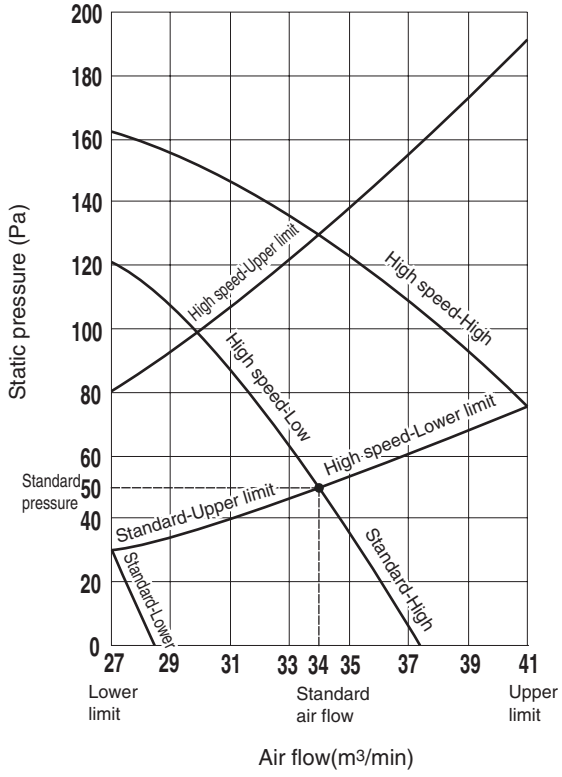

Model FDU140KXE6

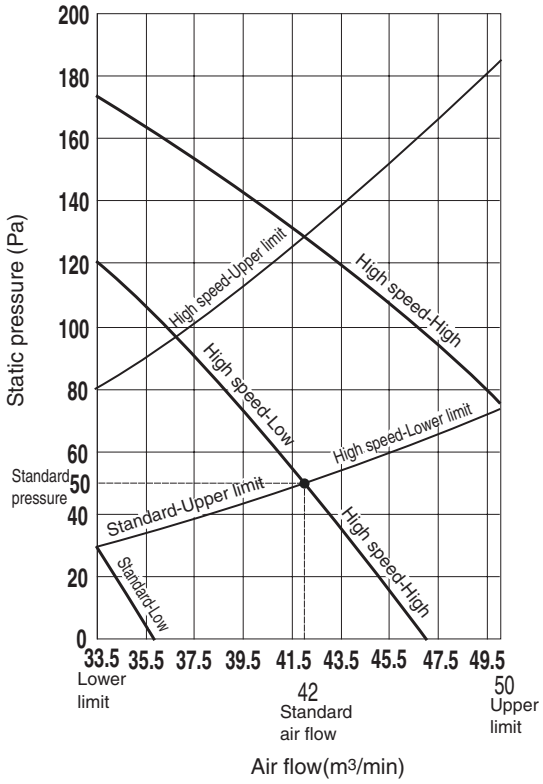

(4) Duct connected (Ultra thin)-Low static pressure type (FDQS)

Models FDQS22, 28, 36KXE6

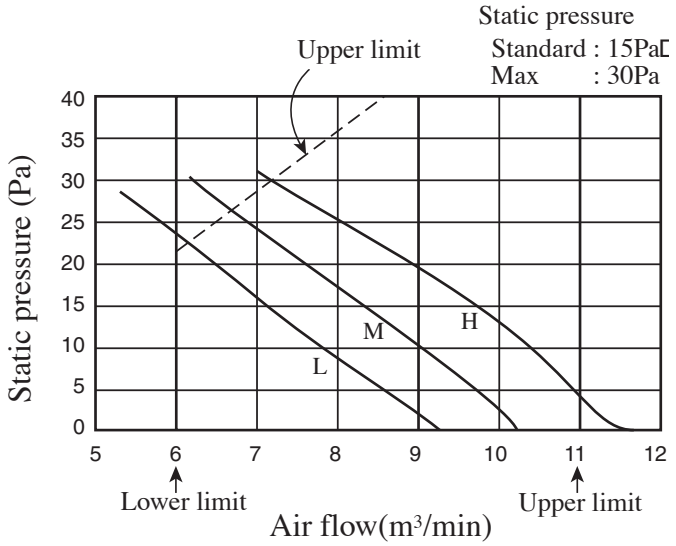

Models FDQS45, 56KXE6

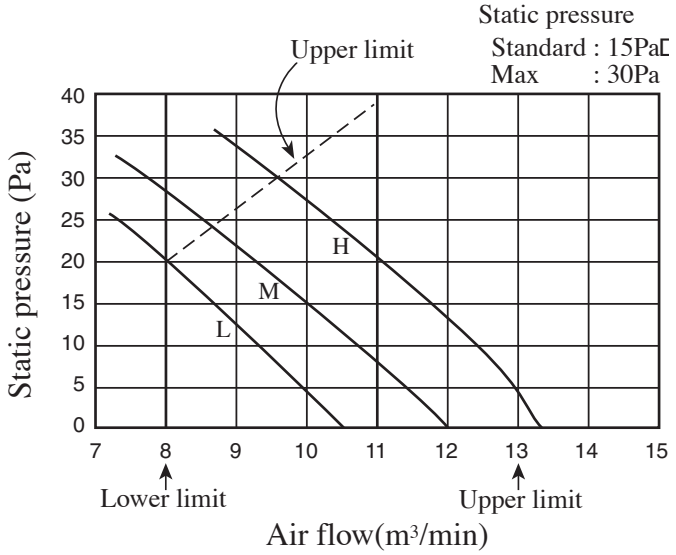

3.6 Noise level

Note (1) The data are based on the following conditions.
Ambient air tempetature: Indoor unit 27˚C DB, 19˚C WB. Outdoor unit 35˚C DB
(2) The data in the chart are measuted in an unechonic room.
(3) The noise levels measured in the field are usually higher than the data because of reflection.

(a) Ceiling cassette-4 way compact type (FDTC)

Measured based on JIS B 8616
Mike position as right

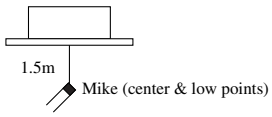

Models FDTC22KXE6, 28KXE6

Noise level 35 dB (A) at HIGH
33 dB (A) at MEDIUM
32 dB (A) at LOW

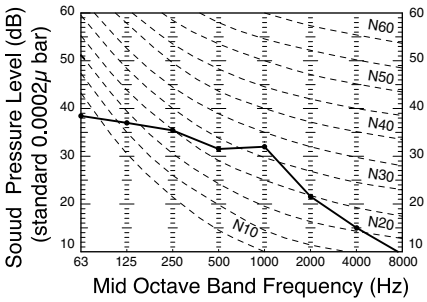

Model FDTC36KXE6

Noise level 38 dB (A) at HIGH
36 dB (A) at MEDIUM
34 dB (A) at LOW

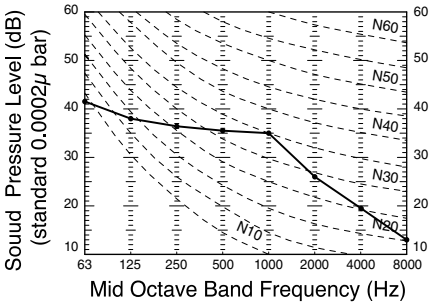

Model FDTC45KXE6

Noise level 40 dB (A) at HIGH
38 dB (A) at MEDIUM
36 dB (A) at LOW

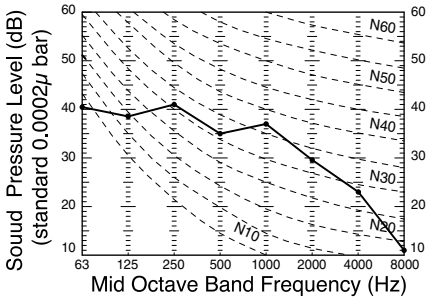

Model FDTC56KXE6

Noise level 45 dB (A) at HIGH
42 dB (A) at MEDIUM
39 dB (A) at LOW

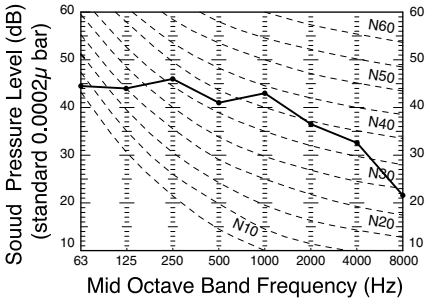

(b) Ceiling cassette-4 way type (FDT)

Measured based on JIS B 8616
Mike position as right

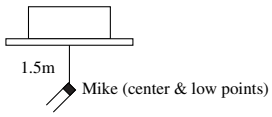

Models FDT28KXE6, 36KXE6, 45KXE6

Noise level 35 dB (A) at HIGH
33 dB (A) at MEDIUM
31 dB (A) at LOW

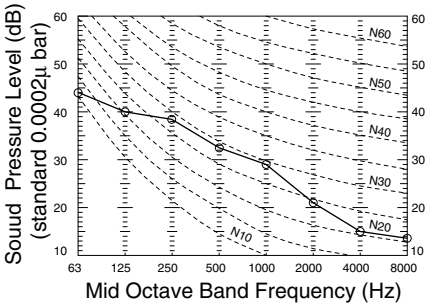

Model FDT56KXE6

Noise level 35 dB (A) at HIGH
33 dB (A) at MEDIUM
31 dB (A) at LOW

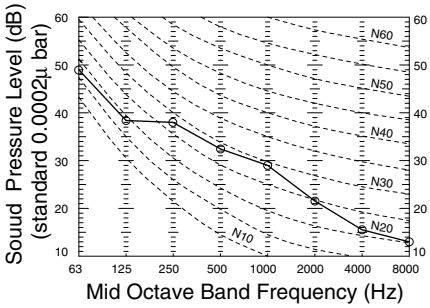

Model FDT71KXE6

Noise level 35 dB (A) at HIGH
33 dB (A) at MEDIUM
31 dB (A) at LOW

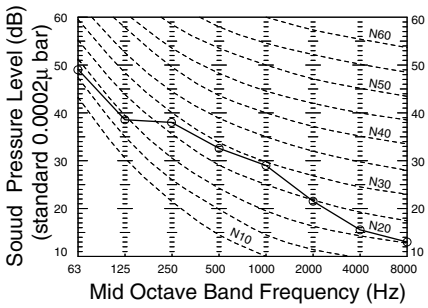

Model FDT90KXE6, 112KXE6

Noise level 42 dB (A) at HIGH
39 dB (A) at MEDIUM
36 dB (A) at LOW

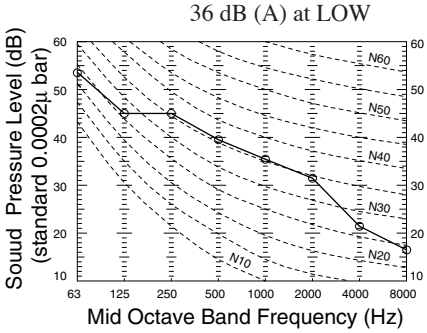

Model FDT140KXE6, 160KXE6

Noise level 45 dB (A) at HIGH
43 dB (A) at MEDIUM
40 dB (A) at LOW

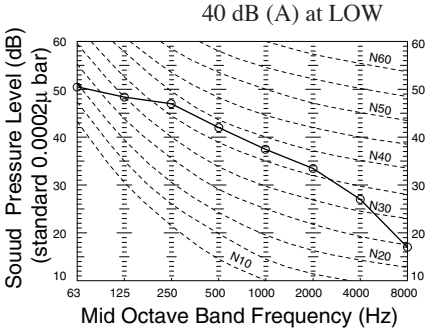

(c) Ceiling cassette-2 way type (FDTW)

Measured based on JIS B 8616

Mike position as below

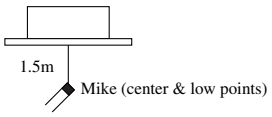

Models FDTW28KXE6, 45KXE6, 56KXE6

Noise level 39 dB (A) at HIGH
36 dB (A) at MEDIUM
32 dB (A) at LOW

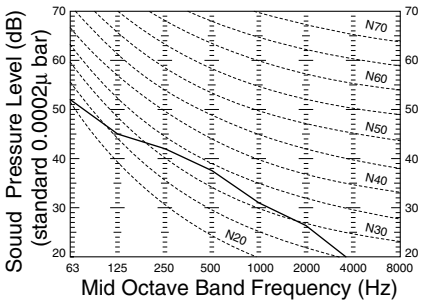

Model FDTW71KXE6

Noise level 41 dB (A) at HIGH
36 dB (A) at MEDIUM
35 dB (A) at LOW

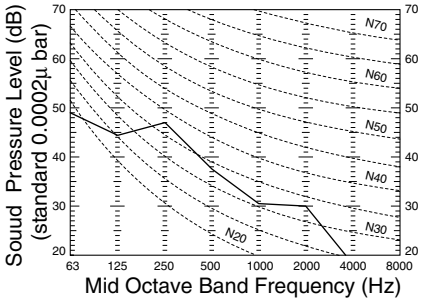

Model FDTW90KXE6

Noise level 41 dB (A) at HIGH
37 dB (A) at MEDIUM
36 dB (A) at LOW

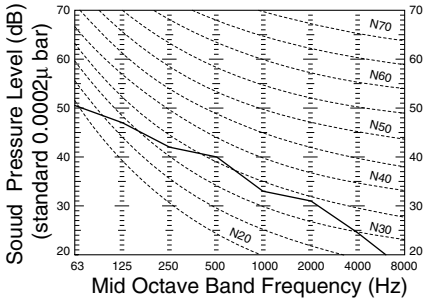

Model FDTW112KXE6

Noise level 44 dB (A) at HIGH
38 dB (A) at MEDIUM
37 dB (A) at LOW

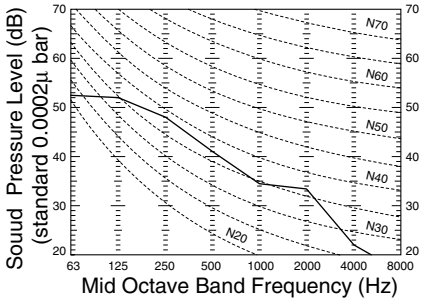

Model FDTW140KXE6

Noise level 45 dB (A) at HIGH
41 dB (A) at MEDIUM
39 dB (A) at LOW

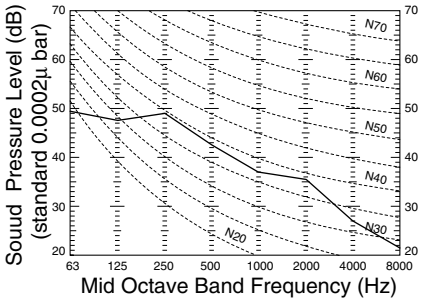

(d) Ceiling cassette-1 way compact type (FDTQ)

Measured based on JIS B 8616
Mike position as below

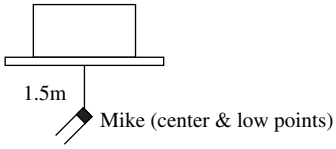

Models FDTQ2KXE6, 28KXE6 36KXE6

Noise level 38 dB (A) at HIGH
33 dB (A) at LOW

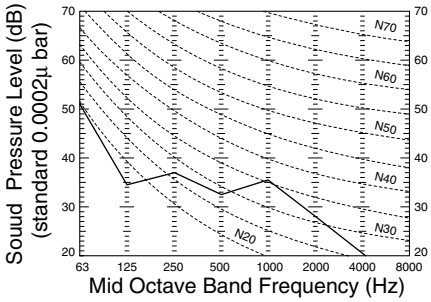

When used as the Duct panel type
Models FDTQ22KXE6, 28KXE6 36KXE6

Noise level 42 dB (A) at HIGH
39 dB (A) at LOW

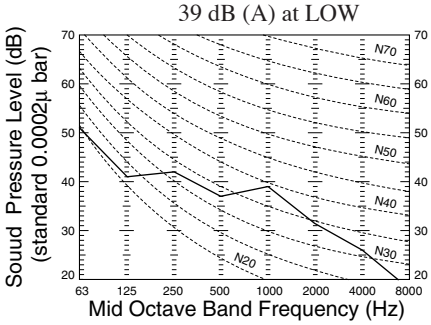

(e) 1-way outlet ceiling recessed type (FDTS)

Measured based on JIS B 8616
Mike position as below

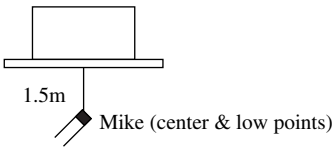

Model FDTS45KXE6

Noise level 43 dB (A) at HIGH
38 dB (A) at MEDIUM
36 dB (A) at LOW

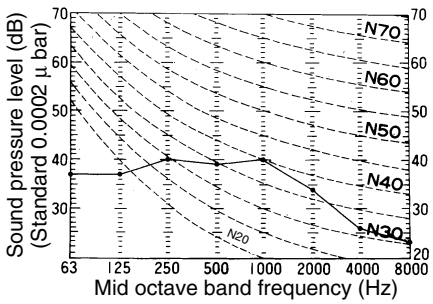

Model FDTS71KXE6

Noise level 44 dB (A) at HIGH
38 dB (A) at MEDIUM
36 dB (A) at LOW

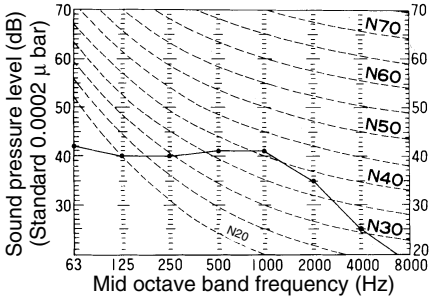

(f) Duct connected-High static pressure type (FDU)

Measured based on JIS B 8616
Mike position as right

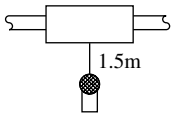

Model FDU71KXE6

Noise level 41 dB (A) at HIGH
37 dB (A) at LOW

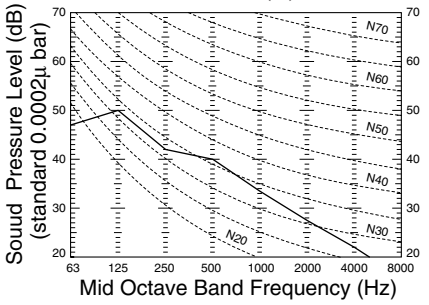

Model FDU90KXE6

Noise level 42 dB (A) at HIGH
37 dB (A) at LOW

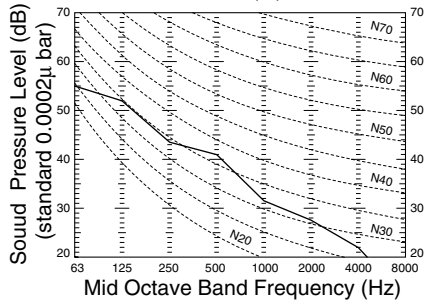

Model FDU112KXE6

Noise level 42 dB (A) at HIGH
38 dB (A) at LOW

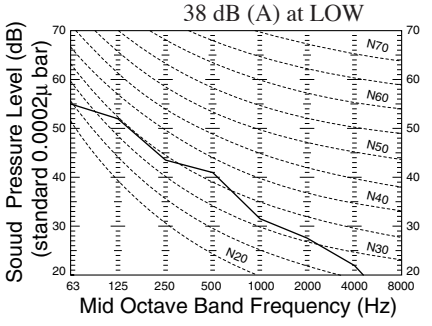

Model FDU140KXE6

Noise level 43 dB (A) at HIGH
49 dB (A) at LOW

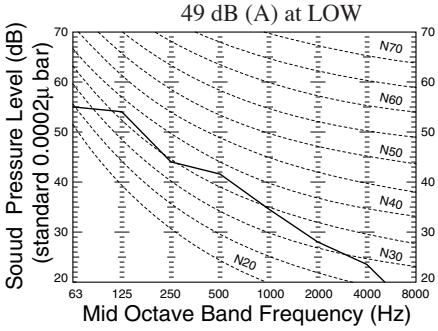

• **Power level**
(Measurement conditions: JIS-B8616,
measurement location: reverberation chamber)

(Unit: dB)

MODEL	Outlet side	Inlet side
FDU71KXE6	52	65
FDU90, 112KXE6	53	66
FDU140KXE6	54	67

Note (1) Values are for external static pressure of 50Pa

(g) Duct connected-Low/Middle static pressure type (FDUM)

Measured based on JIS B 8616
Mike position as right

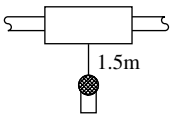

Model FDUM22KXE6

Noise level 33dB(A) at HIGH
31dB(A) at MEDIUM
28dB(A) at LOW

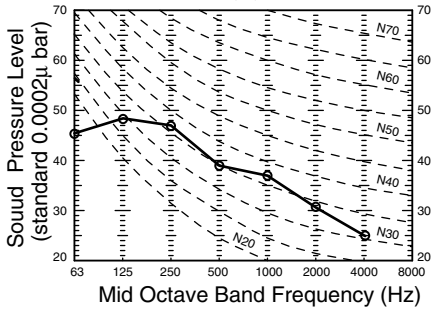

Models FDUM28KXE6,36KXE6

Noise level 34dB(A) at HIGH
31dB(A) at MEDIUM
28dB(A) at LOW

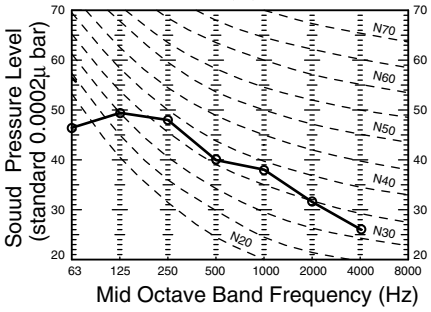

Models FDUM45KXE6,56KXE6

Noise level 35dB(A) at HIGH
32dB(A) at MEDIUM
29dB(A) at LOW

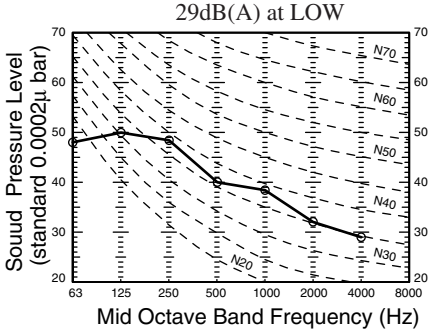

Model FDUM71KXE6

Noise level 35dB(A) at HIGH
32dB(A) at MEDIUM
29dB(A) at LOW

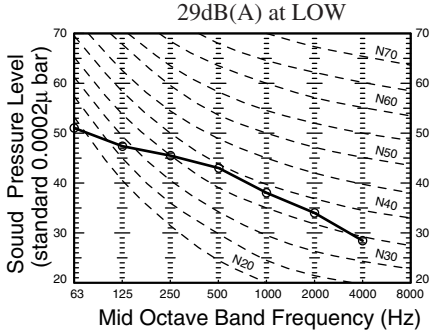

Model FDUM90KXE6

Noise level 36dB(A) at HIGH
33dB(A) at MEDIUM
30dB(A) at LOW

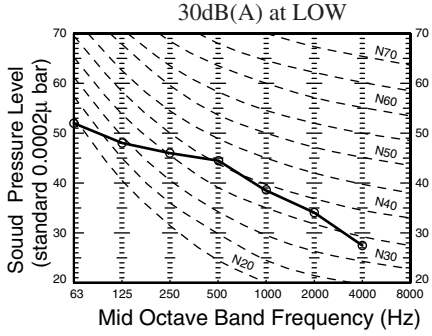

Model FDUM112KXE6

Noise level 37dB(A) at HIGH
35dB(A) at MEDIUM
32dB(A) at LOW

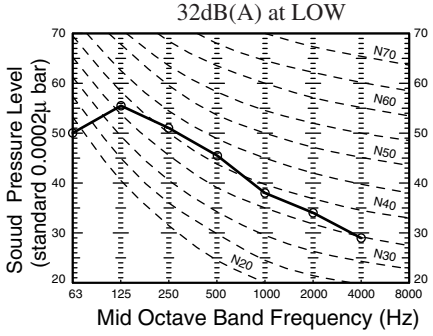

Model FDUM140KXE6

Noise level 38dB(A) at HIGH
36dB(A) at MEDIUM
33dB(A) at LOW

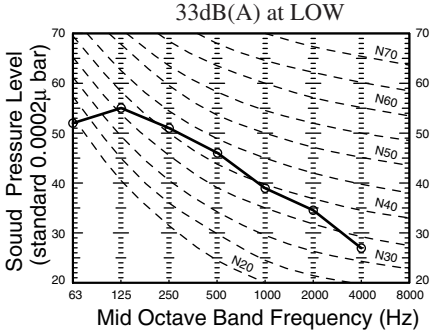

(h) Duct connected (Ultra thin)-Low static pressure type (FDQS)

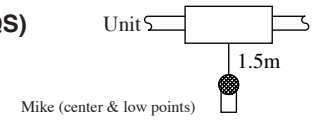

Measured based on JIS B 8616
Mike position as right

Model FDQS22, 28, 36KXE6
Noise level (Rear air return)
37 dB (A) at HIGH
35 dB (A) at MEDIUM
33 dB (A) at LOW

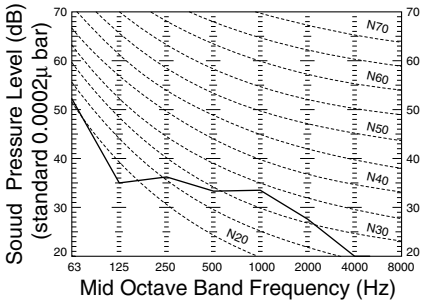

Model FDQS45, 56KXE6
Noise level (Rear air return)
37 dB (A) at HIGH
35 dB (A) at MEDIUM
33 dB (A) at LOW

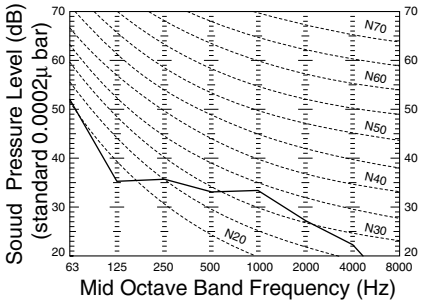

(i) Ceiling suspended type (FDE)

Models FDE36KXE6, 45KXE6, 56KXE6
Noise level 39 dB (A) at HIGH
38 dB (A) at MEDIUM
36 dB (A) at LOW

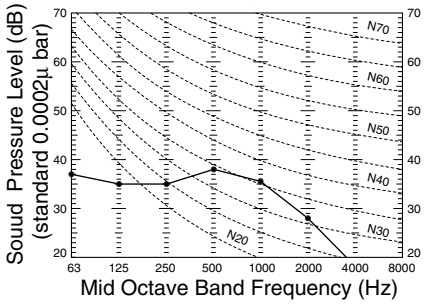

Measured based on JIS B 8616
Mike position as below

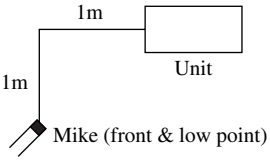

Model FDE71KXE6
Noise level 41 dB (A) at HIGH
39 dB (A) at MEDIUM
37 dB (A) at LOW

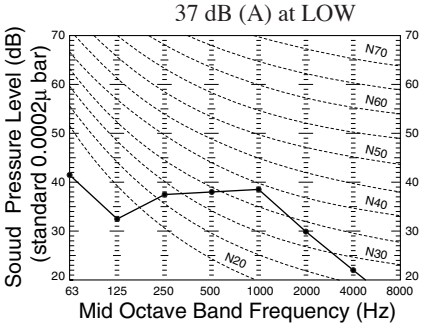

Model FDE112KXE6
Noise level 44 dB (A) at HIGH
41 dB (A) at MEDIUM
39 dB (A) at LOW

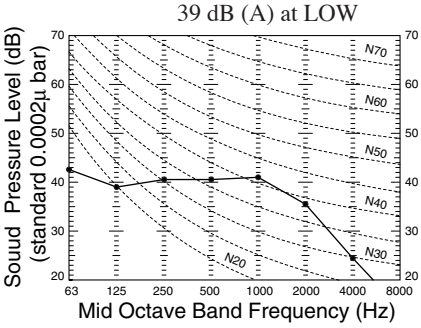

Model FDE140KXE6
Noise level 46 dB (A) at HIGH
44 dB (A) at MEDIUM
43 dB (A) at LOW

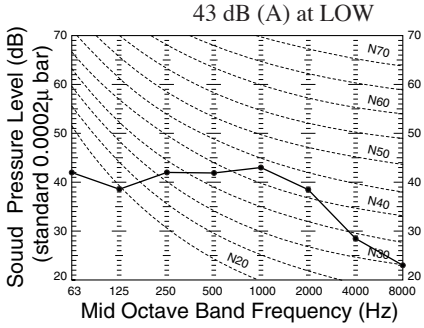

(j) Wall mounted type (FDK)

Measured based on JIS B 8616
Mike position as right

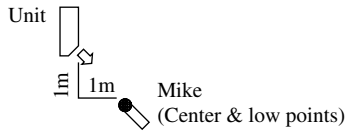

Models FDK22KXE6, 28KXE6

Noise level 40 dB (A) at HIGH
39 dB (A) at MEDIUM
37 dB (A) at LOW

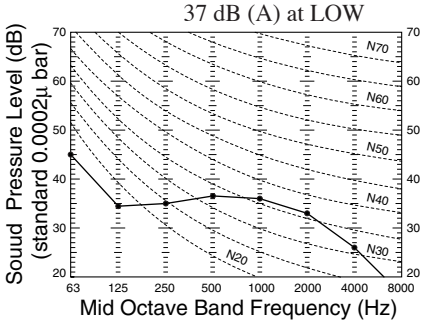

Model FDK36KXE6

Noise level 41 dB (A) at HIGH
39 dB (A) at MEDIUM
37 dB (A) at LOW

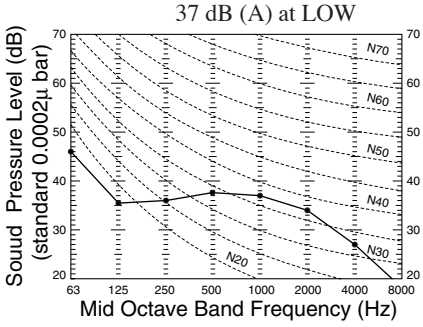

Model FDK45KXE6

Noise level 46 dB (A) at HIGH
39 dB (A) at MEDIUM
37 dB (A) at LOW

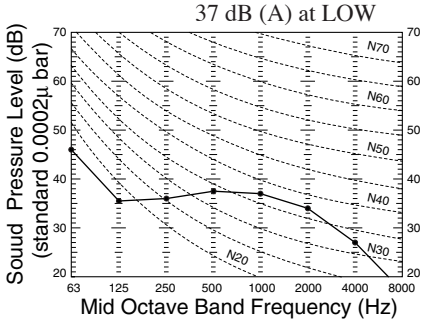

Model FDK56KXE6

Noise level 46 dB (A) at HIGH
39 dB (A) at MEDIUM
37 dB (A) at LOW

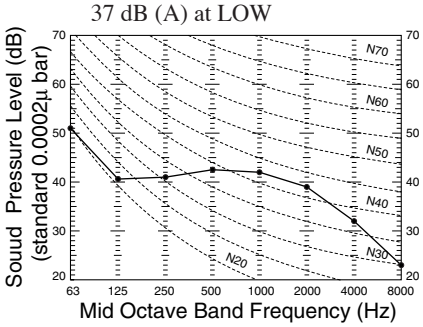

Model FDK71KXE6

Noise level 47 dB (A) at HIGH
43 dB (A) at MEDIUM
39 dB (A) at LOW

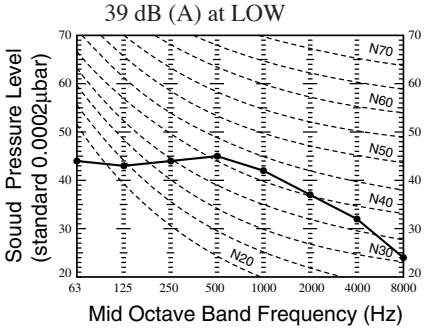

(k) Floor standing type (FDFL, FDFU))

Measured based on JIS B 8616
Mike position as right

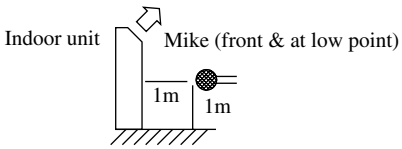

Models FDFL28KXE6, FDFU28KXE6

Noise level 41 dB (A) at HIGH
38 dB (A) at MEDIUM
36 dB (A) at LOW

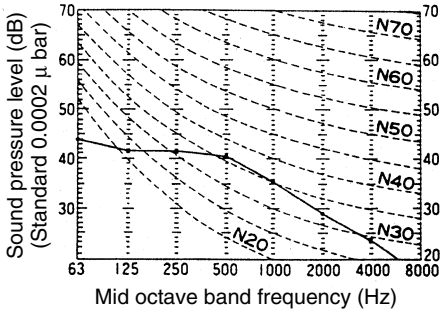

Models FDFL45KXE6, 71KXE6
FDFU45KXE6, 56KXE6, 71KXE6

Noise level 43 dB (A) at HIGH
41 dB (A) at MEDIUM
40 dB (A) at LOW

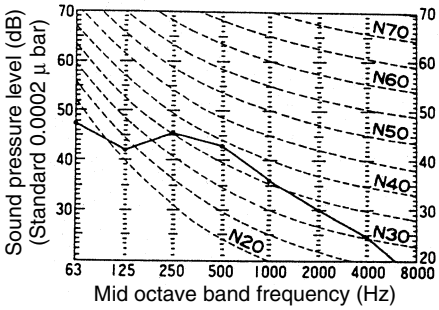

4 COMMON INFORMATION

4.1 Operation chart

Since the Multi KX series air conditioner units are free multitype to which the indoor units of different capacity and different model can be connected, the operation characteristics of all combinations are very complicated, therefore only the individual operation characteristics of indoor and outdoor units are shown.

(a) Operating characteristic of outdoor unit

(i) 1 phase

(220-240V 50Hz/220V 60Hz)

Item \ Models		FDC112KXEN6	FDC140KXEN6
Cooling power consumption	kW	2.80	4.17
Heating power consumption		2.89	4.31
Cooling running current	A	13.5/12.4	20.6/18.9
Heating running current		14.1/12.9	21.5/19.7
Inrush current (MAX.)	A	5	5
Cooling power factor	%	90-86/99	92-84/99
Heating power factor		93-85/99	91-84/99

Item \ Model		FDC155KXEN6
Cooling power consumption	kW	4.71
Heating power consumption		4.38
Cooling running current	A	23.3/21.3
Heating running current		21.9/20.1
Inrush current (MAX.)	A	5
Cooling power factor	%	92-84/99
Heating power factor		91-83/99

(ii) 3 phase

(380-415V 50Hz/380V 60Hz)

Item \ Model		FDC112KXES6	FDC140KXES6
Cooling power consumption	kW	2.80	4.17
Heating power consumption		2.89	4.31
Cooling running current	A	4.5/4.1	6.9/6.3
Heating running current		4.7/4.3	7.2/6.6
Inrush current (MAX.)	A	5	5
Cooling power factor	%	95-87/99	92-84/99
Heating power factor		93-86/99	91-83/99

Item \ Model		FDC155KXES6
Cooling power consumption	kW	4.71
Heating power consumption		4.38
Cooling running current	A	7.8/7.1
Heating running current		7.3/6.7
Inrush current (MAX.)	A	5
Cooling power factor	%	92-84/94
Heating power factor		91-83/99

Note (1) This packaged air-conditioner is manufactured and tested in conformity with the following standard. ISO-T1 “UNITARY AIR-CONDITIONERS”

(b) Operating characteristic of indoor unit

FDTC Series (220-240V 50Hz/220V 60Hz)

Models / Item	FDTC Series				
	22	28	36	45	56
Power consumption (kW)	0.03-0.03/0.03		0.03-0.03/0.03	0.04-0.04/0.04	0.04-0.04/0.04
Runnning curcuit (A)	0.10-0.09/0.10		0.11-0.10/0.11	0.14-0.13/0.14	0.15-0.14/0.15

FDT Series (220-240V 50Hz/220V 60Hz)

Models / Item	FDT Series					
	28	36	45	56	71	90
Power consumption (kW)	0.03-0.03/0.03			0.04-0.04/0.04	0.10-0.10/0.10	0.14-0.14/0.14
Runnning curcuit (A)	0.20-0.18/0.20			0.20-0.18/0.20	0.30-0.28/0.30	0.50-0.45/0.50

(220-240V 50Hz/220V 60Hz)

Models / Item	FDT Series	
	112	140, 160
Power consumption (kW)	0.14-0.14/0.14	
Runnning curcuit (A)	0.50-0.45/0.50	

FDTW Series (220-240V 50Hz/220V 60Hz) (220-240V 50Hz)

Models / Item	FDTW Series						
	28	45	56	71	90	112	140
Power consumption (kW)	0.09-0.10/0.09			0.10-0.11	0.12-0.13	0.18-0.20	0.20-0.24
Runnning curcuit (A)	0.43-0.44/0.43			0.48-0.50	0.57-0.59	0.86-0.89	0.90-0.98

FDTQ Series (220-240V 50Hz/220V 60Hz)

Models / Item	FDTQ Series		
	22	28	36
Power consumption (kW)	0.40-0.05/0.05		
Runnning curcuit (A)	0.20-0.22/0.23		

FDTS Series (220-240V 50Hz/220V 60Hz)

Models / Item	FDTS Series	
	45	71
Power consumption (kW)	0.09-0.11/0.09	0.12-0.15/0.12
Runnning curcuit (A)	0.43-0.46/0.43	0.58-0.63/0.58

FDUM Series (220-240V 50Hz/220V 60Hz)

Models / Item	FDUM Series						
	22	28, 36	45, 56	71	90	112	140
Power consumption (kW)	0.09-0.11/0.09	0.11-0.13/0.11	0.14-0.16/0.14	0.15-0.17/0.15	0.16-0.19/0.16	0.24-0.28/0.24	0.28-0.32/0.28
Runnning curcuit (A)	0.41-0.46/0.41	0.51-0.56/0.51	0.63-0.67/0.63	0.68-0.71/0.68	0.73-0.79/0.73	1.07-1.17/1.07	1.28-1.32/1.28

FDU Series (2220-240V 50Hz)

Models / Item	FDU Series			
	71	90	112	140
Power consumption (kW)	Cooling: 0.29-0.32 Heating: 0.27-0.30	Cooling: 0.35-0.39 Heating: 0.34-0.38	Cooling: 0.39-0.45 Heating: 0.34-0.39	
Runnning curcuit (A)	Cooling: 1.40-1.44 Heating: 1.33-1.37	Cooling: 1.65-1.79 Heating: 1.63-1.74	Cooling: 1.83-1.94 Heating: 1.65-1.76	

Notes (1) This packaged air-conditioner is manufactured and tested in conformity with the following standard.
ISO-T1 "UNITARY AIR-CONDITIONERS"
(2) The values shown in the above table are common to both cooling and heating operations.

FDQS Series

(220-240V 50Hz)

Models / Item	FDQS Series				
	22	28	36	45	56
Power consumption (kW)	0.06-0.07		0.07-0.08		0.08-0.09
Runnning curcuit (A)	0.35-0.38		0.36-0.39		0.37-0.40

FDK, FDFL, FDFU Series

(220-240V 50Hz/220V 60Hz) (220-240V 50Hz)

Models / Item	FDK Series						FDFL, FDFU Series		
	22	28	36	45	56	71	28	45, 56	71
Power consumption (kW)	Cooling: 0.05-0.05/0.05 Heating: 0.04-0.04/0.04					0.09-0.09/0.09	0.09-0.10	0.09-0.10	0.09-0.10
Runnning curcuit (A)	0.23-0.21/0.23					0.41-0.48/0.41	0.41-0.42	0.41-0.42	0.41-0.42

FDE Series

(220-240V 50Hz/220V 60Hz)

Models / Item	FDE Series				
	36	45	56	71	112
Power consumption (kW)	0.04-0.05/0.05			0.08-0.09/0.09	Cooling: 0.12-0.14/0.14 Heating: 0.11-0.13/0.13
Runnning curcuit (A)	0.19-0.21/0.23			Cooling: 0.37-0.38/0.41 Heating: 0.34-0.35/0.37	Cooling: 0.56-0.59/0.65 Heating: 0.52-0.54/0.59

Model / Item	FDE Series
	140
Power consumption (kW)	Cooling: 0.14-0.15/0.16 Heating: 0.13-0.14/0.15
Runnning curcuit (A)	Cooling: 0.64-0.65/0.73 Heating: 0.59-0.59/0.68

Notes (1) This packaged air-conditioner is manufactured and tested in conformity with the following standard.
ISO-T1 “UNITARY AIR-CONDITIONERS”
(2) The values shown in the above table are common to both cooling and heating operations.

(c) Calculation of total operation characteristics

Since the operation characteristics of series Multi-KX depend on combination of indoor unit, calculate the total operation characteristics of the system by using the formulas below according to specifications of each indoor unit or outdoor unit.

1) Total power consumption

Total power consumption (kW) = Power consumption of outdoor unit + ∑ (Power consumption of indoor unit)

2) Total running current

Total running current (A) = Running current of outdoor unit + [∑ (Running current of indoor unit) × 1/3]

3) Total power factor

Total power factor (%) = [Total power consumption (W) / $\sqrt{3}$* × Total running current (A) × Power source] × 100

Total operation characteristics = Operation characteristic value of outdoor unit + Operation characteristic value of indoor unit

Note (1)* 3phase only

[Example]

(Conditions) Operation Voltage ····· Indoor unit: 220 V, 50 Hz
Outdoor unit: 380 V, 50 Hz
Operation mode ····· Cooling and Heating
Unit····· Outdoor unit: FDC112KXES6 × 1 unit
Indoor unit: FDT71KXE6 × 1 units
FDT45KXE6 × 2 units

Operation characteristics of each unit (Cooling/Heating)

Item \ Models	FDC112KXES6	FDT71KXE6	FDT45KXE6
Power consumption (kW)	2.80/2.89	0.10/0.10	0.03/0.03
Running current (A)	4.5/4.7	0.30/0.30	0.20/0.20

① Total power consumption (kW)

(Cooling) 2.80 + (0.10 × 1 + 0.03 × 2) ≒ 2.96 (kW)

(Heating) 2.89 + (0.10 × 1 + 0.03 × 2) = 3.05 (kW)

② Total running current (A)

(Cooling) $4.5 + (0.3 \times 0.10 + 0.2 \times 2) \times \frac{1}{3} \fallingdotseq 4.7$ (A)

(Heating) $4.7 + (0.3 \times 1 + 0.2 \times 2) \times \frac{1}{3} \fallingdotseq 4.9$ (A)

③ Total power factor (%)

(Cooling) $\frac{2.96 \times 1000}{\sqrt{3} \times 4.7 \times 380} \times 100 \fallingdotseq 96$ %

(Heating) $\frac{3.05 \times 1000}{\sqrt{3} \times 4.9 \times 380} \times 100 \fallingdotseq 95$ %

4.2 Range of usage & limitations

Item \ System		FDC112KXEN6 112KXES6	FDC140KXEN6 140KXES6	FDC155KXEN6 155KXES6
Indoor intake air temperature (Upper, lower limits)		Please see the next page.		
Outdoor air temperature (Upper, lower limits)				
Indoor units that can be used in combination	Number of connected units	1 to 6 units	1 to 8 units	1 to 8 units
	Total capacity	90 ~ 168	112 ~ 210	124 ~ 233
Total Piping Length (Total of the lengths of all piping)		MAX. 100m		
Maximum Piping Distance (From outdoor unit to farthest indoor unit)		Indoor unit MAX. 70m		
Total length of ø9.52 liquid pipe		Within 50 m		
Difference in height between indoor and outdoor units	Outdoor unit is higher	MAX. 30m		
	Outdoor unit is lower	MAX. 15m		
Difference in height between indoor units		MAX. 4m		
Indoor unit atmosphere (behind ceiling) temperature and humidity		Dew point temperature 28 ℃ or less, relative humidity 80% or less		
Compressor stop/start frequency	1 cycle time	7 min or more (4 minutes or more from start to stop or 3 minutes or more from stop to start)		
	Stop time	3 min or more		
Power source voltage	Voltage fluctuation	Within ±10% of rated voltage		
	Voltage drop during start	Within ±15% of rated voltage		
	Phase unbalance	Within ±3% of rated voltage		

Allowable length of refrigerant piping, height difference between indoor and outdoor unit

(1) Branch pipe method (using branch piping)

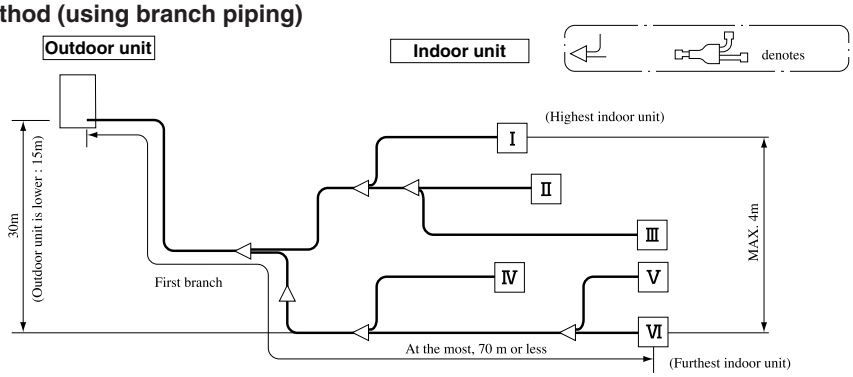

(2) Header System (Header used)

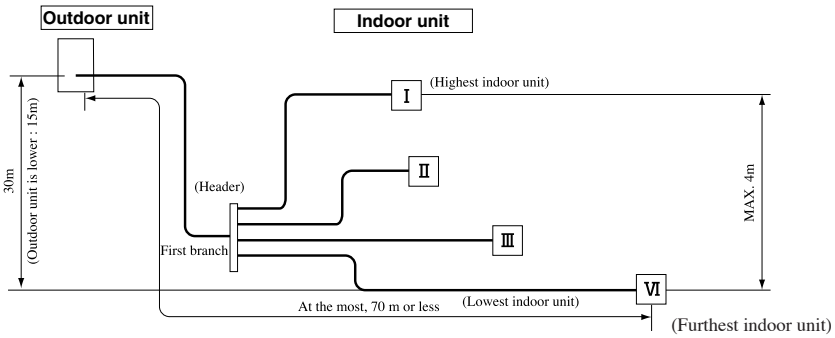

Note (1) There is no limit to the permissible piping lengths for the main pipes or other piping, but keep furthest indoor unit piping to 50 m with a diameter of ø9.52.
(2) A branch piping system cannot be connected after a header system.

Rage of usage & limitations

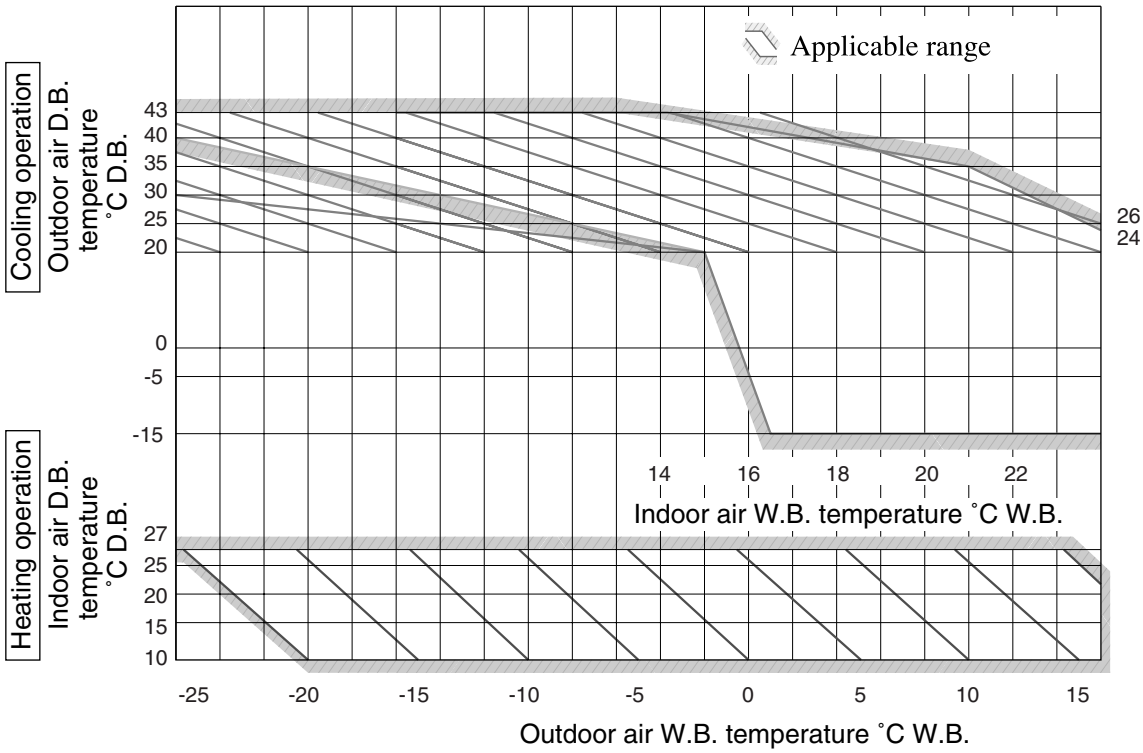

"CAUTION" Cooling operation under low ambient air temperature conditions

KXE6 models can be operated in cooling mode at low ambient air temperature condition within above temperature range. However in case of severely low temperature conditions if the following precaution is not observed, it may not be operated in spite of operable temperature range mentioned above and cooling capacity may not be established under certain conditions.

[Precaution]
In case of severely low temperature condition

1) Install the outdoor unit at the place where strong wind cannot blow directly into the outdoor unit.
2) If there is no installation place where can prevent strong wind from directly blowing into the outdoor unit, mount the flex flow adaptor (prepared as optional part) or like such devices onto the outdoor unit in order to divert the strong wind.

[Reason]
Under the low ambient air temperature conditions of -5˚C or lower, if strong wind directly blow into the outdoor unit, the outdoor heat exchanger temperature will drop, even though the outdoor fan is stopped by outdoor fan control. This makes high and low pressures to drop as well. This low pressure drop makes the indoor heat exchanger temperature to drop and will activate anti-frost control at indoor heat exchanger at frequent intervals, that cooling operation may not be established for any given time.

4.3 Piping system

Models All model

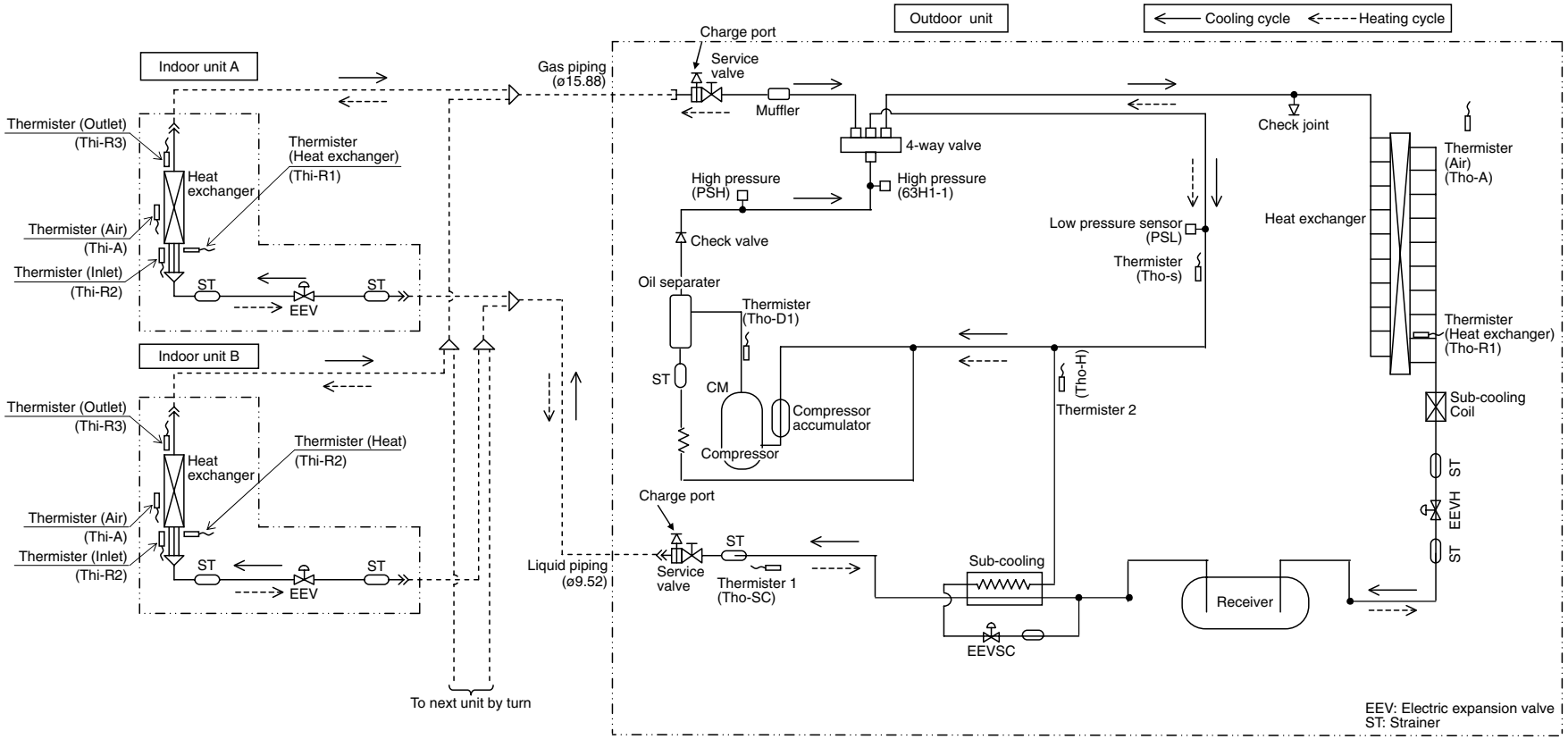

Notes (1) Pressure switch setting value

Name	Setting value
High pressure switch ($63H_{1-1}$) [For protection]	4.15 open/3.15 close (MPa)

(2) Function of thermistor

Low pressure sensor (PSL) : Compressor control
Protection
0.18 ON/0.236 OFF (MPa)
Error:
0.134 ON/0.18 OFF (MPa)

High pressure sensor (PSH) : Compressor control
Protection
Cooling: 3.70 ON (MPa)
Heating: 3.00 ON (MPa)

Thi-R1,2:Heating operation:Indoor fan control
Cooling operation:Frost prevention control
Super heat control

Thi-R3:Super heat control

Tho-R1 : For control of defrosting.
Tho-A : For heating and cooling to low outdoor temp., for control of defrosting.
Tho-D1 : For control of discharge pipe temperature.
Tho-S : For control of suction pipe temperature.
Sub-cooling coil thermistor 1 (Tho-SC) :
Sub-cooling coil control during cooling
Sub-cooling coil thermistor 2 (Tho-H) :
Sub-cooling coil control during cooling

4.4 Selection chart

(1) Equipment selection flow

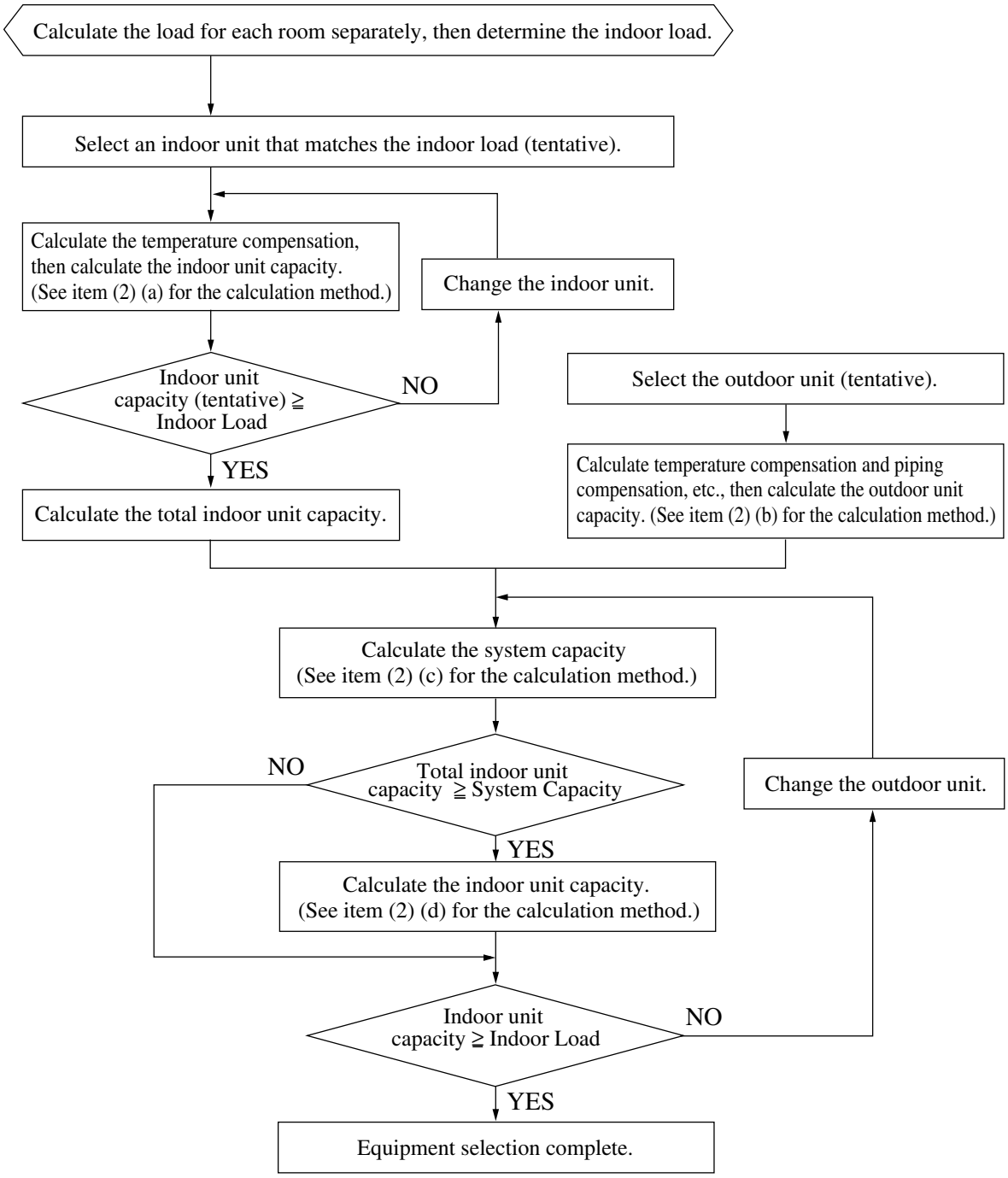

(2) Capacity calculation method

(a) Calculating the indoor unit capacity compensation

Indoor unit capacity (cooling, heating) = Indoor unit total rated capacity
× Capacity compensation coefficient according to temperature conditions

See item (3) (a) concerning the capacity compensation coefficient according to temperature conditions.

(b) Calculating the outdoor unit capacity compensation

Outdoor Unit Capacity (Cooling, Heating) = Outdoor unit rated capacity (rated capacity when 100% connected)
× Capacity compensation coefficient according to temperature conditions
× Capacity compensation coefficient according to piping length
× Capacity compensation coefficient according to height difference
× Correction of heating capacity in relation to the frost on the outdoor unit heat exchanger
× Capacity compensation coefficient according to indoor unit connection capacity

① See item (3) (a) concerning the capacity compensation coefficient according to temperature conditions.
② See item (3) (c) concerning the capacity compensation coefficient according to piping length.
③ See item (3) (d) concerning the capacity compensation coefficient according to height difference. This compensation should be carried out only in cases where the outdoor unit is lower during cooling and higher during heating.
④ See item (3) (e) correction of heating capacity in relation to the frost on the outdoor unit heat exchanger. This compensation should be carried out only when calculating the heating capacity.
⑤ See item (3) (f) concerning the capacity compensation coefficient according to indoor unit connected capacity. This compensation should be carried out only in cases where the indoor unit total capacity is 100% or higher.

(c) Calculating system capacity

Compare the capacities determined in items (a) and (b) above and let the smaller value be the system capacity (cooling, heating).

① In cases where indoor unit total capacity (cooling, heating) > outdoor unit capacity (cooling, heating)
System capacity (cooling, heating) = Outdoor unit capacity (cooling, heating)
② In cases where indoor unit total capacity (cooling, heating) < outdoor unit capacity (cooling, heating)
System capacity (cooling, heating) = Indoor unit capacity (cooling, heating)

(d) Calculating indoor unit capacity [item (c) ①only]

Indoor unit capacity (cooling, heating) = System capacity (cooling, heating)
× [(Indoor unit capacity) / (Indoor unit total capacity)]

Capacity calculation examples

Example 1

Cooling (when the indoor unit connected total capacity is less than 100%)

- Outdoor unit FDC140KXES6 ..... 1 Unit
- Indoor unit FDT56KXE6 ..... 2 Units
- Piping length ..... 60 m (Equivalent length)
- Indoor, outdoor unit height difference ..... 15 m (Outdoor unit is lower)
- Temperature conditions ..... Outdoor temperature: 33°C DB
- Temperature conditions ..... Indoor temperature: 19°C WB

<Indoor unit total cooling capacity>: Item (2) (a) calculation.

- Indoor unit rated cooling capacity: 5.6 kW
- Capacity compensation coefficient according to temperature conditions:
  1.02 (Calculated according to Indoor 19˚C WB / Outdoor 33˚C DB); (See page 108)
  Indoor unit cooling capacity: 5.6 kW × 1.02 ≒ 5.7 kW
- Indoor unit total cooling capacity calculation;
  indoor unit total cooling capacity: 5.7 kW × 2 units = <u>11.4 kW</u>

<Outdoor unit maximum cooling capacity> : Item (2) (b) calculation

- Outdoor unit rated cooling capacity: 14.0 kW
- Capacity compensation coefficient according to temperature conditions:
  1.02 (Calculated according to Indoor 19˚C WB / Outdoor 33˚C DB); (See page 108)
  Outdoor unit cooling capacity: 14.0 kW × 1.02 ≒ 14.3 kW
- Capacity compensation coefficient according to piping length: 0.87 (calculated according to 60 m length); (See page 110)
  14.3 kW × 0.87 = 12.4 kW

• Capacity compensation coefficient according to height difference: 0.97 (calculated according to 15 m difference); (See page 111)
12.4 kW × 0.97 ≒ 12.0 kW
• Capacity compensation coefficient according to indoor unit connected total capacity: 1.0 ← (56 × 2) / 140 < 100%)
No compensation

<System cooling capacity>: Item (2) (c) calculation

Compare the indoor unit total cooling capacity and the outdoor unit maximum cooling capacity. The smaller value is the actual system cooling capacity.

• Indoor unit total cooling capacity: 11.4 kW ⇨ System cooling capacity: 11.4 kW
• Outdoor unit maximum cooling capacity: 12.0 kW

<Indoor unit capacity compensation> No compensation (5.7 kW)

Example 2

Cooling (when the indoor unit connected total capacity is 100% or higher)

• Outdoor unit FDC140KXES6 ..... 1 Unit
• Indoor unit FDT56KXE6 ..... 3 Units
• Piping length ..... 60 m (Equivalent length)
• Indoor, outdoor unit height difference ..... 15 m (Outdoor unit is higher)
• Temperature conditions ..... Outdoor temperature: 35°C DB
• Temperature conditions ..... Indoor temperature: 18°C WB

<Indoor unit total cooling capacity>: Item (2) (a) calculation.

• Indoor unit rated cooling capacity: 5.6 kW
• Capacity compensation coefficient according to temperature conditions:
0.95 (Calculated according to Indoor 18˚C WB / Outdoor 35˚C DB); (See page 108)
Indoor unit cooling capacity: 5.6 kW × 0.95 ≒ 5.3 kW
• Indoor unit total cooling capacity calculation;
indoor unit total cooling capacity: 5.3 kW × 3 units ≒ 15.9 kW

<Outdoor unit maximum cooling capacity> : Item (2) (b) calculation

• Outdoor unit rated cooling capacity: 14.0 kW
• Capacity compensation coefficient according to temperature conditions:
0.95 (Calculated according to Indoor 18˚C WB / Outdoor 35˚C DB); (See page 108)
Outdoor unit cooling capacity: 14.0 kW × 0.95 ≒ 13.3 kW
• Capacity compensation coefficient according to piping length: 0.87 (calculated according to 60 m length); (See page 110)
13.3 kW × 0.87 ≒ 11.6 kW
• Capacity compensation coefficient according to height difference: 1.0 (the outdoor unit is higher during cooling)
No compensation
• Capacity compensation coefficient according to indoor unit connected total capacity: 1.02 ← (56 × 3) / 140 = 120%) (See page 112)
11.6 kW × 1.02 ≒ 11.8 kW

<System cooling capacity>: Item (2) (c) calculation

Compare the indoor unit total cooling capacity and the outdoor unit maximum cooling capacity. The smaller value is the actual system cooling capacity.

• Indoor unit total cooling capacity : 15.9 kW ⇨ System cooling capacity: 11.8 kW
• Outdoor unit maximum cooling capacity : 11.8 kW

<Indoor unit cooling capacity Compensation>: Item (2) (d) calculation.

$$\frac{11.8\ \text{kW} \times 5.3\ \text{kW}}{15.9\ \text{kW}} \fallingdotseq 3.9\ \text{kW}$$

Example 3

Heating (when the indoor unit connected total capacity is 100% or higher)

• Outdoor unit FDC140KXES6 ..... 1 Unit
• Indoor unit FDT56KXE6 ..... 3 Units
• Piping length ..... 60 m (Equivalent length)
• Indoor, outdoor unit height difference ..... 20 m (Outdoor unit is higher)
• Temperature conditions ..... Outdoor temperature: 6˚C WB
• Temperature conditions ..... Indoor temperature: 19˚C DB

<Indoor unit total heating capacity>: Item (2) (a) calculation.

• Indoor unit rated heating capacity:6.3 kW
• Capacity compensation coefficient according to temprature conditions:
1.04 (Calculated according to Outdoor 6˚C WB / Indoor 19˚C DB); (See page 109)
Indoor unit heating capacity: 6.3 kW × 1.04 ≒ 6.6 kW
• Indoor unit total heating capacity calculation;
indoor unit total heating capacity: 6.6 kW × 3 units ≒ 19.8 kW

<Outdoor unit maximum heating capacity> : Item (2) (b) calculation

- Outdoor unit rated heating capacity: 16.0 kW
- Capacity compensation coefficient according to temperature conditions:
  1.04 (Calculated according to Outdoor 6˚C WB / Indoor 19˚C DB); (See page 109)
  Outdoor unit heating capacity: 16.0 kW × 1.04 = 16.6 kW
- Capacity compensation coefficient according to piping length: 0.98 (calculated according to 60 m length); (See page 110)
  16.0 kW × 0.98 ≒ 15.7 kW
- Capacity compensation coefficient according to height difference: 0.96 (calculated according to 20 m difference); (See page 110)
  15.7 kW × 0.96 ≒ 15.1 kW
- Correction of heating capacity in relation to the frost on the outdoor unit heat exchanger: 1.0;
  15.1 kW × 1.0 ≒ 15.1 kW.
- Capacity compensation coefficient according to indoor unit connected total capacity: 1.02← (56 × 3) / 140 = 120%) (See page 112)
  15.1 kW × 1.02 ≒ 15.4 kW.

<System heating capacity>: Item (2) (c) calculation

Compare the indoor unit total heating capacity and the outdoor unit maximum heating capacity. The smaller value is the actual system heating capacity.

- Indoor unit total heating capacity : 19.8 kW ⇨ System heating capacity: 15.4 kW
- Outdoor unit maximum heating capacity : 15.4 kW

<Indoor unit heating capacity compensation> (Item (2) (d) calculation

$$\frac{15.4\ \text{kW} \times 6.6\ \text{kW}}{19.8\ \text{kW}} \fallingdotseq 5.1\ \text{kW}$$

(3) Capacity compensation coefficient

(a) Capacity compensation coefficient and power consumption compensation coefficient according to indoor and outdoor temperature conditions.

1) Capacity compensation coefficient

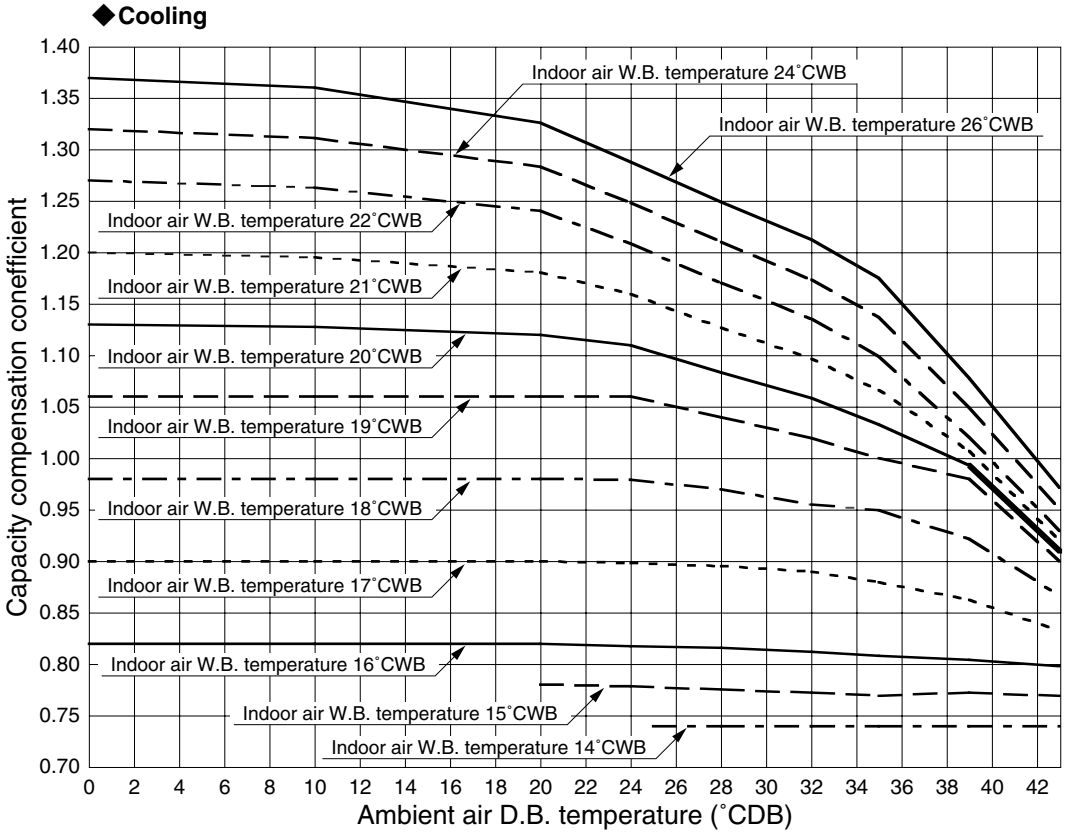

◆**Heating**

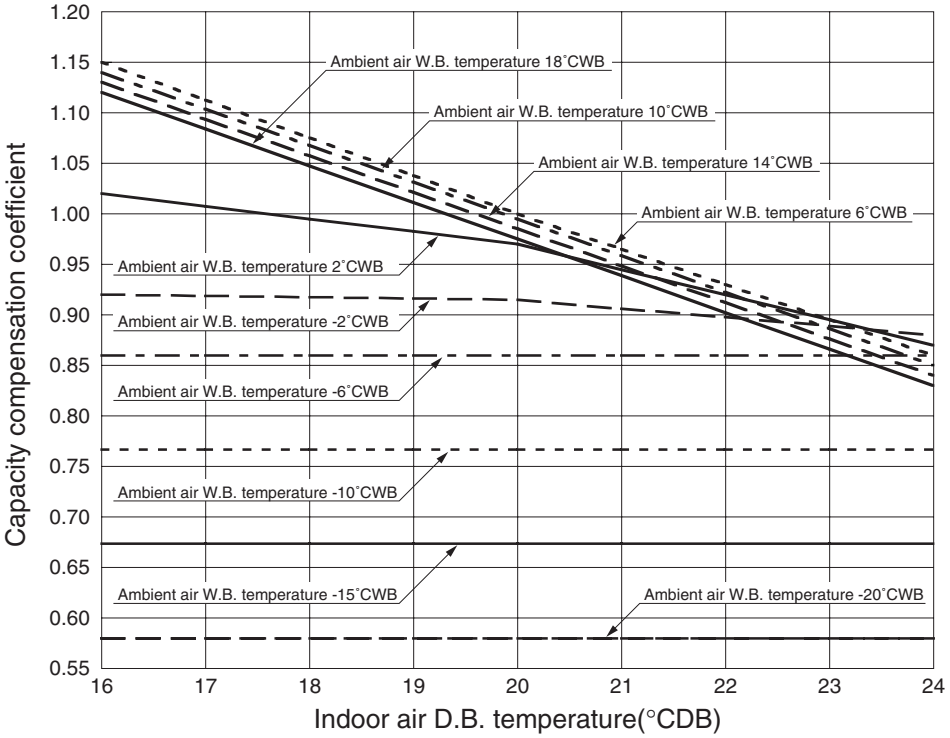

2) Power consumption correction factor

◆**Cooling**

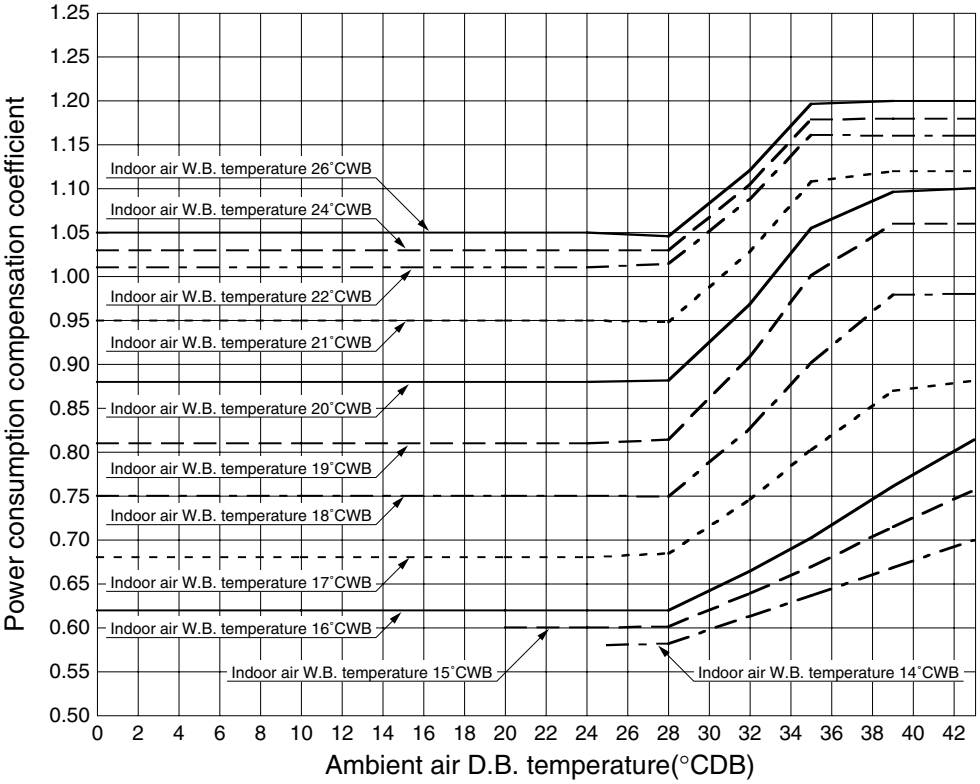

◆**Heating**

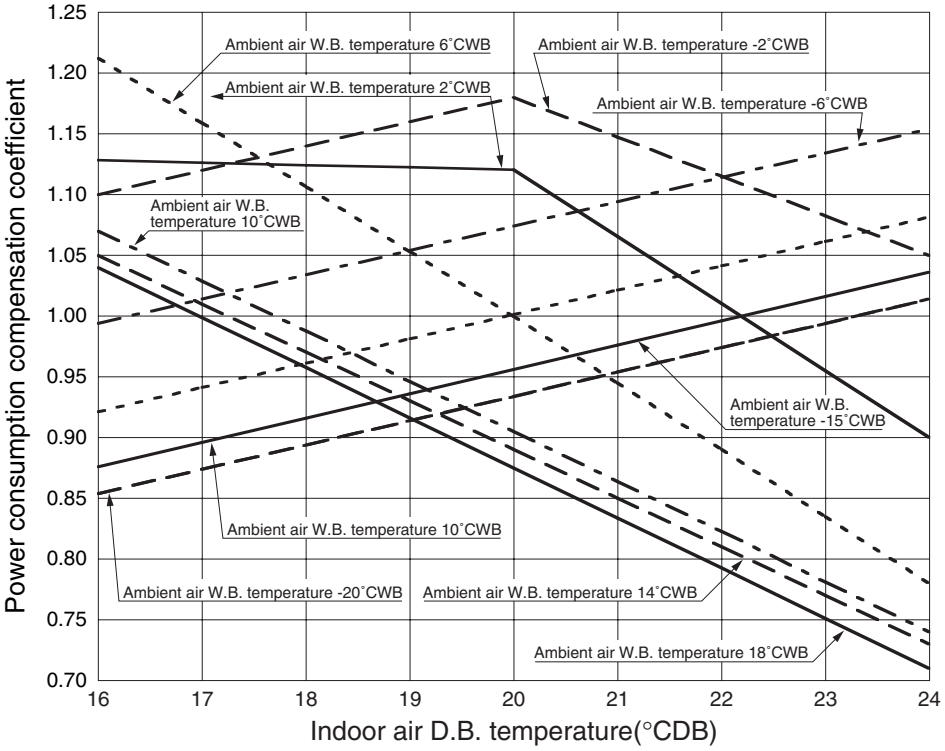

(c) Correction of cooling and heating capacity in relation to one way length of refrigerant piping.

1) Cooling

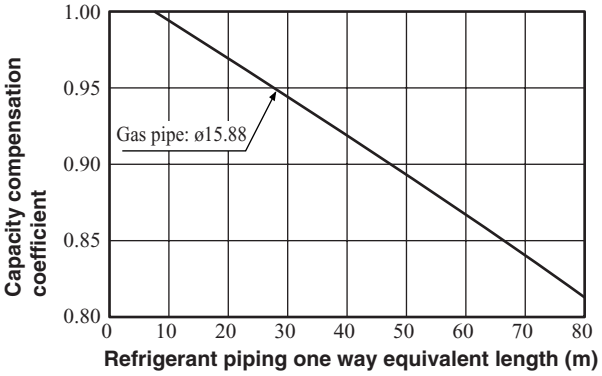

2) Heating

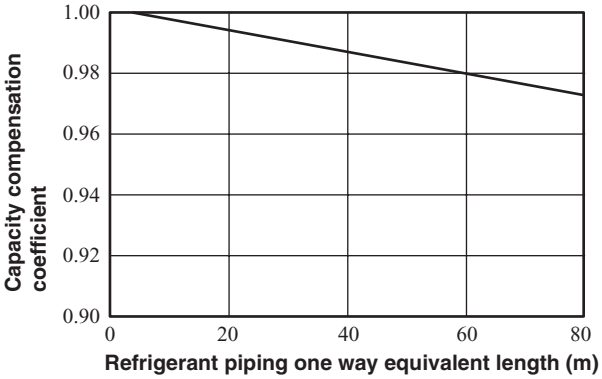

Note (1) Equivalent piping length can be obtained by calculating as follows.

Equivalent piping length = Real gas piping length + Number of bends in gas piping × Equivalent piping length of bends.

Equivalent length of each joint — Unit : m/one part

Gas piping size	ϕ9.52	ϕ12.7	ϕ15.88	ϕ19.05	ϕ25.4	ϕ28.58	ϕ31.8
Joint (90˚elbow)	0.15	0.20	0.25	0.30	0.40	0.45	0.55

(d) When the outdoor unit is located at a lower height than the indoor unit in cooling operation and when the outdoor unit is located at a higher height than the indoor unit in heating operation, the following values should be subtracted from the values in the above table.

Height difference between the indoor unit and outdoor unit in the vertical height difference	5 m	10 m	15 m	20 m	25 m	30 m
Adjustment coefficient	0.99	0.98	0.97	0.96	0.95	0.94

Height difference between the indoor unit and outdoor unit in the vertical height difference	35 m	40 m	45 m	50 m
Adjustment coefficient	0.93	0.92	0.91	0.90

(e) Correction of heating capacity in relation to the frost on the outdoor unit heat exchanger

Air inlet temperature of outdoor unit in ˚C WB	-20	-15	-13	-11	-9	-7	-5	-3	-1	1	3	5 or more
Adjustment coefficient	0.96	0.96	0.96	0.95	0.94	0.93	0.91	0.88	0.86	0.87	0.92	1

The correction factors will change drastically according to weather conditions. So necessary adjustment should be made empirically according to the weather data of the particular area.

(f) The capacity compensation coefficient and power consumption compensation coefficient vary according to the total capacity of concurrently operating indoor units, as shown below.

◆ **Capacity compensation coefficient**

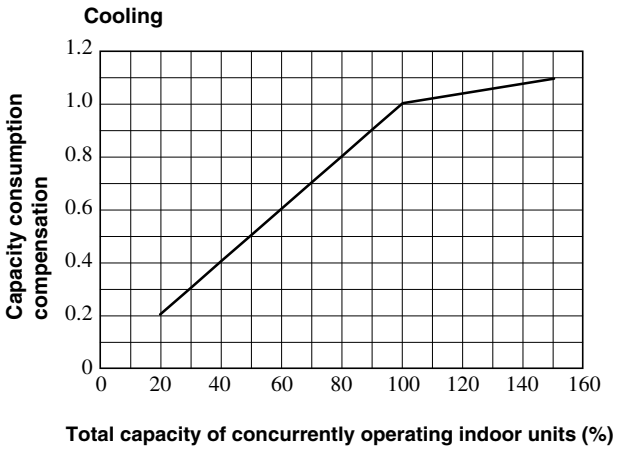

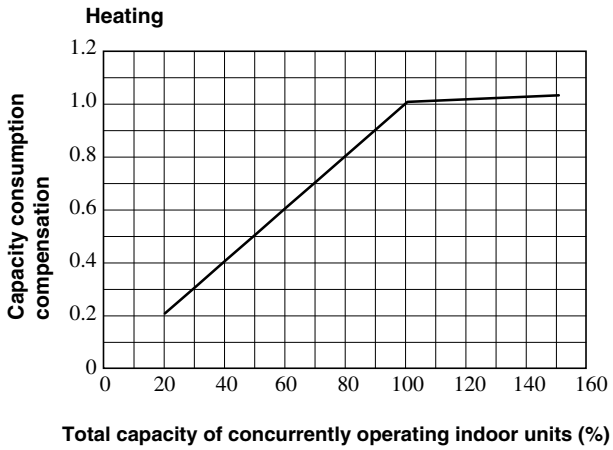

◆ **Power consumption compensation coeffcient**

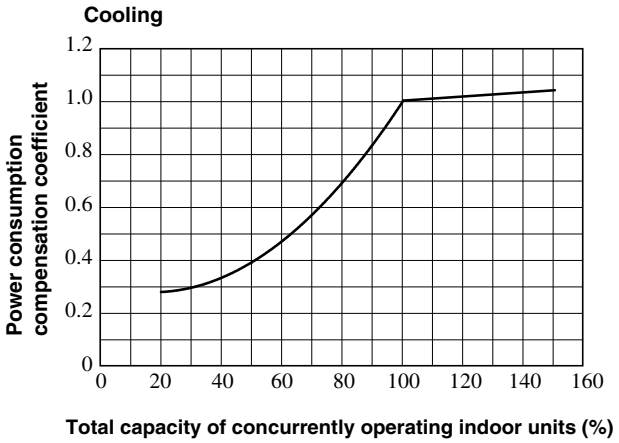

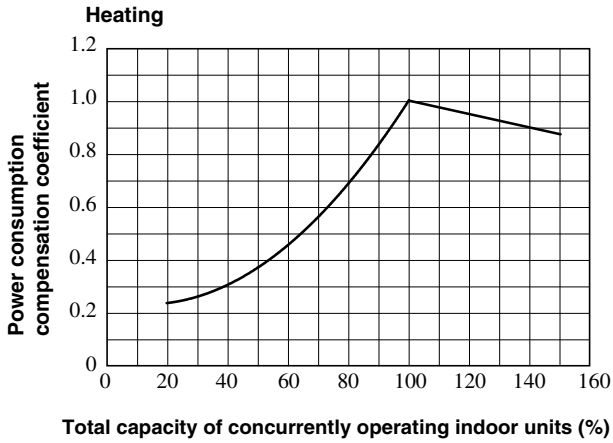

(4) Sensible heat capacity

Model **FDTC22KXE6** Cool Mode

Air flow	Ambient air temp. (°CDB)	Indoor air temperature 21 °CDB 14 °CWB TC	21 °CDB 14 °CWB SHC	23 °CDB 16 °CWB TC	23 °CDB 16 °CWB SHC	26 °CDB 18 °CWB TC	26 °CDB 18 °CWB SHC	27 °CDB 19 °CWB TC	27 °CDB 19 °CWB SHC	28 °CDB 20 °CWB TC	28 °CDB 20 °CWB SHC	31 °CDB 22 °CWB TC	31 °CDB 22 °CWB SHC	33 °CDB 24 °CWB TC	33 °CDB 24 °CWB SHC
Uhi	10			1.98	1.90	2.36	2.22	2.55	2.25	2.72	2.27	3.04	2.48	3.16	2.42
	12			1.98	1.90	2.36	2.22	2.55	2.25	2.71	2.26	3.03	2.47	3.15	2.42
	14			1.98	1.90	2.36	2.22	2.55	2.25	2.71	2.26	3.02	2.46	3.13	2.41
	16			1.98	1.90	2.36	2.22	2.55	2.25	2.71	2.26	3.01	2.46	3.12	2.41
	18			1.98	1.90	2.36	2.22	2.55	2.25	2.70	2.26	3.00	2.46	3.11	2.41
	20			1.98	1.90	2.36	2.22	2.55	2.25	2.70	2.26	2.99	2.46	3.09	2.40
	22			1.97	1.89	2.36	2.22	2.55	2.25	2.69	2.26	2.95	2.44	3.05	2.39
11.4 (m³/min)	24			1.97	1.89	2.36	2.22	2.55	2.25	2.67	2.25	2.91	2.42	3.01	2.38
	26			1.97	1.89	2.35	2.22	2.53	2.24	2.64	2.24	2.87	2.41	2.96	2.36
	28	1.78	1.71	1.97	1.89	2.34	2.22	2.51	2.24	2.61	2.23	2.82	2.40	2.92	2.35
	30	1.78	1.71	1.96	1.88	2.32	2.21	2.48	2.23	2.58	2.22	2.78	2.38	2.87	2.33
	32	1.78	1.71	1.96	1.88	2.30	2.20	2.46	2.22	2.55	2.21	2.74	2.37	2.83	2.32
	34	1.78	1.71	1.95	1.87	2.29	2.19	2.43	2.21	2.51	2.20	2.68	2.35	2.77	2.30
	35	1.78	1.71	1.95	1.87	2.29	2.19	2.41	2.19	2.49	2.20	2.65	2.34	2.74	2.29
	36	1.78	1.71	1.94	1.86	2.27	2.18	2.40	2.20	2.47	2.19	2.60	2.32	2.69	2.28
	38	1.78	1.71	1.94	1.86	2.24	2.15	2.37	2.19	2.42	2.17	2.51	2.29	2.58	2.25
	39	1.78	1.71	1.94	1.86	2.22	2.13	2.36	2.19	2.39	2.16	2.46	2.28	2.53	2.23
	41	1.78	1.71	1.93	1.85	2.15	2.06	2.27	2.15	2.29	2.13	2.35	2.24	2.41	2.17
	43	1.78	1.71	1.92	1.84	2.09	2.01	2.17	2.08	2.19	2.09	2.24	2.15	2.29	2.14

Heat Mode

Air flow	Ambient air temp. DB	Ambient air temp. WB	Indoor air temp. 16 °CDB	18 °CDB	20 °CDB	22 °CDB	24 °CDB
Uhi	-19.8	-20	1.63	1.63	1.63	1.63	1.63
	-17.8	-18	1.73	1.73	1.73	1.73	1.73
	-15.7	-16	1.84	1.84	1.84	1.84	1.84
	-13.7	-14	1.94	1.94	1.94	1.94	1.94
	-11.7	-12	2.05	2.05	2.05	2.05	2.05
	-9.6	-10	2.15	2.15	2.15	2.15	2.15
	-7.5	-8	2.29	2.29	2.29	2.29	2.29
11.4 (m³/min)	-5.5	-6	2.42	2.42	2.42	2.42	2.42
	-3.4	-4	2.50	2.50	2.49	2.47	2.44
	-1.3	-2	2.59	2.58	2.57	2.52	2.47
	0.8	0	2.73	2.69	2.65	2.55	2.46
	3.9	3	2.96	2.85	2.75	2.59	2.44
	7.0	6	3.23	3.02	2.81	2.61	2.42
	10.1	9	3.21	3.00	2.80	2.60	2.40
	13.2	12	3.19	2.99	2.78	2.58	2.37
	16.9	15.5	3.16	2.96	2.76	2.55	2.35

Air flow	Ambient air temp. (°CDB)	Indoor air temperature 21 °CDB 14 °CWB TC	21 °CDB 14 °CWB SHC	23 °CDB 16 °CWB TC	23 °CDB 16 °CWB SHC	26 °CDB 18 °CWB TC	26 °CDB 18 °CWB SHC	27 °CDB 19 °CWB TC	27 °CDB 19 °CWB SHC	28 °CDB 20 °CWB TC	28 °CDB 20 °CWB SHC	31 °CDB 22 °CWB TC	31 °CDB 22 °CWB SHC	33 °CDB 24 °CWB TC	33 °CDB 24 °CWB SHC
Hi	10			1.80	1.73	2.16	1.98	2.33	2.02	2.48	2.04	2.78	2.21	2.89	2.16
	12			1.80	1.73	2.16	1.98	2.33	2.02	2.48	2.04	2.77	2.20	2.87	2.16
	14			1.80	1.73	2.16	1.98	2.33	2.02	2.47	2.03	2.76	2.20	2.86	2.16
	16			1.80	1.73	2.16	1.98	2.33	2.02	2.47	2.03	2.75	2.20	2.85	2.15
	18			1.80	1.73	2.16	1.98	2.33	2.02	2.47	2.03	2.74	2.20	2.84	2.15
	20			1.80	1.73	2.16	1.98	2.33	2.02	2.46	2.03	2.73	2.19	2.82	2.14
	22			1.80	1.73	2.15	1.97	2.33	2.02	2.45	2.02	2.69	2.18	2.78	2.13
9.5 (m³/min)	24			1.80	1.73	2.15	1.97	2.33	2.02	2.44	2.02	2.66	2.17	2.75	2.10
	26			1.80	1.73	2.14	1.97	2.31	2.01	2.41	2.01	2.62	2.15	2.70	2.09
	28	1.63	1.56	1.80	1.73	2.13	1.97	2.29	1.99	2.38	2.00	2.58	2.13	2.66	2.08
	30	1.63	1.56	1.79	1.72	2.12	1.96	2.27	1.98	2.36	1.99	2.54	2.11	2.62	2.07
	32	1.63	1.56	1.79	1.72	2.10	1.96	2.24	1.97	2.33	1.97	2.50	2.10	2.58	2.06
	34	1.63	1.56	1.78	1.71	2.09	1.95	2.21	1.96	2.29	1.96	2.44	2.09	2.53	2.04
	35	1.63	1.56	1.78	1.71	2.09	1.95	2.20	1.96	2.27	1.95	2.42	2.08	2.50	2.04
	36	1.63	1.56	1.78	1.71	2.07	1.95	2.19	1.96	2.25	1.94	2.37	2.07	2.45	2.02
	38	1.63	1.56	1.77	1.70	2.04	1.94	2.17	1.95	2.21	1.93	2.29	2.04	2.36	2.00
	39	1.63	1.56	1.77	1.70	2.03	1.93	2.16	1.94	2.19	1.92	2.24	2.03	2.31	1.98
	41	1.63	1.56	1.76	1.69	1.97	1.89	2.07	1.91	2.09	1.89	2.14	1.99	2.20	1.95
	43	1.63	1.56	1.76	1.69	1.91	1.83	1.98	1.88	2.00	1.86	2.05	1.96	2.09	1.92

Air flow	Ambient air temp. DB	Ambient air temp. WB	Indoor air temp. 16 °CDB	18 °CDB	20 °CDB	22 °CDB	24 °CDB
Hi	-19.8	-20	1.45	1.45	1.45	1.45	1.45
	-17.8	-18	1.54	1.54	1.54	1.54	1.54
	-15.7	-16	1.64	1.64	1.64	1.64	1.64
	-13.7	-14	1.73	1.73	1.73	1.73	1.73
	-11.7	-12	1.82	1.82	1.82	1.82	1.82
	-9.6	-10	1.92	1.92	1.92	1.92	1.92
	-7.5	-8	2.03	2.03	2.03	2.03	2.03
9.5 (m³/min)	-5.5	-6	2.15	2.15	2.15	2.15	2.15
	-3.4	-4	2.23	2.22	2.22	2.20	2.18
	-1.3	-2	2.30	2.29	2.29	2.24	2.20
	0.8	0	2.43	2.39	2.36	2.27	2.19
	3.9	3	2.63	2.54	2.44	2.31	2.17
	7.0	6	2.88	2.69	2.50	2.33	2.15
	10.1	9	2.86	2.67	2.49	2.31	2.13
	13.2	12	2.84	2.66	2.48	2.29	2.11
	16.9	15.5	2.82	2.63	2.45	2.27	2.09

Air flow	Ambient air temp. (°CDB)	Indoor air temperature 21 °CDB 14 °CWB TC	21 °CDB 14 °CWB SHC	23 °CDB 16 °CWB TC	23 °CDB 16 °CWB SHC	26 °CDB 18 °CWB TC	26 °CDB 18 °CWB SHC	27 °CDB 19 °CWB TC	27 °CDB 19 °CWB SHC	28 °CDB 20 °CWB TC	28 °CDB 20 °CWB SHC	31 °CDB 22 °CWB TC	31 °CDB 22 °CWB SHC	33 °CDB 24 °CWB TC	33 °CDB 24 °CWB SHC
Me	10			1.70	1.62	2.03	1.83	2.19	1.85	2.33	1.86	2.61	2.03	2.72	1.99
	12			1.70	1.62	2.03	1.83	2.19	1.85	2.33	1.86	2.61	2.03	2.70	1.99
	14			1.70	1.62	2.03	1.83	2.19	1.85	2.33	1.86	2.60	2.03	2.69	1.98
	16			1.70	1.62	2.03	1.83	2.19	1.85	2.32	1.86	2.59	2.03	2.68	1.98
	18			1.70	1.62	2.03	1.83	2.19	1.85	2.32	1.86	2.58	2.03	2.67	1.98
	20			1.70	1.62	2.03	1.83	2.19	1.85	2.32	1.86	2.57	2.02	2.66	1.97
	22			1.69	1.62	2.03	1.83	2.19	1.85	2.31	1.86	2.54	2.01	2.62	1.95
8.5 (m³/min)	24			1.69	1.62	2.03	1.83	2.19	1.85	2.30	1.86	2.50	2.00	2.58	1.94
	26			1.69	1.62	2.02	1.82	2.17	1.84	2.27	1.85	2.46	1.97	2.54	1.93
	28	1.53	1.47	1.69	1.62	2.01	1.82	2.15	1.84	2.24	1.84	2.42	1.96	2.50	1.92
	30	1.53	1.47	1.68	1.61	1.99	1.81	2.13	1.83	2.22	1.83	2.39	1.95	2.47	1.91
	32	1.53	1.47	1.68	1.61	1.98	1.81	2.11	1.82	2.19	1.82	2.35	1.94	2.43	1.90
	34	1.53	1.47	1.68	1.61	1.97	1.81	2.08	1.81	2.16	1.81	2.30	1.92	2.38	1.88
	35	1.53	1.47	1.67	1.60	1.97	1.81	2.07	1.80	2.14	1.80	2.28	1.92	2.35	1.87
	36	1.53	1.47	1.67	1.60	1.95	1.79	2.06	1.81	2.12	1.80	2.23	1.90	2.31	1.86
	38	1.53	1.47	1.67	1.60	1.92	1.78	2.04	1.80	2.08	1.78	2.15	1.87	2.22	1.84
	39	1.53	1.47	1.66	1.59	1.91	1.78	2.03	1.80	2.06	1.78	2.11	1.86	2.17	1.82
	41	1.53	1.47	1.66	1.59	1.85	1.76	1.95	1.77	1.97	1.74	2.02	1.83	2.07	1.79
	43	1.53	1.47	1.65	1.58	1.79	1.72	1.86	1.73	1.88	1.71	1.92	1.80	1.97	1.76

Air flow	Ambient air temp. DB	Ambient air temp. WB	Indoor air temp. 16 °CDB	18 °CDB	20 °CDB	22 °CDB	24 °CDB
Me	-19.8	-20	1.35	1.35	1.35	1.35	1.35
	-17.8	-18	1.43	1.43	1.43	1.43	1.43
	-15.7	-16	1.52	1.52	1.52	1.52	1.52
	-13.7	-14	1.61	1.61	1.61	1.61	1.61
	-11.7	-12	1.69	1.69	1.69	1.69	1.69
	-9.6	-10	1.78	1.78	1.78	1.78	1.78
	-7.5	-8	1.89	1.89	1.89	1.89	1.89
8.5 (m³/min)	-5.5	-6	2.00	2.00	2.00	2.00	2.00
	-3.4	-4	2.06	2.06	2.06	2.04	2.02
	-1.3	-2	2.13	2.13	2.12	2.08	2.04
	0.8	0	2.25	2.22	2.19	2.11	2.03
	3.9	3	2.44	2.35	2.27	2.14	2.01
	7.0	6	2.67	2.49	2.32	2.16	2.00
	10.1	9	2.65	2.48	2.31	2.14	1.98
	13.2	12	2.63	2.47	2.30	2.13	1.96
	16.9	15.5	2.61	2.44	2.28	2.11	1.94

Air flow	Ambient air temp. (°CDB)	Indoor air temperature 21 °CDB 14 °CWB TC	21 °CDB 14 °CWB SHC	23 °CDB 16 °CWB TC	23 °CDB 16 °CWB SHC	26 °CDB 18 °CWB TC	26 °CDB 18 °CWB SHC	27 °CDB 19 °CWB TC	27 °CDB 19 °CWB SHC	28 °CDB 20 °CWB TC	28 °CDB 20 °CWB SHC	31 °CDB 22 °CWB TC	31 °CDB 22 °CWB SHC	33 °CDB 24 °CWB TC	33 °CDB 24 °CWB SHC
Lo	10			1.64	1.54	1.96	1.74	2.12	1.76	2.26	1.79	2.53	1.94	2.62	1.89
	12			1.64	1.54	1.96	1.74	2.12	1.76	2.25	1.79	2.52	1.94	2.61	1.89
	14			1.64	1.54	1.96	1.74	2.12	1.76	2.25	1.79	2.51	1.93	2.60	1.89
	16			1.64	1.54	1.96	1.74	2.12	1.76	2.25	1.79	2.50	1.93	2.59	1.89
	18			1.64	1.54	1.96	1.74	2.12	1.76	2.24	1.78	2.49	1.92	2.58	1.88
	20			1.64	1.54	1.96	1.74	2.12	1.76	2.24	1.78	2.48	1.92	2.57	1.88
	22			1.64	1.54	1.96	1.74	2.12	1.76	2.23	1.78	2.45	1.91	2.53	1.87
8 (m³/min)	24			1.63	1.54	1.96	1.74	2.12	1.76	2.22	1.76	2.42	1.90	2.50	1.86
	26			1.63	1.54	1.95	1.73	2.10	1.76	2.19	1.75	2.38	1.89	2.46	1.83
	28	1.48	1.42	1.63	1.54	1.94	1.73	2.08	1.75	2.17	1.75	2.34	1.86	2.42	1.82
	30	1.48	1.42	1.63	1.54	1.93	1.73	2.06	1.74	2.14	1.74	2.31	1.85	2.38	1.81
	32	1.48	1.42	1.62	1.53	1.91	1.72	2.04	1.74	2.12	1.73	2.27	1.84	2.35	1.80
	34	1.48	1.42	1.62	1.53	1.90	1.72	2.01	1.73	2.08	1.72	2.22	1.83	2.30	1.79
	35	1.48	1.42	1.62	1.53	1.90	1.72	2.00	1.72	2.07	1.72	2.20	1.82	2.27	1.78
	36	1.48	1.42	1.61	1.53	1.89	1.71	1.99	1.72	2.05	1.71	2.16	1.81	2.23	1.77
	38	1.48	1.42	1.61	1.53	1.86	1.70	1.97	1.71	2.01	1.70	2.08	1.78	2.14	1.74
	39	1.48	1.42	1.61	1.53	1.84	1.69	1.96	1.71	1.99	1.69	2.04	1.77	2.10	1.73
	41	1.48	1.42	1.60	1.53	1.79	1.67	1.88	1.68	1.90	1.66	1.95	1.74	2.00	1.70
	43	1.48	1.42	1.60	1.53	1.73	1.65	1.80	1.65	1.82	1.63	1.86	1.71	1.90	1.67

Air flow	Ambient air temp. DB	Ambient air temp. WB	Indoor air temp. 16 °CDB	18 °CDB	20 °CDB	22 °CDB	24 °CDB
Lo	-19.8	-20	1.29	1.29	1.29	1.29	1.29
	-17.8	-18	1.38	1.38	1.38	1.38	1.38
	-15.7	-16	1.46	1.46	1.46	1.46	1.46
	-13.7	-14	1.54	1.54	1.54	1.54	1.54
	-11.7	-12	1.63	1.63	1.63	1.63	1.63
	-9.6	-10	1.71	1.71	1.71	1.71	1.71
	-7.5	-8	1.81	1.81	1.81	1.81	1.81
8 (m³/min)	-5.5	-6	1.92	1.92	1.92	1.92	1.92
	-3.4	-4	1.98	1.98	1.98	1.96	1.94
	-1.3	-2	2.05	2.05	2.04	2.00	1.96
	0.8	0	2.16	2.13	2.10	2.03	1.95
	3.9	3	2.35	2.26	2.18	2.06	1.93
	7.0	6	2.56	2.40	2.23	2.07	1.92
	10.1	9	2.55	2.38	2.22	2.06	1.90
	13.2	12	2.53	2.37	2.21	2.05	1.88
	16.9	15.5	2.51	2.35	2.19	2.03	1.86

Note(1) This data shows average statuses out of those possible to occur in the system control.
(Depending on controls, there may be ranges where the operation is not conducted continuously.)
(2) Symbols are as follows
TC :Total cooling capacity(kW)
SHC :Sensible heat capacity(kW)

Cool mode	Uhi	Hi	Me	Lo
Air flow	11.40	9.5	8.5	8
TC	2.41	2.20	2.07	2.00
SHF	0.91	0.89	0.87	0.86

Heat mode	Uhi	Hi	Me	Lo
Air flow	11.4	9.5	8.5	8
Heating capacity	2.81	2.50	2.32	2.23

Model **FDTC28KXE6** Cool Mode

Air flow	Ambient air temp. (℃DB)	Indoor air temperature 21 ℃DB 14 ℃WB TC	21 ℃DB 14 ℃WB SHC	23 ℃DB 16 ℃WB TC	23 ℃DB 16 ℃WB SHC	26 ℃DB 18 ℃WB TC	26 ℃DB 18 ℃WB SHC	27 ℃DB 19 ℃WB TC	27 ℃DB 19 ℃WB SHC	28 ℃DB 20 ℃WB TC	28 ℃DB 20 ℃WB SHC	31 ℃DB 22 ℃WB TC	31 ℃DB 22 ℃WB SHC	33 ℃DB 24 ℃WB TC	33 ℃DB 24 ℃WB SHC
Uhi	10			2.51	2.19	3.00	2.48	3.24	2.53	3.45	2.56	3.87	2.77	4.01	2.70
11.4	12			2.51	2.19	3.00	2.48	3.24	2.53	3.45	2.56	3.85	2.77	4.00	2.70
(m³/min)	14			2.51	2.19	3.00	2.48	3.24	2.53	3.44	2.56	3.84	2.76	3.98	2.69
	16			2.51	2.19	3.00	2.48	3.24	2.53	3.44	2.56	3.82	2.75	3.96	2.68
	18			2.51	2.19	3.00	2.48	3.24	2.53	3.43	2.55	3.81	2.75	3.94	2.68
	20			2.51	2.19	3.00	2.48	3.24	2.53	3.43	2.55	3.80	2.75	3.93	2.68
	22			2.50	2.19	3.00	2.48	3.24	2.53	3.41	2.54	3.75	2.72	3.87	2.65
	24			2.50	2.19	3.00	2.48	3.24	2.53	3.40	2.54	3.70	2.71	3.82	2.64
	26			2.50	2.19	2.98	2.47	3.21	2.52	3.36	2.53	3.64	2.69	3.76	2.62
	28	2.26	2.17	2.50	2.19	2.97	2.47	3.18	2.51	3.32	2.51	3.58	2.66	3.70	2.60
	30	2.26	2.17	2.49	2.19	2.95	2.46	3.15	2.49	3.28	2.49	3.53	2.65	3.65	2.56
	32	2.26	2.17	2.48	2.18	2.92	2.45	3.12	2.48	3.24	2.48	3.47	2.62	3.59	2.55
	34	2.26	2.17	2.48	2.18	2.91	2.44	3.08	2.46	3.19	2.46	3.40	2.58	3.52	2.53
	35	2.26	2.17	2.47	2.18	2.91	2.44	3.06	2.45	3.16	2.44	3.36	2.57	3.48	2.52
	36	2.26	2.17	2.47	2.18	2.89	2.44	3.04	2.45	3.13	2.43	3.30	2.56	3.41	2.50
	38	2.26	2.17	2.46	2.18	2.84	2.42	3.01	2.44	3.07	2.41	3.18	2.52	3.28	2.46
	39	2.26	2.17	2.46	2.18	2.82	2.41	3.00	2.44	3.04	2.40	3.12	2.50	3.21	2.44
	41	2.26	2.17	2.45	2.17	2.73	2.37	2.88	2.38	2.91	2.35	2.98	2.45	3.06	2.39
	43	2.26	2.17	2.44	2.17	2.65	2.34	2.75	2.33	2.78	2.31	2.84	2.41	2.91	2.34

Heat Mode

Air flow	Ambient air temp. DB	Ambient air temp. WB	Indoor air temp. 16 ℃CDB	18 ℃CDB	20 ℃CDB	22 ℃CDB	24 ℃CDB
Uhi	-19.8	-20	2.08	2.08	2.08	2.08	2.08
11.4	-17.8	-18	2.22	2.22	2.22	2.22	2.22
(m³/min)	-15.7	-16	2.35	2.35	2.35	2.35	2.35
	-13.7	-14	2.48	2.48	2.48	2.48	2.48
	-11.7	-12	2.62	2.62	2.62	2.62	2.62
	-9.6	-10	2.75	2.75	2.75	2.75	2.75
	-7.5	-8	2.92	2.92	2.92	2.92	2.92
	-5.5	-6	3.09	3.09	3.09	3.09	3.09
	-3.4	-4	3.20	3.19	3.19	3.15	3.12
	-1.3	-2	3.30	3.29	3.28	3.22	3.16
	0.8	0	3.48	3.43	3.38	3.26	3.14
	3.9	3	3.78	3.64	3.51	3.31	3.11
	7.0	6	4.13	3.86	3.59	3.34	3.09
	10.1	9	4.10	3.84	3.58	3.32	3.06
	13.2	12	4.07	3.81	3.55	3.29	3.03
	16.9	15.5	4.04	3.78	3.52	3.26	3.00

Air flow	Ambient air temp. (℃DB)	Indoor air temperature 21 ℃DB 14 ℃WB TC	21 ℃DB 14 ℃WB SHC	23 ℃DB 16 ℃WB TC	23 ℃DB 16 ℃WB SHC	26 ℃DB 18 ℃WB TC	26 ℃DB 18 ℃WB SHC	27 ℃DB 19 ℃WB TC	27 ℃DB 19 ℃WB SHC	28 ℃DB 20 ℃WB TC	28 ℃DB 20 ℃WB SHC	31 ℃DB 22 ℃WB TC	31 ℃DB 22 ℃WB SHC	33 ℃DB 24 ℃WB TC	33 ℃DB 24 ℃WB SHC
Hi	10			2.30	1.97	2.74	2.22	2.97	2.27	3.16	2.29	3.54	2.48	3.67	2.41
9.5	12			2.30	1.97	2.74	2.22	2.97	2.27	3.15	2.29	3.52	2.48	3.66	2.41
(m³/min)	14			2.30	1.97	2.74	2.22	2.97	2.27	3.15	2.29	3.51	2.47	3.64	2.40
	16			2.30	1.97	2.74	2.22	2.97	2.27	3.14	2.28	3.50	2.47	3.63	2.40
	18			2.30	1.97	2.74	2.22	2.97	2.27	3.14	2.28	3.49	2.47	3.61	2.39
	20			2.30	1.97	2.74	2.22	2.97	2.27	3.14	2.28	3.47	2.45	3.59	2.39
	22			2.29	1.97	2.74	2.22	2.97	2.27	3.12	2.28	3.43	2.43	3.54	2.37
	24			2.29	1.97	2.74	2.22	2.97	2.27	3.11	2.27	3.39	2.42	3.50	2.36
	26			2.29	1.97	2.73	2.22	2.94	2.26	3.07	2.26	3.33	2.40	3.44	2.35
	28	2.07	1.94	2.28	1.96	2.72	2.22	2.91	2.24	3.03	2.25	3.28	2.39	3.39	2.33
	30	2.07	1.94	2.28	1.96	2.70	2.20	2.88	2.23	3.00	2.23	3.23	2.37	3.34	2.31
	32	2.07	1.94	2.27	1.96	2.67	2.19	2.86	2.23	2.96	2.22	3.18	2.35	3.29	2.30
	34	2.07	1.94	2.27	1.96	2.66	2.19	2.82	2.21	2.92	2.20	3.11	2.33	3.22	2.27
	35	2.07	1.94	2.26	1.95	2.66	2.19	2.80	2.18	2.89	2.19	3.08	2.32	3.18	2.26
	36	2.07	1.94	2.26	1.95	2.64	2.18	2.79	2.20	2.86	2.18	3.02	2.29	3.12	2.24
	38	2.07	1.94	2.25	1.95	2.60	2.16	2.76	2.18	2.81	2.16	2.91	2.26	3.00	2.20
	39	2.07	1.94	2.25	1.95	2.58	2.16	2.74	2.18	2.78	2.15	2.86	2.24	2.94	2.18
	41	2.07	1.94	2.24	1.94	2.50	2.12	2.63	2.13	2.66	2.10	2.73	2.19	2.80	2.13
	43	2.07	1.94	2.24	1.94	2.43	2.09	2.52	2.09	2.55	2.06	2.60	2.13	2.66	2.08

Air flow	Ambient air temp. DB	Ambient air temp. WB	Indoor air temp. 16 ℃CDB	18 ℃CDB	20 ℃CDB	22 ℃CDB	24 ℃CDB
Hi	-19.8	-20	1.86	1.86	1.86	1.86	1.86
9.5	-17.8	-18	1.98	1.98	1.98	1.98	1.98
(m³/min)	-15.7	-16	2.09	2.09	2.09	2.09	2.09
	-13.7	-14	2.21	2.21	2.21	2.21	2.21
	-11.7	-12	2.33	2.33	2.33	2.33	2.33
	-9.6	-10	2.45	2.45	2.45	2.45	2.45
	-7.5	-8	2.60	2.60	2.60	2.60	2.60
	-5.5	-6	2.75	2.75	2.75	2.75	2.75
	-3.4	-4	2.85	2.84	2.84	2.81	2.78
	-1.3	-2	2.94	2.94	2.93	2.87	2.82
	0.8	0	3.10	3.06	3.02	2.91	2.80
	3.9	3	3.37	3.25	3.13	2.95	2.78
	7.0	6	3.68	3.44	3.20	2.98	2.75
	10.1	9	3.66	3.42	3.19	2.96	2.73
	13.2	12	3.63	3.40	3.17	2.94	2.70
	16.9	15.5	3.60	3.37	3.14	2.91	2.68

Air flow	Ambient air temp. (℃DB)	Indoor air temperature 21 ℃DB 14 ℃WB TC	21 ℃DB 14 ℃WB SHC	23 ℃DB 16 ℃WB TC	23 ℃DB 16 ℃WB SHC	26 ℃DB 18 ℃WB TC	26 ℃DB 18 ℃WB SHC	27 ℃DB 19 ℃WB TC	27 ℃DB 19 ℃WB SHC	28 ℃DB 20 ℃WB TC	28 ℃DB 20 ℃WB SHC	31 ℃DB 22 ℃WB TC	31 ℃DB 22 ℃WB SHC	33 ℃DB 24 ℃WB TC	33 ℃DB 24 ℃WB SHC
Me	10			2.16	1.82	2.59	2.06	2.80	2.10	2.98	2.13	3.34	2.30	3.46	2.23
8.5	12			2.16	1.82	2.59	2.06	2.80	2.10	2.97	2.12	3.32	2.29	3.45	2.23
(m³/min)	14			2.16	1.82	2.59	2.06	2.80	2.10	2.97	2.12	3.31	2.29	3.43	2.22
	16			2.16	1.82	2.59	2.06	2.80	2.10	2.97	2.12	3.30	2.29	3.42	2.22
	18			2.16	1.82	2.59	2.06	2.80	2.10	2.96	2.12	3.29	2.28	3.40	2.21
	20			2.16	1.82	2.59	2.06	2.80	2.10	2.96	2.12	3.27	2.28	3.39	2.21
	22			2.16	1.82	2.59	2.06	2.80	2.10	2.94	2.11	3.23	2.25	3.34	2.19
	24			2.16	1.82	2.58	2.05	2.80	2.10	2.93	2.11	3.19	2.24	3.30	2.18
	26			2.16	1.82	2.57	2.05	2.77	2.09	2.90	2.09	3.14	2.22	3.25	2.17
	28	1.95	1.79	2.15	1.81	2.56	2.04	2.75	2.08	2.86	2.08	3.09	2.21	3.19	2.15
	30	1.95	1.79	2.15	1.81	2.54	2.04	2.72	2.07	2.83	2.07	3.04	2.19	3.15	2.13
	32	1.95	1.79	2.14	1.81	2.52	2.03	2.69	2.05	2.79	2.05	3.00	2.18	3.10	2.12
	34	1.95	1.79	2.14	1.81	2.51	2.03	2.66	2.04	2.75	2.04	2.93	2.15	3.03	2.10
	35	1.95	1.79	2.13	1.80	2.51	2.03	2.64	2.03	2.73	2.03	2.90	2.14	3.00	2.09
	36	1.95	1.79	2.13	1.80	2.49	2.01	2.63	2.03	2.70	2.02	2.85	2.12	2.94	2.07
	38	1.95	1.79	2.13	1.80	2.45	2.00	2.60	2.02	2.65	2.00	2.75	2.08	2.83	2.03
	39	1.95	1.79	2.12	1.79	2.43	1.99	2.59	2.02	2.62	1.99	2.69	2.06	2.77	2.01
	41	1.95	1.79	2.12	1.79	2.36	1.96	2.48	1.97	2.51	1.94	2.57	2.02	2.64	1.95
	43	1.95	1.79	2.11	1.79	2.29	1.93	2.38	1.93	2.40	1.90	2.45	1.97	2.51	1.92

Air flow	Ambient air temp. DB	Ambient air temp. WB	Indoor air temp. 16 ℃CDB	18 ℃CDB	20 ℃CDB	22 ℃CDB	24 ℃CDB
Me	-19.8	-20	1.72	1.72	1.72	1.72	1.72
8.5	-17.8	-18	1.83	1.83	1.83	1.83	1.83
(m³/min)	-15.7	-16	1.94	1.94	1.94	1.94	1.94
	-13.7	-14	2.06	2.06	2.06	2.06	2.06
	-11.7	-12	2.17	2.17	2.17	2.17	2.17
	-9.6	-10	2.28	2.28	2.28	2.28	2.28
	-7.5	-8	2.42	2.42	2.42	2.42	2.42
	-5.5	-6	2.55	2.55	2.55	2.55	2.55
	-3.4	-4	2.64	2.64	2.64	2.61	2.58
	-1.3	-2	2.73	2.72	2.72	2.67	2.61
	0.8	0	2.88	2.84	2.80	2.70	2.60
	3.9	3	3.13	3.01	2.90	2.74	2.58
	7.0	6	3.42	3.19	2.97	2.76	2.55
	10.1	9	3.39	3.18	2.96	2.75	2.53
	13.2	12	3.37	3.16	2.94	2.72	2.51
	16.9	15.5	3.34	3.13	2.91	2.70	2.48

Air flow	Ambient air temp. (℃DB)	Indoor air temperature 21 ℃DB 14 ℃WB TC	21 ℃DB 14 ℃WB SHC	23 ℃DB 16 ℃WB TC	23 ℃DB 16 ℃WB SHC	26 ℃DB 18 ℃WB TC	26 ℃DB 18 ℃WB SHC	27 ℃DB 19 ℃WB TC	27 ℃DB 19 ℃WB SHC	28 ℃DB 20 ℃WB TC	28 ℃DB 20 ℃WB SHC	31 ℃DB 22 ℃WB TC	31 ℃DB 22 ℃WB SHC	33 ℃DB 24 ℃WB TC	33 ℃DB 24 ℃WB SHC
Lo	10			2.09	1.73	2.50	1.96	2.70	2.00	2.88	2.03	3.22	2.19	3.34	2.14
8	12			2.09	1.73	2.50	1.96	2.70	2.00	2.87	2.02	3.21	2.19	3.33	2.14
(m³/min)	14			2.09	1.73	2.50	1.96	2.70	2.00	2.87	2.02	3.20	2.19	3.32	2.13
	16			2.09	1.73	2.50	1.96	2.70	2.00	2.86	2.02	3.19	2.18	3.30	2.12
	18			2.09	1.73	2.50	1.96	2.70	2.00	2.86	2.02	3.17	2.17	3.29	2.12
	20			2.09	1.73	2.50	1.96	2.70	2.00	2.86	2.02	3.16	2.17	3.27	2.11
	22			2.09	1.73	2.50	1.96	2.70	2.00	2.84	2.01	3.12	2.15	3.23	2.09
	24			2.08	1.73	2.50	1.96	2.70	2.00	2.83	2.01	3.08	2.14	3.18	2.08
	26			2.08	1.73	2.49	1.96	2.68	2.00	2.80	2.00	3.03	2.11	3.13	2.06
	28	1.89	1.71	2.08	1.73	2.47	1.95	2.65	1.98	2.76	1.99	2.99	2.10	3.09	2.05
	30	1.89	1.71	2.08	1.73	2.45	1.94	2.63	1.98	2.73	1.97	2.94	2.09	3.04	2.03
	32	1.89	1.71	2.07	1.73	2.44	1.94	2.60	1.96	2.70	1.96	2.89	2.07	2.99	2.02
	34	1.89	1.71	2.06	1.72	2.43	1.93	2.57	1.95	2.66	1.94	2.83	2.05	2.93	2.00
	35	1.89	1.71	2.06	1.72	2.42	1.93	2.55	1.94	2.63	1.93	2.80	2.04	2.90	1.99
	36	1.89	1.71	2.06	1.72	2.40	1.92	2.54	1.94	2.61	1.93	2.75	2.02	2.84	1.97
	38	1.89	1.71	2.05	1.72	2.37	1.91	2.51	1.93	2.56	1.91	2.65	1.98	2.73	1.93
	39	1.89	1.71	2.05	1.72	2.35	1.90	2.50	1.92	2.53	1.89	2.60	1.97	2.68	1.92
	41	1.89	1.71	2.04	1.72	2.28	1.87	2.40	1.88	2.43	1.86	2.49	1.92	2.55	1.87
	43	1.89	1.71	2.04	1.72	2.21	1.84	2.30	1.84	2.32	1.81	2.37	1.88	2.42	1.82

Air flow	Ambient air temp. DB	Ambient air temp. WB	Indoor air temp. 16 ℃CDB	18 ℃CDB	20 ℃CDB	22 ℃CDB	24 ℃CDB
Lo	-19.8	-20	1.66	1.66	1.66	1.66	1.66
8	-17.8	-18	1.77	1.77	1.77	1.77	1.77
(m³/min)	-15.7	-16	1.87	1.87	1.87	1.87	1.87
	-13.7	-14	1.98	1.98	1.98	1.98	1.98
	-11.7	-12	2.09	2.09	2.09	2.09	2.09
	-9.6	-10	2.19	2.19	2.19	2.19	2.19
	-7.5	-8	2.33	2.33	2.33	2.33	2.33
	-5.5	-6	2.46	2.46	2.46	2.46	2.46
	-3.4	-4	2.55	2.54	2.54	2.51	2.49
	-1.3	-2	2.63	2.62	2.62	2.57	2.52
	0.8	0	2.77	2.73	2.70	2.60	2.50
	3.9	3	3.01	2.90	2.80	2.64	2.48
	7.0	6	3.29	3.07	2.86	2.66	2.46
	10.1	9	3.27	3.06	2.85	2.64	2.44
	13.2	12	3.25	3.04	2.83	2.62	2.42
	16.9	15.5	3.22	3.01	2.81	2.60	2.39

Note(1) This data shows average statuses out of those possible to occur in the system control.
(Depending on controls, there may be ranges where the operation is not conducted continuously.)
(2) Symbols are as follows
TC :Total cooling capacity(kW)
SHC :Sensible heat capacity(kW)

Cool mode	Uhi	Hi	Me	Lo
Air flow	11.40	9.5	8.5	8
TC	3.06	2.80	2.64	2.55
SHF	0.80	0.78	0.77	0.76

Heat mode	Uhi	Hi	Me	Lo
Air flow	11.4	9.5	8.5	8
Heating capacity	3.59	3.20	2.97	2.86

Model **FDTC36KXE6** Cool Mode

Air flow	Ambient air temp. (℃DB)	Indoor air temperature 21 ℃CDB 14 ℃CWB TC	21 ℃CDB 14 ℃CWB SHC	23 ℃CDB 16 ℃CWB TC	23 ℃CDB 16 ℃CWB SHC	26 ℃CDB 18 ℃CWB TC	26 ℃CDB 18 ℃CWB SHC	27 ℃CDB 19 ℃CWB TC	27 ℃CDB 19 ℃CWB SHC	28 ℃CDB 20 ℃CWB TC	28 ℃CDB 20 ℃CWB SHC	31 ℃CDB 22 ℃CWB TC	31 ℃CDB 22 ℃CWB SHC	33 ℃CDB 24 ℃CWB TC	33 ℃CDB 24 ℃CWB SHC
	10			3.34	2.93	3.99	3.30	4.31	3.36	4.59	3.40	5.14	3.67	5.34	3.58
	12			3.34	2.93	3.99	3.30	4.31	3.36	4.58	3.40	5.12	3.66	5.32	3.58
	14			3.34	2.93	3.99	3.30	4.31	3.36	4.58	3.40	5.10	3.66	5.29	3.57
	16			3.34	2.93	3.99	3.30	4.31	3.36	4.57	3.40	5.09	3.65	5.27	3.56
	18			3.34	2.93	3.99	3.30	4.31	3.36	4.57	3.40	5.07	3.65	5.25	3.56
Uhi	20			3.34	2.93	3.99	3.30	4.31	3.36	4.56	3.39	5.05	3.64	5.22	3.55
	22			3.33	2.92	3.99	3.30	4.31	3.36	4.54	3.38	4.98	3.61	5.15	3.52
12	24			3.33	2.92	3.99	3.30	4.31	3.36	4.52	3.38	4.92	3.59	5.08	3.50
(m^3/min)	26			3.32	2.92	3.97	3.29	4.27	3.34	4.46	3.36	4.84	3.56	5.00	3.48
	28	3.01	2.88	3.32	2.92	3.95	3.29	4.23	3.33	4.41	3.33	4.77	3.54	4.92	3.45
	30	3.01	2.88	3.31	2.91	3.92	3.27	4.19	3.31	4.36	3.31	4.69	3.51	4.85	3.43
	32	3.01	2.88	3.30	2.91	3.89	3.26	4.15	3.30	4.31	3.29	4.62	3.49	4.78	3.41
	34	3.01	2.88	3.29	2.90	3.87	3.25	4.10	3.28	4.24	3.27	4.52	3.46	4.68	3.38
	35	3.01	2.88	3.29	2.90	3.87	3.25	4.07	3.26	4.20	3.25	4.47	3.44	4.63	3.36
	36	3.01	2.88	3.28	2.90	3.84	3.24	4.05	3.26	4.16	3.24	4.39	3.41	4.54	3.33
	38	3.01	2.88	3.28	2.90	3.78	3.21	4.01	3.24	4.08	3.21	4.23	3.36	4.36	3.28
	39	3.01	2.88	3.27	2.90	3.75	3.20	3.99	3.24	4.04	3.19	4.15	3.32	4.27	3.24
	41	3.01	2.88	3.26	2.89	3.64	3.16	3.83	3.17	3.87	3.13	3.97	3.26	4.07	3.18
	43	3.01	2.88	3.25	2.89	3.53	3.11	3.66	3.11	3.70	3.06	3.78	3.20	3.87	3.12

Heat Mode

Air flow	Ambient air temp. DB	Ambient air temp. WB	Indoor air temp. 16 ℃CDB	18 ℃CDB	20 ℃CDB	22 ℃CDB	24 ℃CDB
	-19.8	-20	2.68	2.68	2.68	2.68	2.68
	-17.8	-18	2.85	2.85	2.85	2.85	2.85
	-15.7	-16	3.02	3.02	3.02	3.02	3.02
	-13.7	-14	3.20	3.20	3.20	3.20	3.20
	-11.7	-12	3.37	3.37	3.37	3.37	3.37
Uhi	-9.6	-10	3.54	3.54	3.54	3.54	3.54
	-7.5	-8	3.76	3.76	3.76	3.76	3.76
12	-5.5	-6	3.97	3.97	3.97	3.97	3.97
(m^3/min)	-3.4	-4	4.11	4.11	4.10	4.06	4.02
	-1.3	-2	4.25	4.24	4.23	4.15	4.07
	0.8	0	4.48	4.42	4.35	4.20	4.04
	3.9	3	4.86	4.69	4.52	4.26	4.01
	7.0	6	5.31	4.97	4.62	4.30	3.97
	10.1	9	5.28	4.94	4.60	4.27	3.94
	13.2	12	5.24	4.91	4.57	4.24	3.90
	16.9	15.5	5.20	4.87	4.53	4.20	3.86

Air flow	Ambient air temp. (℃DB)	Indoor air temperature 21 ℃CDB 14 ℃CWB TC	21 ℃CDB 14 ℃CWB SHC	23 ℃CDB 16 ℃CWB TC	23 ℃CDB 16 ℃CWB SHC	26 ℃CDB 18 ℃CWB TC	26 ℃CDB 18 ℃CWB SHC	27 ℃CDB 19 ℃CWB TC	27 ℃CDB 19 ℃CWB SHC	28 ℃CDB 20 ℃CWB TC	28 ℃CDB 20 ℃CWB SHC	31 ℃CDB 22 ℃CWB TC	31 ℃CDB 22 ℃CWB SHC	33 ℃CDB 24 ℃CWB TC	33 ℃CDB 24 ℃CWB SHC
	10			2.95	2.52	3.53	2.85	3.82	2.91	4.06	2.94	4.55	3.18	4.72	3.10
	12			2.95	2.52	3.53	2.85	3.82	2.91	4.05	2.94	4.53	3.17	4.70	3.10
	14			2.95	2.52	3.53	2.85	3.82	2.91	4.05	2.94	4.51	3.17	4.68	3.09
	16			2.95	2.52	3.53	2.85	3.82	2.91	4.04	2.93	4.50	3.16	4.66	3.08
	18			2.95	2.52	3.53	2.85	3.82	2.91	4.04	2.93	4.48	3.15	4.64	3.08
Hi	20			2.95	2.52	3.53	2.85	3.82	2.91	4.03	2.93	4.47	3.15	4.62	3.07
	22			2.95	2.52	3.53	2.85	3.82	2.91	4.01	2.92	4.41	3.13	4.56	3.05
10	24			2.94	2.51	3.52	2.84	3.82	2.91	3.99	2.91	4.35	3.11	4.49	3.02
(m^3/min)	26			2.94	2.51	3.51	2.84	3.78	2.89	3.95	2.90	4.28	3.08	4.43	3.00
	28	2.66	2.49	2.94	2.51	3.49	2.83	3.74	2.88	3.90	2.88	4.22	3.06	4.36	2.98
	30	2.66	2.49	2.93	2.51	3.47	2.82	3.71	2.87	3.86	2.86	4.15	3.03	4.29	2.96
	32	2.66	2.49	2.92	2.51	3.44	2.81	3.67	2.85	3.81	2.84	4.09	3.01	4.23	2.94
	34	2.66	2.49	2.91	2.50	3.43	2.81	3.62	2.83	3.75	2.82	4.00	2.98	4.14	2.91
	35	2.66	2.49	2.91	2.50	3.42	2.80	3.60	2.81	3.72	2.81	3.96	2.97	4.09	2.89
	36	2.66	2.49	2.91	2.50	3.39	2.78	3.58	2.81	3.68	2.79	3.89	2.94	4.02	2.87
	38	2.66	2.49	2.90	2.50	3.34	2.76	3.55	2.80	3.61	2.75	3.74	2.89	3.86	2.82
	39	2.66	2.49	2.89	2.49	3.32	2.75	3.53	2.79	3.58	2.74	3.67	2.86	3.78	2.79
	41	2.66	2.49	2.88	2.49	3.22	2.71	3.38	2.72	3.43	2.69	3.51	2.81	3.60	2.73
	43	2.66	2.49	2.87	2.49	3.12	2.67	3.24	2.67	3.28	2.63	3.35	2.75	3.42	2.67

Air flow	Ambient air temp. DB	Ambient air temp. WB	Indoor air temp. 16 ℃CDB	18 ℃CDB	20 ℃CDB	22 ℃CDB	24 ℃CDB
	-19.8	-20	2.32	2.32	2.32	2.32	2.32
	-17.8	-18	2.47	2.47	2.47	2.47	2.47
	-15.7	-16	2.62	2.62	2.62	2.62	2.62
	-13.7	-14	2.77	2.77	2.77	2.77	2.77
	-11.7	-12	2.92	2.92	2.92	2.92	2.92
Hi	-9.6	-10	3.07	3.07	3.07	3.07	3.07
	-7.5	-8	3.25	3.25	3.25	3.25	3.25
10	-5.5	-6	3.44	3.44	3.44	3.44	3.44
(m^3/min)	-3.4	-4	3.56	3.56	3.55	3.52	3.48
	-1.3	-2	3.68	3.67	3.66	3.59	3.52
	0.8	0	3.88	3.83	3.77	3.64	3.50
	3.9	3	4.21	4.06	3.91	3.69	3.47
	7.0	6	4.60	4.30	4.00	3.72	3.44
	10.1	9	4.57	4.28	3.99	3.70	3.41
	13.2	12	4.54	4.25	3.96	3.67	3.38
	16.9	15.5	4.51	4.22	3.93	3.64	3.35

Air flow	Ambient air temp. (℃DB)	Indoor air temperature 21 ℃CDB 14 ℃CWB TC	21 ℃CDB 14 ℃CWB SHC	23 ℃CDB 16 ℃CWB TC	23 ℃CDB 16 ℃CWB SHC	26 ℃CDB 18 ℃CWB TC	26 ℃CDB 18 ℃CWB SHC	27 ℃CDB 19 ℃CWB TC	27 ℃CDB 19 ℃CWB SHC	28 ℃CDB 20 ℃CWB TC	28 ℃CDB 20 ℃CWB SHC	31 ℃CDB 22 ℃CWB TC	31 ℃CDB 22 ℃CWB SHC	33 ℃CDB 24 ℃CWB TC	33 ℃CDB 24 ℃CWB SHC
	10			2.74	2.31	3.27	2.60	3.54	2.66	3.77	2.70	4.22	2.91	4.38	2.84
	12			2.74	2.31	3.27	2.60	3.54	2.66	3.76	2.69	4.20	2.90	4.36	2.83
	14			2.74	2.31	3.27	2.60	3.54	2.66	3.76	2.69	4.19	2.90	4.34	2.82
	16			2.74	2.31	3.27	2.60	3.54	2.66	3.75	2.69	4.17	2.89	4.32	2.82
	18			2.74	2.31	3.27	2.60	3.54	2.66	3.75	2.69	4.16	2.89	4.31	2.81
Me	20			2.74	2.31	3.27	2.60	3.54	2.66	3.74	2.68	4.14	2.88	4.29	2.81
	22			2.73	2.30	3.27	2.60	3.54	2.66	3.72	2.68	4.09	2.86	4.23	2.79
9	24			2.73	2.30	3.27	2.60	3.54	2.66	3.71	2.67	4.04	2.84	4.17	2.77
(m^3/min)	26			2.73	2.30	3.26	2.60	3.51	2.65	3.66	2.65	3.97	2.82	4.11	2.75
	28	2.47	2.27	2.73	2.30	3.24	2.59	3.47	2.63	3.62	2.63	3.91	2.80	4.04	2.72
	30	2.47	2.27	2.72	2.30	3.21	2.58	3.44	2.62	3.58	2.62	3.85	2.77	3.98	2.70
	32	2.47	2.27	2.71	2.30	3.19	2.57	3.41	2.61	3.54	2.60	3.79	2.75	3.92	2.68
	34	2.47	2.27	2.70	2.29	3.18	2.56	3.36	2.59	3.48	2.58	3.71	2.72	3.84	2.65
	35	2.47	2.27	2.70	2.29	3.17	2.56	3.34	2.57	3.45	2.57	3.67	2.71	3.80	2.64
	36	2.47	2.27	2.70	2.29	3.15	2.55	3.32	2.57	3.42	2.56	3.61	2.69	3.73	2.62
	38	2.47	2.27	2.69	2.28	3.10	2.53	3.29	2.56	3.35	2.53	3.47	2.64	3.58	2.57
	39	2.47	2.27	2.69	2.28	3.08	2.52	3.27	2.55	3.32	2.51	3.41	2.61	3.50	2.54
	41	2.47	2.27	2.68	2.28	2.99	2.48	3.14	2.49	3.18	2.45	3.26	2.56	3.34	2.49
	43	2.47	2.27	2.67	2.27	2.89	2.44	3.01	2.44	3.04	2.40	3.11	2.51	3.18	2.44

Air flow	Ambient air temp. DB	Ambient air temp. WB	Indoor air temp. 16 ℃CDB	18 ℃CDB	20 ℃CDB	22 ℃CDB	24 ℃CDB
	-19.8	-20	2.13	2.13	2.13	2.13	2.13
	-17.8	-18	2.27	2.27	2.27	2.27	2.27
	-15.7	-16	2.40	2.40	2.40	2.40	2.40
	-13.7	-14	2.54	2.54	2.54	2.54	2.54
	-11.7	-12	2.68	2.68	2.68	2.68	2.68
Me	-9.6	-10	2.81	2.81	2.81	2.81	2.81
	-7.5	-8	2.98	2.98	2.98	2.98	2.98
9	-5.5	-6	3.16	3.16	3.16	3.16	3.16
(m^3/min)	-3.4	-4	3.27	3.26	3.26	3.23	3.19
	-1.3	-2	3.38	3.37	3.36	3.29	3.23
	0.8	0	3.56	3.51	3.46	3.34	3.21
	3.9	3	3.86	3.73	3.59	3.39	3.18
	7.0	6	4.22	3.95	3.67	3.41	3.16
	10.1	9	4.19	3.92	3.66	3.39	3.13
	13.2	12	4.17	3.90	3.63	3.37	3.10
	16.9	15.5	4.13	3.87	3.60	3.34	3.07

Air flow	Ambient air temp. (℃DB)	Indoor air temperature 21 ℃CDB 14 ℃CWB TC	21 ℃CDB 14 ℃CWB SHC	23 ℃CDB 16 ℃CWB TC	23 ℃CDB 16 ℃CWB SHC	26 ℃CDB 18 ℃CWB TC	26 ℃CDB 18 ℃CWB SHC	27 ℃CDB 19 ℃CWB TC	27 ℃CDB 19 ℃CWB SHC	28 ℃CDB 20 ℃CWB TC	28 ℃CDB 20 ℃CWB SHC	31 ℃CDB 22 ℃CWB TC	31 ℃CDB 22 ℃CWB SHC	33 ℃CDB 24 ℃CWB TC	33 ℃CDB 24 ℃CWB SHC
	10			2.51	2.08	3.00	2.35	3.24	2.40	3.45	2.43	3.87	2.63	4.01	2.56
	12			2.51	2.08	3.00	2.35	3.24	2.40	3.45	2.43	3.85	2.62	4.00	2.56
	14			2.51	2.08	3.00	2.35	3.24	2.40	3.44	2.43	3.84	2.62	3.98	2.55
	16			2.51	2.08	3.00	2.35	3.24	2.40	3.44	2.43	3.82	2.61	3.96	2.54
	18			2.51	2.08	3.00	2.35	3.24	2.40	3.43	2.43	3.81	2.61	3.94	2.54
Lo	20			2.51	2.08	3.00	2.35	3.24	2.40	3.43	2.43	3.80	2.60	3.93	2.53
	22			2.50	2.08	3.00	2.35	3.24	2.40	3.41	2.42	3.75	2.58	3.87	2.51
8	24			2.50	2.08	3.00	2.35	3.24	2.40	3.40	2.41	3.70	2.57	3.82	2.50
(m^3/min)	26			2.50	2.08	2.98	2.35	3.21	2.39	3.36	2.40	3.64	2.54	3.76	2.48
	28	2.26	2.05	2.50	2.08	2.97	2.34	3.18	2.38	3.32	2.38	3.58	2.52	3.70	2.46
	30	2.26	2.05	2.49	2.07	2.95	2.33	3.15	2.36	3.28	2.36	3.53	2.50	3.65	2.44
	32	2.26	2.05	2.48	2.07	2.92	2.32	3.12	2.35	3.24	2.35	3.47	2.48	3.59	2.42
	34	2.26	2.05	2.48	2.07	2.91	2.32	3.08	2.34	3.19	2.33	3.40	2.45	3.52	2.39
	35	2.26	2.05	2.47	2.07	2.91	2.32	3.06	2.33	3.16	2.32	3.36	2.44	3.48	2.38
	36	2.26	2.05	2.47	2.07	2.89	2.31	3.04	2.32	3.13	2.31	3.30	2.42	3.41	2.36
	38	2.26	2.05	2.46	2.06	2.84	2.28	3.01	2.31	3.07	2.28	3.18	2.38	3.28	2.32
	39	2.26	2.05	2.46	2.06	2.82	2.28	3.00	2.31	3.04	2.27	3.12	2.36	3.21	2.29
	41	2.26	2.05	2.45	2.06	2.73	2.24	2.88	2.25	2.91	2.22	2.98	2.30	3.06	2.24
	43	2.26	2.05	2.44	2.05	2.65	2.20	2.75	2.20	2.78	2.16	2.84	2.26	2.91	2.20

Air flow	Ambient air temp. DB	Ambient air temp. WB	Indoor air temp. 16 ℃CDB	18 ℃CDB	20 ℃CDB	22 ℃CDB	24 ℃CDB
	-19.8	-20	1.93	1.93	1.93	1.93	1.93
	-17.8	-18	2.06	2.06	2.06	2.06	2.06
	-15.7	-16	2.18	2.18	2.18	2.18	2.18
	-13.7	-14	2.30	2.30	2.30	2.30	2.30
	-11.7	-12	2.43	2.43	2.43	2.43	2.43
Lo	-9.6	-10	2.55	2.55	2.55	2.55	2.55
	-7.5	-8	2.71	2.71	2.71	2.71	2.71
8	-5.5	-6	2.86	2.86	2.86	2.86	2.86
(m^3/min)	-3.4	-4	2.96	2.96	2.96	2.93	2.90
	-1.3	-2	3.06	3.06	3.05	2.99	2.93
	0.8	0	3.23	3.18	3.14	3.03	2.91
	3.9	3	3.50	3.38	3.26	3.07	2.89
	7.0	6	3.83	3.58	3.33	3.10	2.86
	10.1	9	3.80	3.56	3.32	3.08	2.84
	13.2	12	3.78	3.54	3.30	3.06	2.81
	16.9	15.5	3.75	3.51	3.27	3.03	2.78

Note(1) This data shows average statuses out of those possible to occur in the system control.
(Depending on controls, there may be ranges where the operation is not conducted continuously.)
(2) Symbols are as follows
TC :Total cooling capacity(kW)
SHC :Sensible heat capacity(kW)

Cool mode	Uhi	Hi	Me	Lo
Air flow	12.00	10	9	8
TC	4.07	3.60	3.34	3.06
SHF	0.80	0.78	0.77	0.76

Heat mode	Uhi	Hi	Me	Lo
Air flow	12	10	9	8
Heating capacity	4.62	4.00	3.67	3.33

Model **FDT28KXE6** Cool Mode

Air flow	Ambient air temp. (℃DB)	Indoor air temperature 21 ℃DB 14 ℃WB TC	21 ℃DB 14 ℃WB SHC	23 ℃DB 16 ℃WB TC	23 ℃DB 16 ℃WB SHC	26 ℃DB 18 ℃WB TC	26 ℃DB 18 ℃WB SHC	27 ℃DB 19 ℃WB TC	27 ℃DB 19 ℃WB SHC	28 ℃DB 20 ℃WB TC	28 ℃DB 20 ℃WB SHC	31 ℃DB 22 ℃WB TC	31 ℃DB 22 ℃WB SHC	33 ℃DB 24 ℃WB TC	33 ℃DB 24 ℃WB SHC
Uhi	10			2.52	2.42	3.02	2.90	3.26	3.08	3.47	3.11	3.89	3.35	4.04	3.29
	12			2.52	2.42	3.02	2.90	3.26	3.08	3.47	3.11	3.88	3.35	4.02	3.29
	14			2.52	2.42	3.02	2.90	3.26	3.08	3.46	3.11	3.86	3.34	4.01	3.28
	16			2.52	2.42	3.02	2.90	3.26	3.08	3.46	3.11	3.85	3.34	3.99	3.28
	18			2.52	2.42	3.02	2.90	3.26	3.08	3.45	3.10	3.83	3.33	3.97	3.27
	20			2.52	2.42	3.02	2.90	3.26	3.08	3.45	3.10	3.82	3.33	3.95	3.27
	22			2.52	2.42	3.02	2.90	3.26	3.08	3.43	3.10	3.77	3.32	3.90	3.26
20	24			2.52	2.42	3.02	2.90	3.26	3.08	3.42	3.09	3.72	3.31	3.85	3.25
(m^3/min)	26			2.52	2.42	3.00	2.88	3.23	3.07	3.38	3.07	3.67	3.29	3.79	3.23
	28	2.28	2.19	2.51	2.41	2.99	2.87	3.20	3.06	3.34	3.06	3.61	3.28	3.73	3.22
	30	2.28	2.19	2.51	2.41	2.96	2.84	3.17	3.04	3.30	3.05	3.55	3.26	3.67	3.21
	32	2.28	2.19	2.50	2.40	2.94	2.82	3.14	3.01	3.26	3.02	3.50	3.25	3.62	3.18
	34	2.28	2.19	2.49	2.39	2.93	2.81	3.10	2.98	3.21	3.01	3.42	3.22	3.54	3.16
	35	2.28	2.19	2.49	2.39	2.93	2.81	3.08	3.02	3.18	3.00	3.39	3.21	3.50	3.15
	36	2.28	2.19	2.49	2.39	2.90	2.78	3.06	2.94	3.15	3.00	3.32	3.19	3.44	3.13
	38	2.28	2.19	2.48	2.38	2.86	2.75	3.03	2.91	3.09	2.97	3.20	3.07	3.30	3.09
	39	2.28	2.19	2.48	2.38	2.84	2.73	3.02	2.90	3.06	2.94	3.14	3.01	3.23	3.06
	41	2.28	2.19	2.47	2.37	2.75	2.64	2.90	2.78	2.93	2.81	3.00	2.88	3.08	2.96
	43	2.28	2.19	2.46	2.36	2.67	2.56	2.77	2.66	2.80	2.69	2.86	2.75	2.93	2.81

Heat Mode

Air flow	Ambient air temp. DB	Ambient air temp. WB	Indoor air temp. 16 ℃CDB	18 ℃CDB	20 ℃CDB	22 ℃CDB	24 ℃CDB
Uhi	-19.8	-20	2.04	2.04	2.04	2.04	2.04
	-17.8	-18	2.17	2.17	2.17	2.17	2.17
	-15.7	-16	2.30	2.30	2.30	2.30	2.30
	-13.7	-14	2.44	2.44	2.44	2.44	2.44
	-11.7	-12	2.57	2.57	2.57	2.57	2.57
	-9.6	-10	2.70	2.70	2.70	2.70	2.70
	-7.5	-8	2.86	2.86	2.86	2.86	2.86
20	-5.5	-6	3.03	3.03	3.03	3.03	3.03
(m^3/min)	-3.4	-4	3.13	3.13	3.12	3.09	3.06
	-1.3	-2	3.24	3.23	3.22	3.16	3.10
	0.8	0	3.41	3.37	3.32	3.20	3.08
	3.9	3	3.70	3.57	3.44	3.25	3.05
	7.0	6	4.05	3.78	3.52	3.27	3.03
	10.1	9	4.02	3.76	3.51	3.25	3.00
	13.2	12	4.00	3.74	3.48	3.23	2.97
	16.9	15.5	3.96	3.71	3.45	3.20	2.94

Air flow	Ambient air temp. (℃DB)	Indoor air temperature 21 ℃DB 14 ℃WB TC	21 ℃DB 14 ℃WB SHC	23 ℃DB 16 ℃WB TC	23 ℃DB 16 ℃WB SHC	26 ℃DB 18 ℃WB TC	26 ℃DB 18 ℃WB SHC	27 ℃DB 19 ℃WB TC	27 ℃DB 19 ℃WB SHC	28 ℃DB 20 ℃WB TC	28 ℃DB 20 ℃WB SHC	31 ℃DB 22 ℃WB TC	31 ℃DB 22 ℃WB SHC	33 ℃DB 24 ℃WB TC	33 ℃DB 24 ℃WB SHC
Hi	10			2.30	2.21	2.74	2.63	2.97	2.82	3.16	2.84	3.54	3.07	3.67	3.02
	12			2.30	2.21	2.74	2.63	2.97	2.82	3.15	2.84	3.52	3.07	3.66	3.01
	14			2.30	2.21	2.74	2.63	2.97	2.82	3.15	2.84	3.51	3.06	3.64	3.01
	16			2.30	2.21	2.74	2.63	2.97	2.82	3.14	2.82	3.50	3.06	3.63	3.01
	18			2.30	2.21	2.74	2.63	2.97	2.82	3.14	2.82	3.49	3.06	3.61	3.00
	20			2.30	2.21	2.74	2.63	2.97	2.82	3.14	2.82	3.47	3.05	3.59	3.00
	22			2.29	2.20	2.74	2.63	2.97	2.82	3.12	2.82	3.43	3.04	3.54	2.99
18	24			2.29	2.20	2.74	2.63	2.97	2.82	3.11	2.82	3.39	3.03	3.50	2.98
(m^3/min)	26			2.29	2.20	2.73	2.62	2.94	2.81	3.07	2.80	3.33	3.02	3.44	2.95
	28	2.07	1.99	2.28	2.19	2.72	2.61	2.91	2.79	3.03	2.79	3.28	2.99	3.39	2.94
	30	2.07	1.99	2.28	2.19	2.70	2.59	2.88	2.76	3.00	2.78	3.23	2.98	3.34	2.93
	32	2.07	1.99	2.27	2.18	2.67	2.56	2.86	2.75	2.96	2.76	3.18	2.97	3.29	2.91
	34	2.07	1.99	2.27	2.18	2.66	2.55	2.82	2.71	2.92	2.75	3.11	2.94	3.22	2.89
	35	2.07	1.99	2.26	2.17	2.66	2.55	2.80	2.74	2.89	2.74	3.08	2.93	3.18	2.88
	36	2.07	1.99	2.26	2.17	2.64	2.53	2.79	2.68	2.86	2.73	3.02	2.90	3.12	2.85
	38	2.07	1.99	2.25	2.16	2.60	2.50	2.76	2.65	2.81	2.70	2.91	2.79	3.00	2.83
	39	2.07	1.99	2.25	2.16	2.58	2.48	2.74	2.63	2.78	2.67	2.86	2.75	2.94	2.80
	41	2.07	1.99	2.24	2.15	2.50	2.40	2.63	2.52	2.66	2.55	2.73	2.62	2.80	2.69
	43	2.07	1.99	2.24	2.15	2.43	2.33	2.52	2.42	2.55	2.45	2.60	2.50	2.66	2.55

Air flow	Ambient air temp. DB	Ambient air temp. WB	Indoor air temp. 16 ℃CDB	18 ℃CDB	20 ℃CDB	22 ℃CDB	24 ℃CDB
Hi	-19.8	-20	1.86	1.86	1.86	1.86	1.86
	-17.8	-18	1.98	1.98	1.98	1.98	1.98
	-15.7	-16	2.09	2.09	2.09	2.09	2.09
	-13.7	-14	2.21	2.21	2.21	2.21	2.21
	-11.7	-12	2.33	2.33	2.33	2.33	2.33
	-9.6	-10	2.45	2.45	2.45	2.45	2.45
	-7.5	-8	2.60	2.60	2.60	2.60	2.60
18	-5.5	-6	2.75	2.75	2.75	2.75	2.75
(m^3/min)	-3.4	-4	2.85	2.84	2.84	2.81	2.78
	-1.3	-2	2.94	2.94	2.93	2.87	2.82
	0.8	0	3.10	3.06	3.02	2.91	2.80
	3.9	3	3.37	3.25	3.13	2.95	2.78
	7.0	6	3.68	3.44	3.20	2.98	2.75
	10.1	9	3.66	3.42	3.19	2.96	2.73
	13.2	12	3.63	3.40	3.17	2.94	2.70
	16.9	15.5	3.60	3.37	3.14	2.91	2.68

Air flow	Ambient air temp. (℃DB)	Indoor air temperature 21 ℃DB 14 ℃WB TC	21 ℃DB 14 ℃WB SHC	23 ℃DB 16 ℃WB TC	23 ℃DB 16 ℃WB SHC	26 ℃DB 18 ℃WB TC	26 ℃DB 18 ℃WB SHC	27 ℃DB 19 ℃WB TC	27 ℃DB 19 ℃WB SHC	28 ℃DB 20 ℃WB TC	28 ℃DB 20 ℃WB SHC	31 ℃DB 22 ℃WB TC	31 ℃DB 22 ℃WB SHC	33 ℃DB 24 ℃WB TC	33 ℃DB 24 ℃WB SHC
Me	10			2.18	2.09	2.61	2.51	2.82	2.60	3.00	2.62	3.36	2.83	3.49	2.78
	12			2.18	2.09	2.61	2.51	2.82	2.60	3.00	2.62	3.35	2.83	3.47	2.77
	14			2.18	2.09	2.61	2.51	2.82	2.60	2.99	2.62	3.34	2.82	3.46	2.77
	16			2.18	2.09	2.61	2.51	2.82	2.60	2.99	2.62	3.32	2.82	3.44	2.77
	18			2.18	2.09	2.61	2.51	2.82	2.60	2.98	2.61	3.31	2.82	3.43	2.76
	20			2.18	2.09	2.61	2.51	2.82	2.60	2.98	2.61	3.30	2.81	3.41	2.76
	22			2.18	2.09	2.61	2.51	2.82	2.60	2.97	2.60	3.26	2.80	3.37	2.75
16	24			2.17	2.08	2.60	2.50	2.82	2.60	2.95	2.59	3.22	2.79	3.32	2.74
(m^3/min)	26			2.17	2.08	2.59	2.49	2.79	2.59	2.92	2.59	3.17	2.78	3.27	2.72
	28	1.97	1.89	2.17	2.08	2.58	2.48	2.77	2.57	2.88	2.57	3.11	2.75	3.22	2.70
	30	1.97	1.89	2.17	2.08	2.56	2.46	2.74	2.56	2.85	2.57	3.07	2.74	3.17	2.68
	32	1.97	1.89	2.16	2.07	2.54	2.44	2.71	2.55	2.82	2.55	3.02	2.73	3.12	2.67
	34	1.97	1.89	2.15	2.06	2.53	2.43	2.68	2.54	2.77	2.53	2.96	2.70	3.06	2.66
	35	1.97	1.89	2.15	2.06	2.53	2.43	2.66	2.53	2.75	2.53	2.92	2.69	3.03	2.65
	36	1.97	1.89	2.15	2.06	2.51	2.41	2.65	2.53	2.72	2.52	2.87	2.68	2.97	2.63
	38	1.97	1.89	2.14	2.05	2.47	2.37	2.62	2.52	2.67	2.50	2.77	2.65	2.85	2.58
	39	1.97	1.89	2.14	2.05	2.45	2.35	2.61	2.51	2.64	2.49	2.71	2.60	2.79	2.57
	41	1.97	1.89	2.13	2.04	2.38	2.28	2.50	2.40	2.53	2.43	2.59	2.49	2.66	2.53
	43	1.97	1.89	2.12	2.04	2.30	2.21	2.39	2.29	2.42	2.32	2.47	2.37	2.53	2.43

Air flow	Ambient air temp. DB	Ambient air temp. WB	Indoor air temp. 16 ℃CDB	18 ℃CDB	20 ℃CDB	22 ℃CDB	24 ℃CDB
Me	-19.8	-20	1.76	1.76	1.76	1.76	1.76
	-17.8	-18	1.88	1.88	1.88	1.88	1.88
	-15.7	-16	1.99	1.99	1.99	1.99	1.99
	-13.7	-14	2.10	2.10	2.10	2.10	2.10
	-11.7	-12	2.22	2.22	2.22	2.22	2.22
	-9.6	-10	2.33	2.33	2.33	2.33	2.33
	-7.5	-8	2.47	2.47	2.47	2.47	2.47
16	-5.5	-6	2.61	2.61	2.61	2.61	2.61
(m^3/min)	-3.4	-4	2.71	2.70	2.70	2.67	2.64
	-1.3	-2	2.80	2.79	2.78	2.73	2.68
	0.8	0	2.95	2.91	2.87	2.76	2.66
	3.9	3	3.20	3.09	2.97	2.80	2.64
	7.0	6	3.50	3.27	3.04	2.83	2.61
	10.1	9	3.47	3.25	3.03	2.81	2.59
	13.2	12	3.45	3.23	3.01	2.79	2.57
	16.9	15.5	3.42	3.20	2.98	2.76	2.54

Air flow	Ambient air temp. (℃DB)	Indoor air temperature 21 ℃DB 14 ℃WB TC	21 ℃DB 14 ℃WB SHC	23 ℃DB 16 ℃WB TC	23 ℃DB 16 ℃WB SHC	26 ℃DB 18 ℃WB TC	26 ℃DB 18 ℃WB SHC	27 ℃DB 19 ℃WB TC	27 ℃DB 19 ℃WB SHC	28 ℃DB 20 ℃WB TC	28 ℃DB 20 ℃WB SHC	31 ℃DB 22 ℃WB TC	31 ℃DB 22 ℃WB SHC	33 ℃DB 24 ℃WB TC	33 ℃DB 24 ℃WB SHC
Lo	10			2.07	1.99	2.47	2.34	2.67	2.39	2.84	2.41	3.18	2.61	3.31	2.57
	12			2.07	1.99	2.47	2.34	2.67	2.39	2.84	2.41	3.17	2.61	3.29	2.56
	14			2.07	1.99	2.47	2.34	2.67	2.39	2.83	2.41	3.16	2.61	3.28	2.56
	16			2.07	1.99	2.47	2.34	2.67	2.39	2.83	2.41	3.15	2.60	3.26	2.55
	18			2.07	1.99	2.47	2.34	2.67	2.39	2.83	2.41	3.14	2.60	3.25	2.55
	20			2.07	1.99	2.47	2.34	2.67	2.39	2.82	2.41	3.13	2.60	3.23	2.54
	22			2.06	1.98	2.47	2.34	2.67	2.39	2.81	2.39	3.09	2.59	3.19	2.53
14	24			2.06	1.98	2.47	2.34	2.67	2.39	2.80	2.39	3.05	2.57	3.15	2.52
(m^3/min)	26			2.06	1.98	2.46	2.34	2.65	2.38	2.76	2.38	3.00	2.56	3.10	2.50
	28	1.86	1.79	2.06	1.98	2.44	2.33	2.62	2.35	2.73	2.37	2.95	2.53	3.05	2.49
	30	1.86	1.79	2.05	1.97	2.43	2.33	2.60	2.34	2.70	2.34	2.91	2.52	3.00	2.46
	32	1.86	1.79	2.05	1.97	2.41	2.31	2.57	2.34	2.67	2.33	2.86	2.51	2.96	2.46
	34	1.86	1.79	2.04	1.96	2.40	2.30	2.54	2.33	2.62	2.31	2.80	2.49	2.90	2.44
	35	1.86	1.79	2.04	1.96	2.39	2.29	2.52	2.32	2.60	2.31	2.77	2.48	2.87	2.43
	36	1.86	1.79	2.03	1.95	2.38	2.28	2.51	2.32	2.58	2.30	2.72	2.46	2.81	2.41
	38	1.86	1.79	2.03	1.95	2.34	2.25	2.48	2.31	2.53	2.29	2.62	2.43	2.70	2.38
	39	1.86	1.79	2.03	1.95	2.32	2.23	2.47	2.31	2.50	2.28	2.57	2.41	2.64	2.36
	41	1.86	1.79	2.02	1.94	2.25	2.16	2.37	2.27	2.40	2.25	2.46	2.36	2.52	2.32
	43	1.86	1.79	2.01	1.93	2.18	2.09	2.27	2.18	2.29	2.20	2.34	2.25	2.40	2.29

Air flow	Ambient air temp. DB	Ambient air temp. WB	Indoor air temp. 16 ℃CDB	18 ℃CDB	20 ℃CDB	22 ℃CDB	24 ℃CDB
Lo	-19.8	-20	1.67	1.67	1.67	1.67	1.67
	-17.8	-18	1.78	1.78	1.78	1.78	1.78
	-15.7	-16	1.89	1.89	1.89	1.89	1.89
	-13.7	-14	1.99	1.99	1.99	1.99	1.99
	-11.7	-12	2.10	2.10	2.10	2.10	2.10
	-9.6	-10	2.21	2.21	2.21	2.21	2.21
	-7.5	-8	2.34	2.34	2.34	2.34	2.34
14	-5.5	-6	2.48	2.48	2.48	2.48	2.48
(m^3/min)	-3.4	-4	2.56	2.56	2.56	2.53	2.51
	-1.3	-2	2.65	2.64	2.64	2.58	2.53
	0.8	0	2.79	2.75	2.71	2.62	2.52
	3.9	3	3.03	2.92	2.82	2.66	2.50
	7.0	6	3.31	3.10	2.88	2.68	2.48
	10.1	9	3.29	3.08	2.87	2.66	2.46
	13.2	12	3.27	3.06	2.85	2.64	2.43
	16.9	15.5	3.24	3.03	2.83	2.62	2.41

Note(1) This data shows average statuses out of those possible to occur in the system control.
(Depending on controls, there may be ranges where the operation is not conducted continuously.)
(2) Symbols are as follows
TC :Total cooling capacity(kW)
SHC :Sensible heat capacity(kW)

Cool mode	Uhi	Hi	Me	Lo
Air flow	20.00	18	16	14
TC	3.08	2.80	2.66	2.52
SHF	0.98	0.98	0.95	0.92

Heat mode	Uhi	Hi	Me	Lo
Air flow	20	18	16	14
Heating capacity	3.52	3.20	3.04	2.88

Model **FDT36KXE6** Cool Mode

Air flow	Ambient air temp. (°CDB)	Indoor air temperature 21 °CDB 14 °CWB TC	21 °CDB 14 °CWB SHC	23 °CDB 16 °CWB TC	23 °CDB 16 °CWB SHC	26 °CDB 18 °CWB TC	26 °CDB 18 °CWB SHC	27 °CDB 19 °CWB TC	27 °CDB 19 °CWB SHC	28 °CDB 20 °CWB TC	28 °CDB 20 °CWB SHC	31 °CDB 22 °CWB TC	31 °CDB 22 °CWB SHC	33 °CDB 24 °CWB TC	33 °CDB 24 °CWB SHC
Uhi	10			3.21	3.08	3.84	3.69	4.16	3.87	4.42	3.90	4.95	4.24	5.14	4.16
	12			3.21	3.08	3.84	3.69	4.16	3.87	4.41	3.90	4.93	4.23	5.12	4.16
	14			3.21	3.08	3.84	3.69	4.16	3.87	4.41	3.90	4.92	4.23	5.10	4.15
	16			3.21	3.08	3.84	3.69	4.16	3.87	4.40	3.90	4.90	4.22	5.08	4.15
	18			3.21	3.08	3.84	3.69	4.16	3.87	4.40	3.90	4.88	4.22	5.05	4.13
	20			3.21	3.08	3.84	3.69	4.16	3.87	4.39	3.89	4.86	4.21	5.03	4.12
	22			3.21	3.08	3.84	3.69	4.16	3.87	4.37	3.89	4.80	4.20	4.96	4.10
20	24			3.20	3.07	3.84	3.69	4.16	3.87	4.35	3.88	4.74	4.17	4.89	4.08
(m^3/min)	26			3.20	3.07	3.82	3.67	4.12	3.86	4.30	3.85	4.66	4.14	4.82	4.07
	28	2.90	2.78	3.20	3.07	3.80	3.65	4.08	3.84	4.25	3.84	4.59	4.12	4.74	4.03
	30	2.90	2.78	3.19	3.06	3.77	3.62	4.04	3.83	4.20	3.82	4.52	4.09	4.67	4.01
	32	2.90	2.78	3.18	3.05	3.74	3.59	4.00	3.81	4.15	3.81	4.45	4.07	4.60	3.96
	34	2.90	2.78	3.17	3.04	3.73	3.58	3.95	3.79	4.08	3.77	4.36	4.01	4.51	3.93
	35	2.90	2.78	3.17	3.04	3.72	3.57	3.92	3.76	4.05	3.77	4.31	4.00	4.46	3.92
	36	2.90	2.78	3.16	3.03	3.70	3.55	3.90	3.74	4.01	3.75	4.23	3.97	4.37	3.90
	38	2.90	2.78	3.16	3.03	3.64	3.49	3.86	3.71	3.93	3.73	4.08	3.92	4.20	3.85
	39	2.90	2.78	3.15	3.02	3.61	3.47	3.84	3.69	3.89	3.72	4.00	3.84	4.11	3.83
	41	2.90	2.78	3.14	3.01	3.50	3.36	3.68	3.53	3.73	3.58	3.82	3.67	3.92	3.76
	43	2.90	2.78	3.13	3.00	3.40	3.26	3.53	3.39	3.57	3.43	3.64	3.49	3.73	3.58

Heat Mode

Air flow	Ambient air temp. DB	Ambient air temp. WB	Indoor air temp. 16 °CDB	18 °CDB	20 °CDB	22 °CDB	24 °CDB
Uhi	-19.8	-20	2.53	2.53	2.53	2.53	2.53
	-17.8	-18	2.69	2.69	2.69	2.69	2.69
	-15.7	-16	2.85	2.85	2.85	2.85	2.85
	-13.7	-14	3.02	3.02	3.02	3.02	3.02
	-11.7	-12	3.18	3.18	3.18	3.18	3.18
	-9.6	-10	3.34	3.34	3.34	3.34	3.34
	-7.5	-8	3.55	3.55	3.55	3.55	3.55
20	-5.5	-6	3.75	3.75	3.75	3.75	3.75
(m^3/min)	-3.4	-4	3.88	3.87	3.87	3.83	3.79
	-1.3	-2	4.01	4.00	3.99	3.91	3.84
	0.8	0	4.23	4.17	4.11	3.96	3.82
	3.9	3	4.59	4.43	4.26	4.02	3.78
	7.0	6	5.01	4.69	4.36	4.05	3.75
	10.1	9	4.98	4.66	4.34	4.03	3.72
	13.2	12	4.95	4.63	4.32	4.00	3.68
	16.9	15.5	4.91	4.59	4.28	3.96	3.65

Air flow	Ambient air temp. (°CDB)	Indoor air temperature 21 °CDB 14 °CWB TC	21 °CDB 14 °CWB SHC	23 °CDB 16 °CWB TC	23 °CDB 16 °CWB SHC	26 °CDB 18 °CWB TC	26 °CDB 18 °CWB SHC	27 °CDB 19 °CWB TC	27 °CDB 19 °CWB SHC	28 °CDB 20 °CWB TC	28 °CDB 20 °CWB SHC	31 °CDB 22 °CWB TC	31 °CDB 22 °CWB SHC	33 °CDB 24 °CWB TC	33 °CDB 24 °CWB SHC
Hi	10			2.95	2.83	3.53	3.39	3.82	3.54	4.06	3.57	4.55	3.88	4.72	3.81
	12			2.95	2.83	3.53	3.39	3.82	3.54	4.05	3.57	4.53	3.87	4.70	3.80
	14			2.95	2.83	3.53	3.39	3.82	3.54	4.05	3.57	4.51	3.87	4.68	3.78
	16			2.95	2.83	3.53	3.39	3.82	3.54	4.04	3.56	4.50	3.86	4.66	3.78
	18			2.95	2.83	3.53	3.39	3.82	3.54	4.04	3.56	4.48	3.86	4.64	3.77
	20			2.95	2.83	3.53	3.39	3.82	3.54	4.03	3.56	4.47	3.86	4.62	3.77
	22			2.95	2.83	3.53	3.39	3.82	3.54	4.01	3.56	4.41	3.83	4.56	3.75
18	24			2.94	2.82	3.52	3.38	3.82	3.54	3.99	3.54	4.35	3.81	4.49	3.70
(m^3/min)	26			2.94	2.82	3.51	3.37	3.78	3.53	3.95	3.53	4.28	3.79	4.43	3.68
	28	2.66	2.55	2.94	2.82	3.49	3.35	3.74	3.51	3.90	3.51	4.22	3.74	4.36	3.67
	30	2.66	2.55	2.93	2.81	3.47	3.33	3.71	3.50	3.86	3.50	4.15	3.72	4.29	3.65
	32	2.66	2.55	2.92	2.80	3.44	3.30	3.67	3.48	3.81	3.48	4.09	3.70	4.23	3.63
	34	2.66	2.55	2.91	2.79	3.43	3.29	3.62	3.46	3.75	3.45	4.00	3.68	4.14	3.61
	35	2.66	2.55	2.91	2.79	3.42	3.28	3.60	3.46	3.72	3.44	3.96	3.67	4.09	3.60
	36	2.66	2.55	2.91	2.79	3.39	3.25	3.58	3.44	3.68	3.43	3.89	3.65	4.02	3.58
	38	2.66	2.55	2.90	2.78	3.34	3.21	3.55	3.41	3.61	3.41	3.74	3.59	3.86	3.53
	39	2.66	2.55	2.89	2.77	3.32	3.19	3.53	3.39	3.58	3.40	3.67	3.52	3.78	3.52
	41	2.66	2.55	2.88	2.76	3.22	3.09	3.38	3.24	3.43	3.29	3.51	3.37	3.60	3.46
	43	2.66	2.55	2.87	2.76	3.12	3.00	3.24	3.11	3.28	3.15	3.35	3.22	3.42	3.28

Air flow	Ambient air temp. DB	Ambient air temp. WB	Indoor air temp. 16 °CDB	18 °CDB	20 °CDB	22 °CDB	24 °CDB
Hi	-19.8	-20	2.32	2.32	2.32	2.32	2.32
	-17.8	-18	2.47	2.47	2.47	2.47	2.47
	-15.7	-16	2.62	2.62	2.62	2.62	2.62
	-13.7	-14	2.77	2.77	2.77	2.77	2.77
	-11.7	-12	2.92	2.92	2.92	2.92	2.92
	-9.6	-10	3.07	3.07	3.07	3.07	3.07
	-7.5	-8	3.25	3.25	3.25	3.25	3.25
18	-5.5	-6	3.44	3.44	3.44	3.44	3.44
(m^3/min)	-3.4	-4	3.56	3.56	3.55	3.52	3.48
	-1.3	-2	3.68	3.67	3.66	3.59	3.52
	0.8	0	3.88	3.83	3.77	3.64	3.50
	3.9	3	4.21	4.06	3.91	3.69	3.47
	7.0	6	4.60	4.30	4.00	3.72	3.44
	10.1	9	4.57	4.28	3.99	3.70	3.41
	13.2	12	4.54	4.25	3.96	3.67	3.38
	16.9	15.5	4.51	4.22	3.93	3.64	3.35

Air flow	Ambient air temp. (°CDB)	Indoor air temperature 21 °CDB 14 °CWB TC	21 °CDB 14 °CWB SHC	23 °CDB 16 °CWB TC	23 °CDB 16 °CWB SHC	26 °CDB 18 °CWB TC	26 °CDB 18 °CWB SHC	27 °CDB 19 °CWB TC	27 °CDB 19 °CWB SHC	28 °CDB 20 °CWB TC	28 °CDB 20 °CWB SHC	31 °CDB 22 °CWB TC	31 °CDB 22 °CWB SHC	33 °CDB 24 °CWB TC	33 °CDB 24 °CWB SHC
Me	10			2.77	2.66	3.31	3.18	3.58	3.26	3.81	3.28	4.27	3.56	4.43	3.49
	12			2.77	2.66	3.31	3.18	3.58	3.26	3.81	3.28	4.25	3.55	4.41	3.48
	14			2.77	2.66	3.31	3.18	3.58	3.26	3.80	3.27	4.24	3.55	4.40	3.48
	16			2.77	2.66	3.31	3.18	3.58	3.26	3.80	3.27	4.22	3.54	4.38	3.48
	18			2.77	2.66	3.31	3.18	3.58	3.26	3.79	3.27	4.21	3.54	4.36	3.47
	20			2.77	2.66	3.31	3.18	3.58	3.26	3.79	3.27	4.19	3.53	4.34	3.47
	22			2.77	2.66	3.31	3.18	3.58	3.26	3.77	3.26	4.14	3.52	4.28	3.45
16	24			2.76	2.65	3.31	3.18	3.58	3.26	3.75	3.26	4.09	3.51	4.22	3.43
(m^3/min)	26			2.76	2.65	3.29	3.16	3.55	3.25	3.71	3.25	4.02	3.49	4.15	3.42
	28	2.50	2.40	2.76	2.65	3.28	3.15	3.52	3.24	3.66	3.23	3.96	3.47	4.09	3.40
	30	2.50	2.40	2.75	2.64	3.25	3.12	3.48	3.22	3.62	3.22	3.90	3.45	4.03	3.38
	32	2.50	2.40	2.74	2.63	3.23	3.10	3.45	3.21	3.58	3.20	3.84	3.43	3.97	3.37
	34	2.50	2.40	2.74	2.63	3.22	3.09	3.40	3.20	3.52	3.19	3.76	3.41	3.89	3.34
	35	2.50	2.40	2.73	2.62	3.21	3.08	3.38	3.18	3.49	3.18	3.72	3.39	3.84	3.32
	36	2.50	2.40	2.73	2.62	3.19	3.06	3.36	3.18	3.46	3.17	3.65	3.37	3.77	3.30
	38	2.50	2.40	2.72	2.61	3.14	3.01	3.33	3.17	3.39	3.14	3.52	3.33	3.62	3.26
	39	2.50	2.40	2.72	2.61	3.11	2.99	3.31	3.17	3.36	3.13	3.45	3.30	3.55	3.24
	41	2.50	2.40	2.71	2.60	3.02	2.90	3.18	3.05	3.22	3.08	3.30	3.17	3.38	3.18
	43	2.50	2.40	2.70	2.59	2.93	2.81	3.04	2.92	3.08	2.96	3.14	3.01	3.21	3.08

Air flow	Ambient air temp. DB	Ambient air temp. WB	Indoor air temp. 16 °CDB	18 °CDB	20 °CDB	22 °CDB	24 °CDB
Me	-19.8	-20	2.18	2.18	2.18	2.18	2.18
	-17.8	-18	2.32	2.32	2.32	2.32	2.32
	-15.7	-16	2.46	2.46	2.46	2.46	2.46
	-13.7	-14	2.60	2.60	2.60	2.60	2.60
	-11.7	-12	2.74	2.74	2.74	2.74	2.74
	-9.6	-10	2.88	2.88	2.88	2.88	2.88
	-7.5	-8	3.06	3.06	3.06	3.06	3.06
16	-5.5	-6	3.23	3.23	3.23	3.23	3.23
(m^3/min)	-3.4	-4	3.35	3.34	3.34	3.30	3.27
	-1.3	-2	3.46	3.45	3.44	3.37	3.31
	0.8	0	3.65	3.60	3.54	3.42	3.29
	3.9	3	3.96	3.82	3.68	3.47	3.26
	7.0	6	4.32	4.04	3.76	3.50	3.23
	10.1	9	4.30	4.02	3.75	3.48	3.21
	13.2	12	4.27	4.00	3.72	3.45	3.18
	16.9	15.5	4.23	3.96	3.69	3.42	3.14

Air flow	Ambient air temp. (°CDB)	Indoor air temperature 21 °CDB 14 °CWB TC	21 °CDB 14 °CWB SHC	23 °CDB 16 °CWB TC	23 °CDB 16 °CWB SHC	26 °CDB 18 °CWB TC	26 °CDB 18 °CWB SHC	27 °CDB 19 °CWB TC	27 °CDB 19 °CWB SHC	28 °CDB 20 °CWB TC	28 °CDB 20 °CWB SHC	31 °CDB 22 °CWB TC	31 °CDB 22 °CWB SHC	33 °CDB 24 °CWB TC	33 °CDB 24 °CWB SHC
Lo	10			2.62	2.52	3.14	2.93	3.39	2.98	3.61	3.00	4.04	3.24	4.20	3.18
	12			2.62	2.52	3.14	2.93	3.39	2.98	3.60	2.99	4.03	3.24	4.18	3.17
	14			2.62	2.52	3.14	2.93	3.39	2.98	3.60	2.99	4.01	3.23	4.16	3.17
	16			2.62	2.52	3.14	2.93	3.39	2.98	3.59	2.99	4.00	3.23	4.14	3.16
	18			2.62	2.52	3.14	2.93	3.39	2.98	3.59	2.99	3.98	3.22	4.12	3.15
	20			2.62	2.52	3.14	2.93	3.39	2.98	3.58	2.99	3.97	3.22	4.11	3.15
	22			2.62	2.52	3.13	2.93	3.39	2.98	3.57	2.99	3.92	3.20	4.05	3.14
14	24			2.62	2.52	3.13	2.93	3.39	2.98	3.55	2.98	3.87	3.19	3.99	3.12
(m^3/min)	26			2.61	2.51	3.12	2.92	3.36	2.97	3.51	2.97	3.81	3.17	3.93	3.11
	28	2.37	2.28	2.61	2.51	3.10	2.92	3.33	2.96	3.47	2.95	3.75	3.15	3.87	3.09
	30	2.37	2.28	2.60	2.50	3.08	2.91	3.30	2.94	3.43	2.94	3.69	3.14	3.81	3.07
	32	2.37	2.28	2.60	2.50	3.06	2.90	3.26	2.92	3.39	2.92	3.63	3.12	3.76	3.05
	34	2.37	2.28	2.59	2.49	3.05	2.89	3.22	2.91	3.33	2.90	3.56	3.09	3.68	3.03
	35	2.37	2.28	2.59	2.49	3.04	2.89	3.20	2.88	3.31	2.89	3.52	3.08	3.64	3.02
	36	2.37	2.28	2.58	2.48	3.02	2.88	3.18	2.90	3.27	2.88	3.45	3.06	3.57	3.00
	38	2.37	2.28	2.58	2.48	2.97	2.85	3.15	2.89	3.21	2.86	3.33	3.02	3.43	2.95
	39	2.37	2.28	2.57	2.47	2.95	2.83	3.14	2.88	3.18	2.84	3.26	2.99	3.36	2.94
	41	2.37	2.28	2.56	2.46	2.86	2.75	3.01	2.83	3.05	2.80	3.12	2.95	3.20	2.88
	43	2.37	2.28	2.55	2.45	2.77	2.66	2.88	2.76	2.91	2.75	2.97	2.85	3.04	2.83

Air flow	Ambient air temp. DB	Ambient air temp. WB	Indoor air temp. 16 °CDB	18 °CDB	20 °CDB	22 °CDB	24 °CDB
Lo	-19.8	-20	2.06	2.06	2.06	2.06	2.06
	-17.8	-18	2.20	2.20	2.20	2.20	2.20
	-15.7	-16	2.33	2.33	2.33	2.33	2.33
	-13.7	-14	2.46	2.46	2.46	2.46	2.46
	-11.7	-12	2.60	2.60	2.60	2.60	2.60
	-9.6	-10	2.73	2.73	2.73	2.73	2.73
	-7.5	-8	2.90	2.90	2.90	2.90	2.90
14	-5.5	-6	3.06	3.06	3.06	3.06	3.06
(m^3/min)	-3.4	-4	3.17	3.16	3.16	3.13	3.10
	-1.3	-2	3.28	3.27	3.26	3.20	3.13
	0.8	0	3.45	3.40	3.36	3.24	3.12
	3.9	3	3.75	3.61	3.48	3.28	3.09
	7.0	6	4.09	3.83	3.56	3.31	3.06
	10.1	9	4.07	3.81	3.55	3.29	3.03
	13.2	12	4.04	3.78	3.52	3.27	3.01
	16.9	15.5	4.01	3.75	3.49	3.24	3.98

Note(1) This data shows average statuses out of those possible to occur in the system control.
(Depending on controls, there may be ranges where the operation is not conducted continuously.)
(2) Symbols are as follows
TC :Total cooling capacity(kW)
SHC :Sensible heat capacity(kW)

Cool mode	Uhi	Hi	Me	Lo
Air flow	20.00	18	16	14
TC	3.92	3.60	3.38	3.20
SHF	0.96	0.96	0.94	0.90

Heat mode	Uhi	Hi	Me	Lo
Air flow	20	18	16	14
Heating capacity	4.36	4.00	3.76	3.56

Model **FDT45KXE6** Cool Mode

Air flow	Ambient air temp. (°CDB)	Indoor air temperature 21 °CDB 14 °CWB TC	21 °CDB 14 °CWB SHC	23 °CDB 16 °CWB TC	23 °CDB 16 °CWB SHC	26 °CDB 18 °CWB TC	26 °CDB 18 °CWB SHC	27 °CDB 19 °CWB TC	27 °CDB 19 °CWB SHC	28 °CDB 20 °CWB TC	28 °CDB 20 °CWB SHC	31 °CDB 22 °CWB TC	31 °CDB 22 °CWB SHC	33 °CDB 24 °CWB TC	33 °CDB 24 °CWB SHC
	10			4.17	3.81	4.99	4.30	5.40	4.37	5.74	4.40	6.43	4.78	6.68	4.68
	12			4.17	3.81	4.99	4.30	5.40	4.37	5.73	4.40	6.41	4.77	6.65	4.67
	14			4.17	3.81	4.99	4.30	5.40	4.37	5.72	4.40	6.38	4.76	6.62	4.66
	16			4.17	3.81	4.99	4.30	5.40	4.37	5.72	4.40	6.36	4.76	6.59	4.66
	18			4.17	3.81	4.99	4.30	5.40	4.37	5.71	4.39	6.34	4.75	6.56	4.65
Uhi	20			4.17	3.81	4.99	4.30	5.40	4.37	5.70	4.39	6.31	4.74	6.53	4.64
	22			4.17	3.81	4.99	4.30	5.40	4.37	5.67	4.38	6.23	4.72	6.44	4.60
20	24			4.16	3.80	4.98	4.29	5.40	4.37	5.65	4.37	6.15	4.70	6.35	4.58
(m^3/min)	26			4.16	3.80	4.96	4.29	5.34	4.35	5.58	4.35	6.06	4.66	6.26	4.54
	28	3.77	3.62	4.15	3.80	4.94	4.28	5.29	4.34	5.52	4.33	5.96	4.62	6.16	4.52
	30	3.77	3.62	4.14	3.80	4.90	4.27	5.24	4.32	5.45	4.31	5.87	4.59	6.07	4.48
	32	3.77	3.62	4.13	3.79	4.86	4.24	5.19	4.30	5.39	4.29	5.78	4.57	5.97	4.46
	34	3.77	3.62	4.12	3.79	4.84	4.23	5.12	4.27	5.30	4.25	5.66	4.52	5.85	4.41
	35	3.77	3.62	4.11	3.78	4.84	4.23	5.09	4.28	5.26	4.24	5.60	4.50	5.79	4.40
	36	3.77	3.62	4.11	3.78	4.80	4.22	5.06	4.25	5.21	4.22	5.49	4.46	5.68	4.36
	38	3.77	3.62	4.10	3.78	4.73	4.20	5.01	4.23	5.11	4.18	5.29	4.39	5.45	4.28
	39	3.77	3.62	4.09	3.78	4.69	4.18	4.99	4.22	5.06	4.16	5.19	4.36	5.34	4.25
	41	3.77	3.62	4.08	3.77	4.55	4.12	4.78	4.13	4.84	4.08	4.96	4.28	5.09	4.18
	43	3.77	3.62	4.06	3.76	4.41	4.07	4.58	4.07	4.63	4.01	4.73	4.17	4.84	4.07

Heat Mode

Air flow	Ambient air temp. DB	Ambient air temp. WB	Indoor air temp. 16 °CDB	18 °CDB	20 °CDB	22 °CDB	24 °CDB
	-19.8	-20	3.28	3.28	3.28	3.28	3.28
	-17.8	-18	3.49	3.49	3.49	3.49	3.49
	-15.7	-16	3.70	3.70	3.70	3.70	3.70
	-13.7	-14	3.91	3.91	3.91	3.91	3.91
	-11.7	-12	4.12	4.12	4.12	4.12	4.12
Uhi	-9.6	-10	4.33	4.33	4.33	4.33	4.33
	-7.5	-8	4.60	4.60	4.60	4.60	4.60
20	-5.5	-6	4.86	4.86	4.86	4.86	4.86
(m^3/min)	-3.4	-4	5.03	5.02	5.01	4.96	4.92
	-1.3	-2	5.20	5.18	5.17	5.07	4.97
	0.8	0	5.48	5.40	5.33	5.13	4.94
	3.9	3	5.95	5.73	5.52	5.21	4.90
	7.0	6	6.50	6.07	5.65	5.25	4.86
	10.1	9	6.46	6.04	5.63	5.22	4.82
	13.2	12	6.41	6.00	5.59	5.18	4.77
	16.9	15.5	6.36	5.95	5.54	5.13	4.72

Air flow	Ambient air temp. (°CDB)	Indoor air temperature 21 °CDB 14 °CWB TC	21 °CDB 14 °CWB SHC	23 °CDB 16 °CWB TC	23 °CDB 16 °CWB SHC	26 °CDB 18 °CWB TC	26 °CDB 18 °CWB SHC	27 °CDB 19 °CWB TC	27 °CDB 19 °CWB SHC	28 °CDB 20 °CWB TC	28 °CDB 20 °CWB SHC	31 °CDB 22 °CWB TC	31 °CDB 22 °CWB SHC	33 °CDB 24 °CWB TC	33 °CDB 24 °CWB SHC
	10			3.69	3.40	4.41	3.84	4.77	3.90	5.07	3.93	5.68	4.27	5.90	4.18
	12			3.69	3.40	4.41	3.84	4.77	3.90	5.07	3.93	5.66	4.26	5.88	4.18
	14			3.69	3.40	4.41	3.84	4.77	3.90	5.06	3.93	5.64	4.26	5.85	4.16
	16			3.69	3.40	4.41	3.84	4.77	3.90	5.05	3.93	5.62	4.25	5.83	4.15
	18			3.69	3.40	4.41	3.84	4.77	3.90	5.05	3.93	5.60	4.25	5.80	4.15
Hi	20			3.69	3.40	4.41	3.84	4.77	3.90	5.04	3.92	5.58	4.24	5.78	4.14
	22			3.68	3.40	4.41	3.84	4.77	3.90	5.02	3.92	5.51	4.21	5.70	4.12
18	24			3.68	3.40	4.41	3.84	4.77	3.90	4.99	3.91	5.44	4.19	5.62	4.09
(m^3/min)	26			3.68	3.40	4.39	3.83	4.73	3.89	4.93	3.89	5.35	4.15	5.53	4.06
	28	3.33	3.20	3.67	3.39	4.37	3.82	4.68	3.87	4.88	3.87	5.27	4.13	5.44	4.03
	30	3.33	3.20	3.66	3.38	4.33	3.80	4.64	3.85	4.82	3.85	5.19	4.10	5.36	4.01
	32	3.33	3.20	3.65	3.38	4.30	3.79	4.59	3.83	4.76	3.82	5.11	4.07	5.28	3.98
	34	3.33	3.20	3.64	3.37	4.28	3.78	4.53	3.81	4.69	3.80	5.00	4.03	5.17	3.95
	35	3.33	3.20	3.64	3.37	4.28	3.78	4.50	3.78	4.65	3.79	4.95	4.02	5.12	3.93
	36	3.33	3.20	3.63	3.37	4.24	3.77	4.48	3.79	4.60	3.76	4.86	3.99	5.02	3.89
	38	3.33	3.20	3.62	3.37	4.18	3.74	4.43	3.77	4.52	3.74	4.68	3.93	4.82	3.83
	39	3.33	3.20	3.62	3.37	4.15	3.73	4.41	3.77	4.47	3.72	4.59	3.89	4.72	3.81
	41	3.33	3.20	3.61	3.36	4.02	3.68	4.23	3.70	4.28	3.65	4.39	3.82	4.50	3.70
	43	3.33	3.20	3.59	3.36	3.90	3.63	4.05	3.63	4.09	3.58	4.18	3.73	4.28	3.64

Air flow	Ambient air temp. DB	Ambient air temp. WB	Indoor air temp. 16 °CDB	18 °CDB	20 °CDB	22 °CDB	24 °CDB
	-19.8	-20	2.90	2.90	2.90	2.90	2.90
	-17.8	-18	3.09	3.09	3.09	3.09	3.09
	-15.7	-16	3.27	3.27	3.27	3.27	3.27
	-13.7	-14	3.46	3.46	3.46	3.46	3.46
	-11.7	-12	3.65	3.65	3.65	3.65	3.65
Hi	-9.6	-10	3.83	3.83	3.83	3.83	3.83
	-7.5	-8	4.07	4.07	4.07	4.07	4.07
18	-5.5	-6	4.30	4.30	4.30	4.30	4.30
(m^3/min)	-3.4	-4	4.45	4.44	4.44	4.39	4.35
	-1.3	-2	4.60	4.59	4.58	4.49	4.40
	0.8	0	4.85	4.78	4.71	4.54	4.38
	3.9	3	5.26	5.08	4.89	4.61	4.34
	7.0	6	5.75	5.38	5.00	4.65	4.30
	10.1	9	5.71	5.35	4.98	4.62	4.26
	13.2	12	5.68	5.31	4.95	4.59	4.23
	16.9	15.5	5.63	5.27	4.91	4.54	4.18

Air flow	Ambient air temp. (°CDB)	Indoor air temperature 21 °CDB 14 °CWB TC	21 °CDB 14 °CWB SHC	23 °CDB 16 °CWB TC	23 °CDB 16 °CWB SHC	26 °CDB 18 °CWB TC	26 °CDB 18 °CWB SHC	27 °CDB 19 °CWB TC	27 °CDB 19 °CWB SHC	28 °CDB 20 °CWB TC	28 °CDB 20 °CWB SHC	31 °CDB 22 °CWB TC	31 °CDB 22 °CWB SHC	33 °CDB 24 °CWB TC	33 °CDB 24 °CWB SHC
	10			3.51	3.14	4.19	3.54	4.54	3.61	4.83	3.65	5.41	3.94	5.61	3.86
	12			3.51	3.14	4.19	3.54	4.54	3.61	4.82	3.64	5.39	3.94	5.59	3.85
	14			3.51	3.14	4.19	3.54	4.54	3.61	4.81	3.64	5.37	3.93	5.57	3.85
	16			3.51	3.14	4.19	3.54	4.54	3.61	4.81	3.64	5.35	3.93	5.54	3.84
	18			3.51	3.14	4.19	3.54	4.54	3.61	4.80	3.64	5.33	3.92	5.52	3.84
Me	20			3.51	3.14	4.19	3.54	4.54	3.61	4.79	3.63	5.31	3.91	5.49	3.83
	22			3.50	3.13	4.19	3.54	4.54	3.61	4.77	3.63	5.24	3.89	5.42	3.80
16	24			3.50	3.13	4.19	3.54	4.54	3.61	4.75	3.62	5.17	3.86	5.34	3.78
(m^3/min)	26			3.50	3.13	4.17	3.54	4.49	3.59	4.69	3.60	5.09	3.84	5.26	3.75
	28	3.17	3.04	3.49	3.13	4.15	3.52	4.45	3.58	4.64	3.58	5.01	3.81	5.18	3.71
	30	3.17	3.04	3.48	3.13	4.12	3.51	4.41	3.57	4.58	3.56	4.94	3.79	5.10	3.69
	32	3.17	3.04	3.48	3.13	4.09	3.50	4.37	3.54	4.53	3.54	4.86	3.76	5.02	3.67
	34	3.17	3.04	3.46	3.12	4.07	3.50	4.31	3.52	4.46	3.51	4.76	3.73	4.92	3.64
	35	3.17	3.04	3.46	3.12	4.07	3.50	4.28	3.51	4.42	3.50	4.70	3.70	4.87	3.62
	36	3.17	3.04	3.45	3.11	4.04	3.48	4.26	3.51	4.38	3.48	4.62	3.68	4.77	3.59
	38	3.17	3.04	3.45	3.11	3.97	3.45	4.22	3.48	4.29	3.45	4.45	3.62	4.58	3.53
	39	3.17	3.04	3.44	3.11	3.94	3.44	4.19	3.48	4.25	3.43	4.37	3.58	4.49	3.50
	41	3.17	3.04	3.43	3.11	3.83	3.39	4.02	3.41	4.07	3.37	4.17	3.52	4.28	3.41
	43	3.17	3.04	3.42	3.10	3.71	3.35	3.85	3.34	3.89	3.30	3.98	3.43	4.07	3.35

Air flow	Ambient air temp. DB	Ambient air temp. WB	Indoor air temp. 16 °CDB	18 °CDB	20 °CDB	22 °CDB	24 °CDB
	-19.8	-20	2.76	2.76	2.76	2.76	2.76
	-17.8	-18	2.93	2.93	2.93	2.93	2.93
	-15.7	-16	3.11	3.11	3.11	3.11	3.11
	-13.7	-14	3.29	3.29	3.29	3.29	3.29
	-11.7	-12	3.46	3.46	3.46	3.46	3.46
Me	-9.6	-10	3.64	3.64	3.64	3.64	3.64
	-7.5	-8	3.86	3.86	3.86	3.86	3.86
16	-5.5	-6	4.09	4.09	4.09	4.09	4.09
(m^3/min)	-3.4	-4	4.23	4.22	4.22	4.17	4.13
	-1.3	-2	4.37	4.36	4.35	4.26	4.18
	0.8	0	4.61	4.54	4.48	4.32	4.16
	3.9	3	5.00	4.82	4.64	4.38	4.12
	7.0	6	5.46	5.11	4.75	4.42	4.09
	10.1	9	5.43	5.08	4.73	4.39	4.05
	13.2	12	5.39	5.05	4.70	4.36	4.01
	16.9	15.5	5.35	5.01	4.66	4.32	3.97

Air flow	Ambient air temp. (°CDB)	Indoor air temperature 21 °CDB 14 °CWB TC	21 °CDB 14 °CWB SHC	23 °CDB 16 °CWB TC	23 °CDB 16 °CWB SHC	26 °CDB 18 °CWB TC	26 °CDB 18 °CWB SHC	27 °CDB 19 °CWB TC	27 °CDB 19 °CWB SHC	28 °CDB 20 °CWB TC	28 °CDB 20 °CWB SHC	31 °CDB 22 °CWB TC	31 °CDB 22 °CWB SHC	33 °CDB 24 °CWB TC	33 °CDB 24 °CWB SHC
	10			3.32	2.91	3.97	3.27	4.29	3.35	4.57	3.39	5.12	3.67	5.31	3.58
	12			3.32	2.91	3.97	3.27	4.29	3.35	4.56	3.38	5.10	3.66	5.29	3.57
	14			3.32	2.91	3.97	3.27	4.29	3.35	4.56	3.38	5.08	3.66	5.27	3.57
	16			3.32	2.91	3.97	3.27	4.29	3.35	4.55	3.38	5.06	3.64	5.24	3.56
	18			3.32	2.91	3.97	3.27	4.29	3.35	4.54	3.38	5.04	3.64	5.22	3.55
Lo	20			3.32	2.91	3.97	3.27	4.29	3.35	4.54	3.38	5.02	3.63	5.20	3.54
	22			3.32	2.91	3.97	3.27	4.29	3.35	4.52	3.37	4.96	3.61	5.13	3.52
14	24			3.31	2.90	3.97	3.27	4.29	3.35	4.49	3.36	4.90	3.59	5.06	3.49
(m^3/min)	26			3.31	2.90	3.95	3.27	4.25	3.33	4.44	3.34	4.82	3.56	4.98	3.47
	28	3.00	2.87	3.30	2.90	3.93	3.26	4.21	3.32	4.39	3.32	4.74	3.53	4.90	3.44
	30	3.00	2.87	3.30	2.90	3.90	3.25	4.17	3.28	4.34	3.30	4.67	3.51	4.83	3.42
	32	3.00	2.87	3.29	2.90	3.87	3.24	4.13	3.27	4.29	3.26	4.60	3.48	4.75	3.39
	34	3.00	2.87	3.28	2.89	3.85	3.23	4.08	3.25	4.22	3.24	4.50	3.44	4.66	3.34
	35	3.00	2.87	3.27	2.89	3.85	3.23	4.05	3.24	4.18	3.23	4.45	3.42	4.61	3.33
	36	3.00	2.87	3.27	2.89	3.82	3.22	4.03	3.24	4.14	3.21	4.37	3.38	4.52	3.30
	38	3.00	2.87	3.26	2.88	3.76	3.20	3.99	3.22	4.06	3.19	4.21	3.33	4.34	3.25
	39	3.00	2.87	3.26	2.88	3.73	3.19	3.97	3.21	4.02	3.17	4.13	3.30	4.25	3.23
	41	3.00	2.87	3.24	2.88	3.62	3.14	3.81	3.16	3.85	3.12	3.95	3.25	4.05	3.16
	43	3.00	2.87	3.23	2.87	3.51	3.10	3.65	3.10	3.69	3.06	3.77	3.19	3.85	3.10

Air flow	Ambient air temp. DB	Ambient air temp. WB	Indoor air temp. 16 °CDB	18 °CDB	20 °CDB	22 °CDB	24 °CDB
	-19.8	-20	2.61	2.61	2.61	2.61	2.61
	-17.8	-18	2.78	2.78	2.78	2.78	2.78
	-15.7	-16	2.95	2.95	2.95	2.95	2.95
	-13.7	-14	3.11	3.11	3.11	3.11	3.11
	-11.7	-12	3.28	3.28	3.28	3.28	3.28
Lo	-9.6	-10	3.45	3.45	3.45	3.45	3.45
	-7.5	-8	3.66	3.66	3.66	3.66	3.66
14	-5.5	-6	3.87	3.87	3.87	3.87	3.87
(m^3/min)	-3.4	-4	4.01	4.00	3.99	3.95	3.92
	-1.3	-2	4.14	4.13	4.12	4.04	3.96
	0.8	0	4.37	4.30	4.24	4.09	3.94
	3.9	3	4.74	4.57	4.40	4.15	3.90
	7.0	6	5.18	4.84	4.50	4.19	3.87
	10.1	9	5.14	4.81	4.48	4.16	3.84
	13.2	12	5.11	4.78	4.46	4.13	3.80
	16.9	15.5	5.07	4.74	4.42	4.09	3.76

Note(1) This data shows average statuses out of those possible to occur in the system control.
(Depending on controls, there may be ranges where the operation is not conducted continuously.)
(2) Symbols are as follows
TC :Total cooling capacity(kW)
SHC :Sensible heat capacity(kW)

Cool mode	Uhi	Hi	Me	Lo
Air flow	20.00	18	16	14
TC	5.09	4.50	4.28	4.05
SHF	0.84	0.84	0.82	0.80

Heat mode	Uhi	Hi	Me	Lo
Air flow	20	18	16	14
Heating capacity	5.65	5.00	4.75	4.50

Model **FDT56KXE6**

Cool Mode

Air flow	Ambient air temp. (℃DB)	Indoor air temperature 21 ℃DB 14 ℃WB TC	21 ℃DB 14 ℃WB SHC	23 ℃DB 16 ℃WB TC	23 ℃DB 16 ℃WB SHC	26 ℃DB 18 ℃WB TC	26 ℃DB 18 ℃WB SHC	27 ℃DB 19 ℃WB TC	27 ℃DB 19 ℃WB SHC	28 ℃DB 20 ℃WB TC	28 ℃DB 20 ℃WB SHC	31 ℃DB 22 ℃WB TC	31 ℃DB 22 ℃WB SHC	33 ℃DB 24 ℃WB TC	33 ℃DB 24 ℃WB SHC
Uhi	10			5.10	4.52	6.09	5.09	6.59	5.18	7.01	5.25	7.86	5.69	8.16	5.53
	12			5.10	4.52	6.09	5.09	6.59	5.18	7.01	5.25	7.83	5.68	8.12	5.51
	14			5.10	4.52	6.09	5.09	6.59	5.18	7.00	5.25	7.80	5.67	8.09	5.50
	16			5.10	4.52	6.09	5.09	6.59	5.18	6.99	5.22	7.77	5.66	8.05	5.49
	18			5.10	4.52	6.09	5.09	6.59	5.18	6.98	5.22	7.74	5.65	8.02	5.48
	20			5.10	4.52	6.09	5.09	6.59	5.18	6.97	5.21	7.72	5.64	7.98	5.47
	22			5.09	4.52	6.09	5.09	6.59	5.18	6.93	5.20	7.62	5.58	7.87	5.44
20	24			5.08	4.51	6.09	5.09	6.59	5.18	6.90	5.19	7.52	5.54	7.76	5.41
(m^3/min)	26			5.08	4.51	6.06	5.08	6.53	5.16	6.82	5.16	7.40	5.50	7.65	5.37
	28	4.60	4.42	5.08	4.51	6.03	5.07	6.47	5.14	6.74	5.13	7.28	5.46	7.53	5.34
	30	4.60	4.42	5.06	4.49	5.99	5.05	6.41	5.11	6.66	5.10	7.17	5.43	7.41	5.30
	32	4.60	4.42	5.05	4.49	5.94	5.03	6.34	5.09	6.58	5.08	7.06	5.39	7.30	5.27
	34	4.60	4.42	5.03	4.48	5.92	5.03	6.26	5.06	6.48	5.04	6.91	5.34	7.15	5.23
	35	4.60	4.42	5.03	4.48	5.91	5.02	6.22	5.04	6.43	5.02	6.84	5.32	7.07	5.20
	36	4.60	4.42	5.02	4.48	5.86	5.00	6.19	5.03	6.36	5.00	6.71	5.28	6.94	5.15
	38	4.60	4.42	5.01	4.48	5.78	4.97	6.13	5.01	6.24	4.96	6.47	5.19	6.66	5.07
	39	4.60	4.42	5.00	4.47	5.73	4.95	6.10	5.00	6.18	4.93	6.35	5.15	6.53	5.02
	41	4.60	4.42	4.98	4.46	5.56	4.88	5.85	4.91	5.92	4.83	6.06	5.05	6.22	4.93
	43	4.60	4.42	4.97	4.46	5.39	4.82	5.60	4.81	5.66	4.74	5.78	4.96	5.91	4.83

Heat Mode

Air flow	Ambient air temp. DB	Ambient air temp. WB	Indoor air temp. 16 ℃CDB	18 ℃CDB	20 ℃CDB	22 ℃CDB	24 ℃CDB
Uhi	-19.8	-20	4.05	4.05	4.05	4.05	4.05
	-17.8	-18	4.32	4.32	4.32	4.32	4.32
	-15.7	-16	4.58	4.58	4.58	4.58	4.58
	-13.7	-14	4.84	4.84	4.84	4.84	4.84
	-11.7	-12	5.10	5.10	5.10	5.10	5.10
	-9.6	-10	5.36	5.36	5.36	5.36	5.36
	-7.5	-8	5.69	5.69	5.69	5.69	5.69
20	-5.5	-6	6.01	6.01	6.01	6.01	6.01
(m^3/min)	-3.4	-4	6.22	6.21	6.20	6.14	6.08
	-1.3	-2	6.43	6.41	6.40	6.27	6.15
	0.8	0	6.78	6.68	6.59	6.35	6.12
	3.9	3	7.36	7.09	6.83	6.45	6.06
	7.0	6	8.04	7.51	6.99	6.50	6.01
	10.1	9	7.99	7.47	6.96	6.46	5.96
	13.2	12	7.93	7.43	6.92	6.41	5.91
	16.9	15.5	7.87	7.37	6.86	6.35	5.85

Air flow	Ambient air temp. (℃DB)	Indoor air temperature 21 ℃DB 14 ℃WB TC	21 ℃DB 14 ℃WB SHC	23 ℃DB 16 ℃WB TC	23 ℃DB 16 ℃WB SHC	26 ℃DB 18 ℃WB TC	26 ℃DB 18 ℃WB SHC	27 ℃DB 19 ℃WB TC	27 ℃DB 19 ℃WB SHC	28 ℃DB 20 ℃WB TC	28 ℃DB 20 ℃WB SHC	31 ℃DB 22 ℃WB TC	31 ℃DB 22 ℃WB SHC	33 ℃DB 24 ℃WB TC	33 ℃DB 24 ℃WB SHC
Hi	10			4.59	4.07	5.49	4.59	5.94	4.66	6.32	4.73	7.07	5.12	7.35	4.97
	12			4.59	4.07	5.49	4.59	5.94	4.66	6.31	4.72	7.05	5.11	7.31	4.96
	14			4.59	4.07	5.49	4.59	5.94	4.66	6.30	4.72	7.02	5.10	7.28	4.95
	16			4.59	4.07	5.49	4.59	5.94	4.66	6.29	4.70	7.00	5.10	7.25	4.94
	18			4.59	4.07	5.49	4.59	5.94	4.66	6.28	4.70	6.97	5.09	7.22	4.93
	20			4.59	4.07	5.49	4.59	5.94	4.66	6.27	4.69	6.95	5.08	7.19	4.93
	22			4.58	4.06	5.49	4.59	5.94	4.66	6.24	4.68	6.86	5.02	7.09	4.90
18	24			4.58	4.06	5.48	4.58	5.94	4.66	6.21	4.67	6.77	4.99	6.99	4.87
(m^3/min)	26			4.57	4.06	5.46	4.57	5.88	4.64	6.14	4.65	6.66	4.95	6.88	4.83
	28	4.14	3.97	4.57	4.06	5.43	4.56	5.82	4.62	6.07	4.62	6.56	4.92	6.78	4.80
	30	4.14	3.97	4.56	4.05	5.39	4.55	5.77	4.60	6.00	4.60	6.46	4.89	6.67	4.77
	32	4.14	3.97	4.55	4.04	5.35	4.53	5.71	4.58	5.93	4.57	6.36	4.86	6.57	4.74
	34	4.14	3.97	4.53	4.04	5.33	4.52	5.64	4.55	5.83	4.54	6.22	4.81	6.44	4.70
	35	4.14	3.97	4.52	4.03	5.32	4.52	5.60	4.54	5.79	4.52	6.16	4.79	6.37	4.68
	36	4.14	3.97	4.52	4.03	5.28	4.50	5.57	4.53	5.73	4.50	6.05	4.75	6.25	4.64
	38	4.14	3.97	4.51	4.03	5.20	4.48	5.52	4.51	5.62	4.46	5.82	4.67	6.00	4.56
	39	4.14	3.97	4.50	4.02	5.16	4.46	5.49	4.50	5.56	4.44	5.71	4.64	5.87	4.52
	41	4.14	3.97	4.49	4.02	5.00	4.39	5.26	4.42	5.33	4.35	5.46	4.55	5.60	4.44
	43	4.14	3.97	4.47	4.01	4.85	4.33	5.04	4.33	5.10	4.27	5.21	4.47	5.32	4.35

Air flow	Ambient air temp. DB	Ambient air temp. WB	Indoor air temp. 16 ℃CDB	18 ℃CDB	20 ℃CDB	22 ℃CDB	24 ℃CDB
Hi	-19.8	-20	3.65	3.65	3.65	3.65	3.65
	-17.8	-18	3.89	3.89	3.89	3.89	3.89
	-15.7	-16	4.12	4.12	4.12	4.12	4.12
	-13.7	-14	4.36	4.36	4.36	4.36	4.36
	-11.7	-12	4.59	4.59	4.59	4.59	4.59
	-9.6	-10	4.83	4.83	4.83	4.83	4.83
	-7.5	-8	5.12	5.12	5.12	5.12	5.12
18	-5.5	-6	5.42	5.42	5.42	5.42	5.42
(m^3/min)	-3.4	-4	5.61	5.60	5.59	5.54	5.48
	-1.3	-2	5.80	5.78	5.76	5.65	5.54
	0.8	0	6.11	6.02	5.94	5.73	5.51
	3.9	3	6.63	6.39	6.16	5.81	5.47
	7.0	6	7.25	6.77	6.30	5.86	5.42
	10.1	9	7.20	6.74	6.28	5.82	5.37
	13.2	12	7.15	6.69	6.24	5.78	5.32
	16.9	15.5	7.10	6.64	6.18	5.73	5.27

Air flow	Ambient air temp. (℃DB)	Indoor air temperature 21 ℃DB 14 ℃WB TC	21 ℃DB 14 ℃WB SHC	23 ℃DB 16 ℃WB TC	23 ℃DB 16 ℃WB SHC	26 ℃DB 18 ℃WB TC	26 ℃DB 18 ℃WB SHC	27 ℃DB 19 ℃WB TC	27 ℃DB 19 ℃WB SHC	28 ℃DB 20 ℃WB TC	28 ℃DB 20 ℃WB SHC	31 ℃DB 22 ℃WB TC	31 ℃DB 22 ℃WB SHC	33 ℃DB 24 ℃WB TC	33 ℃DB 24 ℃WB SHC
Me	10			4.31	3.74	5.15	4.22	5.58	4.31	5.93	4.35	6.64	4.69	6.90	4.58
	12			4.31	3.74	5.15	4.22	5.58	4.31	5.92	4.34	6.62	4.68	6.87	4.57
	14			4.31	3.74	5.15	4.22	5.58	4.31	5.92	4.34	6.60	4.67	6.84	4.56
	16			4.31	3.74	5.15	4.22	5.58	4.31	5.91	4.34	6.57	4.66	6.81	4.55
	18			4.31	3.74	5.15	4.22	5.58	4.31	5.90	4.34	6.55	4.66	6.78	4.54
	20			4.31	3.74	5.15	4.22	5.58	4.31	5.89	4.33	6.52	4.65	6.75	4.53
	22			4.31	3.74	5.15	4.22	5.58	4.31	5.86	4.32	6.44	4.62	6.66	4.50
16	24			4.30	3.73	5.15	4.22	5.58	4.31	5.84	4.31	6.36	4.59	6.57	4.48
(m^3/min)	26			4.30	3.73	5.13	4.21	5.52	4.28	5.77	4.29	6.26	4.56	6.47	4.45
	28	3.89	3.69	4.29	3.73	5.10	4.20	5.47	4.26	5.70	4.26	6.16	4.52	6.36	4.41
	30	3.89	3.69	4.28	3.72	5.06	4.17	5.42	4.24	5.63	4.24	6.07	4.50	6.27	4.39
	32	3.89	3.69	4.27	3.72	5.02	4.16	5.37	4.22	5.57	4.21	5.97	4.46	6.17	4.35
	34	3.89	3.69	4.26	3.71	5.01	4.16	5.30	4.19	5.48	4.18	5.85	4.41	6.05	4.31
	35	3.89	3.69	4.25	3.70	5.00	4.15	5.26	4.16	5.43	4.16	5.78	4.39	5.98	4.29
	36	3.89	3.69	4.24	3.70	4.96	4.14	5.23	4.17	5.38	4.14	5.68	4.36	5.87	4.25
	38	3.89	3.69	4.23	3.70	4.88	4.10	5.18	4.14	5.28	4.10	5.47	4.28	5.63	4.18
	39	3.89	3.69	4.23	3.70	4.85	4.09	5.15	4.13	5.23	4.08	5.37	4.25	5.52	4.14
	41	3.89	3.69	4.21	3.69	4.70	4.03	4.94	4.05	5.01	4.00	5.13	4.16	5.26	4.06
	43	3.89	3.69	4.20	3.68	4.56	3.98	4.73	3.97	4.79	3.92	4.89	4.09	5.00	3.97

Air flow	Ambient air temp. DB	Ambient air temp. WB	Indoor air temp. 16 ℃CDB	18 ℃CDB	20 ℃CDB	22 ℃CDB	24 ℃CDB
Me	-19.8	-20	3.43	3.43	3.43	3.43	3.43
	-17.8	-18	3.65	3.65	3.65	3.65	3.65
	-15.7	-16	3.88	3.88	3.88	3.88	3.88
	-13.7	-14	4.10	4.10	4.10	4.10	4.10
	-11.7	-12	4.32	4.32	4.32	4.32	4.32
	-9.6	-10	4.54	4.54	4.54	4.54	4.54
	-7.5	-8	4.81	4.81	4.81	4.81	4.81
16	-5.5	-6	5.09	5.09	5.09	5.09	5.09
(m^3/min)	-3.4	-4	5.27	5.26	5.25	5.20	5.15
	-1.3	-2	5.45	5.43	5.42	5.31	5.21
	0.8	0	5.74	5.66	5.58	5.38	5.18
	3.9	3	6.23	6.01	5.79	5.46	5.14
	7.0	6	6.81	6.36	5.92	5.51	5.09
	10.1	9	6.76	6.33	5.90	5.47	5.05
	13.2	12	6.72	6.29	5.86	5.43	5.00
	16.9	15.5	6.67	6.24	5.81	5.38	4.95

Air flow	Ambient air temp. (℃DB)	Indoor air temperature 21 ℃DB 14 ℃WB TC	21 ℃DB 14 ℃WB SHC	23 ℃DB 16 ℃WB TC	23 ℃DB 16 ℃WB SHC	26 ℃DB 18 ℃WB TC	26 ℃DB 18 ℃WB SHC	27 ℃DB 19 ℃WB TC	27 ℃DB 19 ℃WB SHC	28 ℃DB 20 ℃WB TC	28 ℃DB 20 ℃WB SHC	31 ℃DB 22 ℃WB TC	31 ℃DB 22 ℃WB SHC	33 ℃DB 24 ℃WB TC	33 ℃DB 24 ℃WB SHC
Lo	10			4.08	3.40	4.88	3.84	5.28	3.92	5.62	3.98	6.29	4.29	6.53	4.19
	12			4.08	3.40	4.88	3.84	5.28	3.92	5.61	3.98	6.27	4.29	6.50	4.18
	14			4.08	3.40	4.88	3.84	5.28	3.92	5.60	3.97	6.25	4.28	6.48	4.18
	16			4.08	3.40	4.88	3.84	5.28	3.92	5.59	3.96	6.22	4.27	6.45	4.17
	18			4.08	3.40	4.88	3.84	5.28	3.92	5.59	3.96	6.20	4.26	6.42	4.15
	20			4.08	3.40	4.88	3.84	5.28	3.92	5.58	3.96	6.18	4.26	6.39	4.14
	22			4.08	3.40	4.88	3.84	5.28	3.92	5.55	3.94	6.10	4.23	6.30	4.11
14	24			4.07	3.40	4.88	3.84	5.28	3.92	5.53	3.93	6.02	4.19	6.22	4.06
(m^3/min)	26			4.07	3.40	4.85	3.83	5.23	3.90	5.46	3.90	5.93	4.16	6.12	4.03
	28	3.69	3.36	4.06	3.39	4.83	3.82	5.18	3.88	5.40	3.88	5.83	4.11	6.03	4.00
	30	3.69	3.36	4.05	3.39	4.79	3.81	5.13	3.86	5.33	3.85	5.74	4.08	5.94	3.98
	32	3.69	3.36	4.04	3.39	4.76	3.80	5.08	3.84	5.27	3.83	5.65	4.05	5.85	3.95
	34	3.69	3.36	4.03	3.38	4.74	3.79	5.01	3.81	5.19	3.80	5.53	4.01	5.72	3.91
	35	3.69	3.36	4.02	3.38	4.73	3.78	4.98	3.78	5.14	3.79	5.47	3.99	5.66	3.89
	36	3.69	3.36	4.02	3.38	4.70	3.77	4.96	3.80	5.10	3.77	5.38	3.96	5.55	3.86
	38	3.69	3.36	4.01	3.37	4.62	3.73	4.91	3.78	5.00	3.73	5.18	3.89	5.33	3.78
	39	3.69	3.36	4.00	3.36	4.59	3.72	4.88	3.77	4.95	3.72	5.08	3.85	5.22	3.75
	41	3.69	3.36	3.99	3.36	4.45	3.67	4.68	3.68	4.74	3.63	4.86	3.77	4.98	3.67
	43	3.69	3.36	3.98	3.35	4.31	3.61	4.48	3.60	4.53	3.55	4.63	3.69	4.73	3.59

Air flow	Ambient air temp. DB	Ambient air temp. WB	Indoor air temp. 16 ℃CDB	18 ℃CDB	20 ℃CDB	22 ℃CDB	24 ℃CDB
Lo	-19.8	-20	3.25	3.25	3.25	3.25	3.25
	-17.8	-18	3.46	3.46	3.46	3.46	3.46
	-15.7	-16	3.67	3.67	3.67	3.67	3.67
	-13.7	-14	3.88	3.88	3.88	3.88	3.88
	-11.7	-12	4.09	4.09	4.09	4.09	4.09
	-9.6	-10	4.30	4.30	4.30	4.30	4.30
	-7.5	-8	4.56	4.56	4.56	4.56	4.56
14	-5.5	-6	4.82	4.82	4.82	4.82	4.82
(m^3/min)	-3.4	-4	4.99	4.99	4.98	4.93	4.88
	-1.3	-2	5.16	5.15	5.13	5.03	4.94
	0.8	0	5.44	5.36	5.29	5.10	4.91
	3.9	3	5.90	5.69	5.48	5.18	4.87
	7.0	6	6.45	6.03	5.61	5.22	4.82
	10.1	9	6.41	6.00	5.59	5.19	4.78
	13.2	12	6.37	5.96	5.55	5.15	4.74
	16.9	15.5	6.32	5.91	5.50	5.10	4.69

Note(1) This data shows average statuses out of those possible to occur in the system control.
(Depending on controls, there may be ranges where the operation is not conducted continuously.)
(2) Symbols are as follows
TC :Total cooling capacity(kW)
SHC :Sensible heat capacity(kW)

Cool mode	Uhi	Hi	Me	Lo
Air flow	20.00	18	16	14
TC	6.22	5.60	5.26	4.98
SHF	0.81	0.81	0.79	0.76

Heat mode	Uhi	Hi	Me	Lo
Air flow	20	18	16	14
Heating capacity	6.99	6.30	5.92	5.61

Model **FDT71KXE6** Cool Mode

Air flow	Ambient air temp. (℃DB)	Indoor air temperature 21 ℃DB 14 ℃WB TC	21 ℃DB 14 ℃WB SHC	23 ℃DB 16 ℃WB TC	23 ℃DB 16 ℃WB SHC	26 ℃DB 18 ℃WB TC	26 ℃DB 18 ℃WB SHC	27 ℃DB 19 ℃WB TC	27 ℃DB 19 ℃WB SHC	28 ℃DB 20 ℃WB TC	28 ℃DB 20 ℃WB SHC	31 ℃DB 22 ℃WB TC	31 ℃DB 22 ℃WB SHC	33 ℃DB 24 ℃WB TC	33 ℃DB 24 ℃WB SHC
Uhi	10			6.34	4.87	7.58	5.51	8.20	5.66	8.73	5.75	9.78	6.20	10.15	6.03
	12			6.34	4.87	7.58	5.51	8.20	5.66	8.72	5.74	9.74	6.18	10.11	6.02
	14			6.34	4.87	7.58	5.51	8.20	5.66	8.71	5.74	9.71	6.17	10.06	5.99
	16			6.34	4.87	7.58	5.51	8.20	5.66	8.69	5.73	9.67	6.16	10.02	5.98
	18			6.34	4.87	7.58	5.51	8.20	5.66	8.68	5.73	9.64	6.14	9.98	5.97
	20			6.34	4.87	7.58	5.51	8.20	5.66	8.67	5.72	9.60	6.13	9.93	5.92
	22			6.34	4.87	7.58	5.51	8.20	5.66	8.63	5.71	9.48	6.08	9.80	5.88
20	24			6.33	4.87	7.58	5.51	8.20	5.66	8.59	5.69	9.36	6.01	9.66	5.84
(m³/min)	26			6.32	4.86	7.54	5.50	8.13	5.63	8.49	5.65	9.21	5.96	9.51	5.79
	28	5.73	4.79	6.32	4.86	7.51	5.49	8.05	5.60	8.39	5.61	9.06	5.91	9.37	5.74
	30	5.73	4.79	6.30	4.86	7.45	5.46	7.97	5.56	8.29	5.56	8.92	5.86	9.23	5.69
	32	5.73	4.79	6.28	4.84	7.39	5.41	7.89	5.52	8.19	5.52	8.79	5.81	9.09	5.64
	34	5.73	4.79	6.26	4.83	7.37	5.41	7.79	5.48	8.06	5.46	8.60	5.72	8.90	5.57
	35	5.73	4.79	6.25	4.83	7.35	5.40	7.74	5.50	8.00	5.44	8.51	5.70	8.80	5.53
	36	5.73	4.79	6.25	4.83	7.30	5.38	7.70	5.44	7.92	5.40	8.36	5.64	8.63	5.47
	38	5.73	4.79	6.23	4.82	7.19	5.34	7.62	5.40	7.77	5.32	8.05	5.49	8.29	5.34
	39	5.73	4.79	6.22	4.81	7.13	5.32	7.59	5.39	7.69	5.29	7.90	5.44	8.12	5.30
	41	5.73	4.79	6.20	4.81	6.92	5.23	7.28	5.26	7.37	5.18	7.55	5.32	7.74	5.17
	43	5.73	4.79	6.18	4.80	6.70	5.12	6.97	5.13	7.04	5.04	7.20	5.19	7.36	5.04

Heat Mode

Air flow	Ambient air temp. DB	Ambient air temp. WB	Indoor air temp. 16 ℃CDB	18 ℃CDB	20 ℃CDB	22 ℃CDB	24 ℃CDB
Uhi	-19.8	-20	5.06	5.06	5.06	5.06	5.06
	-17.8	-18	5.38	5.38	5.38	5.38	5.38
	-15.7	-16	5.71	5.71	5.71	5.71	5.71
	-13.7	-14	6.03	6.03	6.03	6.03	6.03
	-11.7	-12	6.36	6.36	6.36	6.36	6.36
	-9.6	-10	6.69	6.69	6.69	6.69	6.69
	-7.5	-8	7.09	7.09	7.09	7.09	7.09
20	-5.5	-6	7.50	7.50	7.50	7.50	7.50
(m³/min)	-3.4	-4	7.76	7.75	7.74	7.66	7.59
	-1.3	-2	8.02	8.00	7.98	7.83	7.67
	0.8	0	8.46	8.34	8.22	7.92	7.63
	3.9	3	9.18	8.85	8.52	8.04	7.56
	7.0	6	10.03	9.37	8.72	8.11	7.50
	10.1	9	9.96	9.32	8.69	8.06	7.43
	13.2	12	9.90	9.27	8.63	8.00	7.37
	16.9	15.5	9.82	9.19	8.56	7.92	7.29

Air flow	Ambient air temp. (℃DB)	Indoor air temperature 21 ℃DB 14 ℃WB TC	21 ℃DB 14 ℃WB SHC	23 ℃DB 16 ℃WB TC	23 ℃DB 16 ℃WB SHC	26 ℃DB 18 ℃WB TC	26 ℃DB 18 ℃WB SHC	27 ℃DB 19 ℃WB TC	27 ℃DB 19 ℃WB SHC	28 ℃DB 20 ℃WB TC	28 ℃DB 20 ℃WB SHC	31 ℃DB 22 ℃WB TC	31 ℃DB 22 ℃WB SHC	33 ℃DB 24 ℃WB TC	33 ℃DB 24 ℃WB SHC
Hi	10			5.82	4.44	6.96	5.03	7.53	5.16	8.01	5.23	8.97	5.65	9.31	5.50
	12			5.82	4.44	6.96	5.03	7.53	5.16	8.00	5.23	8.94	5.64	9.27	5.47
	14			5.82	4.44	6.96	5.03	7.53	5.16	7.99	5.23	8.90	5.62	9.23	5.46
	16			5.82	4.44	6.96	5.03	7.53	5.16	7.97	5.22	8.87	5.61	9.19	5.45
	18			5.82	4.44	6.96	5.03	7.53	5.16	7.96	5.22	8.84	5.60	9.15	5.43
	20			5.82	4.44	6.96	5.03	7.53	5.16	7.95	5.21	8.81	5.59	9.11	5.42
	22			5.81	4.43	6.95	5.03	7.53	5.16	7.92	5.20	8.70	5.54	8.99	5.37
18	24			5.80	4.43	6.95	5.03	7.53	5.16	7.88	5.19	8.58	5.49	8.86	5.31
(m³/min)	26			5.80	4.43	6.92	5.01	7.46	5.13	7.79	5.15	8.45	5.42	8.73	5.27
	28	5.25	4.36	5.79	4.42	6.89	5.00	7.38	5.10	7.69	5.10	8.31	5.37	8.59	5.22
	30	5.25	4.36	5.78	4.41	6.83	4.97	7.31	5.06	7.60	5.06	8.19	5.33	8.46	5.17
	32	5.25	4.36	5.77	4.41	6.78	4.95	7.24	5.04	7.51	5.02	8.06	5.28	8.33	5.13
	34	5.25	4.36	5.75	4.40	6.76	4.94	7.15	4.99	7.39	4.97	7.89	5.21	8.16	5.07
	35	5.25	4.36	5.74	4.40	6.75	4.93	7.10	4.97	7.33	4.95	7.80	5.18	8.08	5.03
	36	5.25	4.36	5.73	4.39	6.69	4.90	7.06	4.95	7.26	4.92	7.66	5.13	7.92	4.98
	38	5.25	4.36	5.72	4.39	6.59	4.85	6.99	4.93	7.12	4.86	7.38	5.01	7.61	4.85
	39	5.25	4.36	5.71	4.39	6.54	4.83	6.96	4.91	7.05	4.84	7.24	4.94	7.45	4.80
	41	5.25	4.36	5.69	4.38	6.35	4.76	6.67	4.78	6.76	4.71	6.92	4.84	7.10	4.70
	43	5.25	4.36	5.67	4.37	6.15	4.67	6.39	4.67	6.46	4.59	6.60	4.72	6.75	4.58

Air flow	Ambient air temp. DB	Ambient air temp. WB	Indoor air temp. 16 ℃CDB	18 ℃CDB	20 ℃CDB	22 ℃CDB	24 ℃CDB
Hi	-19.8	-20	4.64	4.64	4.64	4.64	4.64
	-17.8	-18	4.94	4.94	4.94	4.94	4.94
	-15.7	-16	5.24	5.24	5.24	5.24	5.24
	-13.7	-14	5.54	5.54	5.54	5.54	5.54
	-11.7	-12	5.83	5.83	5.83	5.83	5.83
	-9.6	-10	6.13	6.13	6.13	6.13	6.13
	-7.5	-8	6.51	6.51	6.51	6.51	6.51
18	-5.5	-6	6.88	6.88	6.88	6.88	6.88
(m³/min)	-3.4	-4	7.12	7.11	7.10	7.03	6.96
	-1.3	-2	7.36	7.34	7.32	7.18	7.04
	0.8	0	7.76	7.65	7.54	7.27	7.00
	3.9	3	8.42	8.12	7.82	7.38	6.94
	7.0	6	9.20	8.60	8.00	7.44	6.88
	10.1	9	9.14	8.56	7.97	7.40	6.82
	13.2	12	9.08	8.50	7.92	7.34	6.76
	16.9	15.5	9.01	8.43	7.85	7.27	6.69

Air flow	Ambient air temp. (℃DB)	Indoor air temperature 21 ℃DB 14 ℃WB TC	21 ℃DB 14 ℃WB SHC	23 ℃DB 16 ℃WB TC	23 ℃DB 16 ℃WB SHC	26 ℃DB 18 ℃WB TC	26 ℃DB 18 ℃WB SHC	27 ℃DB 19 ℃WB TC	27 ℃DB 19 ℃WB SHC	28 ℃DB 20 ℃WB TC	28 ℃DB 20 ℃WB SHC	31 ℃DB 22 ℃WB TC	31 ℃DB 22 ℃WB SHC	33 ℃DB 24 ℃WB TC	33 ℃DB 24 ℃WB SHC
Me	10			5.47	4.12	6.54	4.67	7.07	4.80	7.52	4.87	8.43	5.25	8.75	5.11
	12			5.47	4.12	6.54	4.67	7.07	4.80	7.51	4.87	8.40	5.24	8.71	5.09
	14			5.47	4.12	6.54	4.67	7.07	4.80	7.50	4.86	8.37	5.23	8.67	5.08
	16			5.47	4.12	6.54	4.67	7.07	4.80	7.49	4.86	8.33	5.21	8.64	5.07
	18			5.47	4.12	6.54	4.67	7.07	4.80	7.48	4.85	8.30	5.20	8.60	5.03
	20			5.47	4.12	6.54	4.67	7.07	4.80	7.47	4.85	8.27	5.18	8.56	5.02
	22			5.46	4.11	6.53	4.66	7.07	4.80	7.44	4.84	8.17	5.14	8.44	4.98
16	24			5.45	4.11	6.53	4.66	7.07	4.80	7.40	4.82	8.06	5.09	8.33	4.95
(m³/min)	26			5.45	4.11	6.50	4.65	7.00	4.76	7.31	4.78	7.94	5.05	8.20	4.89
	28	4.94	4.05	5.44	4.10	6.47	4.64	6.94	4.74	7.23	4.75	7.81	5.00	8.07	4.85
	30	4.94	4.05	5.43	4.10	6.42	4.61	6.87	4.69	7.14	4.71	7.69	4.95	7.95	4.80
	32	4.94	4.05	5.42	4.10	6.37	4.59	6.80	4.66	7.06	4.65	7.57	4.90	7.83	4.76
	34	4.94	4.05	5.40	4.09	6.35	4.59	6.71	4.63	6.95	4.61	7.41	4.83	7.67	4.70
	35	4.94	4.05	5.39	4.08	6.34	4.58	6.67	4.60	6.89	4.59	7.33	4.80	7.59	4.67
	36	4.94	4.05	5.38	4.08	6.29	4.56	6.64	4.60	6.82	4.57	7.20	4.75	7.44	4.60
	38	4.94	4.05	5.37	4.07	6.19	4.51	6.57	4.57	6.69	4.51	6.94	4.64	7.14	4.51
	39	4.94	4.05	5.36	4.07	6.15	4.49	6.54	4.56	6.63	4.48	6.81	4.60	7.00	4.46
	41	4.94	4.05	5.34	4.06	5.96	4.41	6.27	4.44	6.35	4.37	6.50	4.48	6.67	4.35
	43	4.94	4.05	5.32	4.05	5.78	4.33	6.00	4.33	6.07	4.26	6.20	4.37	6.34	4.24

Air flow	Ambient air temp. DB	Ambient air temp. WB	Indoor air temp. 16 ℃CDB	18 ℃CDB	20 ℃CDB	22 ℃CDB	24 ℃CDB
Me	-19.8	-20	4.36	4.36	4.36	4.36	4.36
	-17.8	-18	4.64	4.64	4.64	4.64	4.64
	-15.7	-16	4.92	4.92	4.92	4.92	4.92
	-13.7	-14	5.20	5.20	5.20	5.20	5.20
	-11.7	-12	5.48	5.48	5.48	5.48	5.48
	-9.6	-10	5.77	5.77	5.77	5.77	5.77
	-7.5	-8	6.12	6.12	6.12	6.12	6.12
16	-5.5	-6	6.47	6.47	6.47	6.47	6.47
(m³/min)	-3.4	-4	6.69	6.68	6.67	6.61	6.54
	-1.3	-2	6.92	6.90	6.88	6.75	6.62
	0.8	0	7.29	7.19	7.09	6.83	6.58
	3.9	3	7.91	7.63	7.35	6.94	6.52
	7.0	6	8.65	8.08	7.52	6.99	6.47
	10.1	9	8.59	8.04	7.49	6.95	6.41
	13.2	12	8.54	7.99	7.44	6.90	6.35
	16.9	15.5	8.47	7.92	7.38	6.83	6.29

Air flow	Ambient air temp. (℃DB)	Indoor air temperature 21 ℃DB 14 ℃WB TC	21 ℃DB 14 ℃WB SHC	23 ℃DB 16 ℃WB TC	23 ℃DB 16 ℃WB SHC	26 ℃DB 18 ℃WB TC	26 ℃DB 18 ℃WB SHC	27 ℃DB 19 ℃WB TC	27 ℃DB 19 ℃WB SHC	28 ℃DB 20 ℃WB TC	28 ℃DB 20 ℃WB SHC	31 ℃DB 22 ℃WB TC	31 ℃DB 22 ℃WB SHC	33 ℃DB 24 ℃WB TC	33 ℃DB 24 ℃WB SHC
Lo	10			5.12	3.79	6.12	4.30	6.63	4.43	7.05	4.50	7.90	4.86	8.20	4.70
	12			5.12	3.79	6.12	4.30	6.63	4.43	7.04	4.50	7.87	4.84	8.16	4.69
	14			5.12	3.79	6.12	4.30	6.63	4.43	7.03	4.50	7.84	4.83	8.13	4.68
	16			5.12	3.79	6.12	4.30	6.63	4.43	7.02	4.49	7.81	4.82	8.09	4.66
	18			5.12	3.79	6.12	4.30	6.63	4.43	7.01	4.49	7.78	4.80	8.06	4.66
	20			5.12	3.79	6.12	4.30	6.63	4.43	7.00	4.48	7.75	4.78	8.02	4.64
	22			5.12	3.79	6.12	4.30	6.63	4.43	6.97	4.47	7.65	4.74	7.91	4.60
14	24			5.11	3.79	6.12	4.30	6.63	4.43	6.94	4.44	7.56	4.71	7.80	4.56
(m³/min)	26			5.10	3.78	6.09	4.29	6.56	4.40	6.85	4.41	7.44	4.66	7.68	4.52
	28	4.63	3.73	5.10	3.78	6.06	4.28	6.50	4.37	6.77	4.38	7.32	4.61	7.56	4.47
	30	4.63	3.73	5.09	3.78	6.02	4.26	6.44	4.34	6.69	4.34	7.21	4.56	7.45	4.43
	32	4.63	3.73	5.08	3.78	5.97	4.24	6.38	4.32	6.62	4.32	7.10	4.52	7.34	4.39
	34	4.63	3.73	5.06	3.77	5.95	4.23	6.29	4.28	6.51	4.26	6.95	4.46	7.18	4.31
	35	4.63	3.73	5.05	3.76	5.94	4.22	6.25	4.25	6.46	4.24	6.87	4.43	7.11	4.29
	36	4.63	3.73	5.04	3.76	5.89	4.20	6.22	4.24	6.39	4.21	6.75	4.37	6.97	4.24
	38	4.63	3.73	5.03	3.75	5.80	4.15	6.16	4.22	6.27	4.16	6.50	4.27	6.69	4.14
	39	4.63	3.73	5.03	3.75	5.76	4.14	6.13	4.20	6.21	4.14	6.38	4.23	6.56	4.10
	41	4.63	3.73	5.01	3.75	5.59	4.05	5.88	4.09	5.95	4.02	6.09	4.12	6.25	3.99
	43	4.63	3.73	4.99	3.73	5.41	3.98	5.63	3.98	5.69	3.91	5.81	4.01	5.94	3.86

Air flow	Ambient air temp. DB	Ambient air temp. WB	Indoor air temp. 16 ℃CDB	18 ℃CDB	20 ℃CDB	22 ℃CDB	24 ℃CDB
Lo	-19.8	-20	4.08	4.08	4.08	4.08	4.08
	-17.8	-18	4.35	4.35	4.35	4.35	4.35
	-15.7	-16	4.61	4.61	4.61	4.61	4.61
	-13.7	-14	4.87	4.87	4.87	4.87	4.87
	-11.7	-12	5.13	5.13	5.13	5.13	5.13
	-9.6	-10	5.40	5.40	5.40	5.40	5.40
	-7.5	-8	5.73	5.73	5.73	5.73	5.73
14	-5.5	-6	6.05	6.05	6.05	6.05	6.05
(m³/min)	-3.4	-4	6.27	6.26	6.25	6.19	6.12
	-1.3	-2	6.48	6.46	6.44	6.32	6.20
	0.8	0	6.83	6.73	6.64	6.40	6.16
	3.9	3	7.41	7.15	6.88	6.49	6.11
	7.0	6	8.10	7.57	7.04	6.55	6.05
	10.1	9	8.04	7.53	7.01	6.51	6.00
	13.2	12	7.99	7.48	6.97	6.46	5.95
	16.9	15.5	7.93	7.42	6.91	6.40	5.89

Note(1) This data shows average statuses out of those possible to occur in the system control.
(Depending on controls, there may be ranges where the operation is not conducted continuously.)
(2) Symbols are as follows
TC :Total cooling capacity(kW)
SHC :Sensible heat capacity(kW)

Cool mode	Uhi	Hi	Me	Lo
Air flow	20.00	18	16	14
TC	7.74	7.10	6.67	6.25
SHF	0.71	0.70	0.69	0.68

Heat mode	Uhi	Hi	Me	Lo
Air flow	20	18	16	14
Heating capacity	8.72	8.00	7.52	7.04

Model **FDT90KXE6** Cool Mode

Air flow	Ambient air temp. (°CDB)	Indoor air temperature 21 °CDB 14 °CWB TC	21 °CDB 14 °CWB SHC	23 °CDB 16 °CWB TC	23 °CDB 16 °CWB SHC	26 °CDB 18 °CWB TC	26 °CDB 18 °CWB SHC	27 °CDB 19 °CWB TC	27 °CDB 19 °CWB SHC	28 °CDB 20 °CWB TC	28 °CDB 20 °CWB SHC	31 °CDB 22 °CWB TC	31 °CDB 22 °CWB SHC	33 °CDB 24 °CWB TC	33 °CDB 24 °CWB SHC
Uhi	10			8.34	6.76	9.97	7.66	10.78	7.82	11.47	7.92	12.85	8.57	13.34	8.36
	12			8.34	6.76	9.97	7.66	10.78	7.82	11.45	7.91	12.80	8.56	13.28	8.34
	14			8.34	6.76	9.97	7.66	10.78	7.82	11.44	7.91	12.75	8.54	13.22	8.30
	16			8.34	6.76	9.97	7.66	10.78	7.82	11.42	7.90	12.71	8.51	13.17	8.29
	18			8.34	6.76	9.97	7.66	10.78	7.82	11.41	7.90	12.66	8.50	13.11	8.27
	20			8.34	6.76	9.97	7.66	10.78	7.82	11.39	7.89	12.62	8.49	13.05	8.26
	22			8.32	6.75	9.96	7.65	10.78	7.82	11.34	7.87	12.46	8.42	12.87	8.19
30	24			8.31	6.74	9.96	7.65	10.78	7.82	11.29	7.86	12.30	8.35	12.70	8.09
(m^3/min)	26			8.31	6.74	9.91	7.64	10.68	7.79	11.15	7.81	12.10	8.29	12.50	8.03
	28	7.53	6.67	8.30	6.74	9.86	7.62	10.58	7.75	11.02	7.75	11.91	8.18	12.31	7.98
	30	7.53	6.67	8.28	6.73	9.79	7.58	10.48	7.70	10.89	7.70	11.73	8.13	12.12	7.93
	32	7.53	6.67	8.26	6.72	9.71	7.55	10.37	7.66	10.76	7.64	11.55	8.07	11.94	7.86
	34	7.53	6.67	8.23	6.71	9.68	7.54	10.24	7.60	10.59	7.59	11.30	7.98	11.69	7.77
	35	7.53	6.67	8.22	6.71	9.66	7.53	10.17	7.63	10.51	7.54	11.18	7.94	11.57	7.74
	36	7.53	6.67	8.21	6.70	9.59	7.50	10.12	7.56	10.41	7.51	10.98	7.86	11.34	7.66
	38	7.53	6.67	8.19	6.69	9.44	7.43	10.02	7.51	10.20	7.42	10.58	7.72	10.89	7.52
	39	7.53	6.67	8.18	6.69	9.37	7.41	9.97	7.49	10.10	7.39	10.38	7.65	10.67	7.44
	41	7.53	6.67	8.15	6.68	9.09	7.29	9.56	7.33	9.68	7.22	9.92	7.47	10.17	7.26
	43	7.53	6.67	8.12	6.67	8.81	7.17	9.15	7.16	9.25	7.06	9.45	7.31	9.67	7.07

Heat Mode

Air flow	Ambient air temp. DB	Ambient air temp. WB	Indoor air temp. 16 °CDB	18 °CDB	20 °CDB	22 °CDB	24 °CDB
Uhi	-19.8	-20	6.55	6.55	6.55	6.55	6.55
	-17.8	-18	6.98	6.98	6.98	6.98	6.98
	-15.7	-16	7.40	7.40	7.40	7.40	7.40
	-13.7	-14	7.82	7.82	7.82	7.82	7.82
	-11.7	-12	8.24	8.24	8.24	8.24	8.24
	-9.6	-10	8.66	8.66	8.66	8.66	8.66
	-7.5	-8	9.19	9.19	9.19	9.19	9.19
30	-5.5	-6	9.72	9.72	9.72	9.72	9.72
(m^3/min)	-3.4	-4	10.06	10.04	10.03	9.93	9.83
	-1.3	-2	10.40	10.37	10.34	10.14	9.94
	0.8	0	10.96	10.81	10.65	10.27	9.89
	3.9	3	11.89	11.47	11.05	10.42	9.80
	7.0	6	13.00	12.15	11.30	10.51	9.72
	10.1	9	12.91	12.08	11.26	10.45	9.63
	13.2	12	12.83	12.01	11.19	10.37	9.55
	16.9	15.5	12.73	11.91	11.09	10.27	9.45

Air flow	Ambient air temp. (°CDB)	Indoor air temperature 21 °CDB 14 °CWB TC	21 °CDB 14 °CWB SHC	23 °CDB 16 °CWB TC	23 °CDB 16 °CWB SHC	26 °CDB 18 °CWB TC	26 °CDB 18 °CWB SHC	27 °CDB 19 °CWB TC	27 °CDB 19 °CWB SHC	28 °CDB 20 °CWB TC	28 °CDB 20 °CWB SHC	31 °CDB 22 °CWB TC	31 °CDB 22 °CWB SHC	33 °CDB 24 °CWB TC	33 °CDB 24 °CWB SHC
Hi	10			7.38	6.03	8.82	6.82	9.54	6.98	10.15	7.07	11.37	7.64	11.80	7.45
	12			7.38	6.03	8.82	6.82	9.54	6.98	10.14	7.06	11.33	7.63	11.75	7.43
	14			7.38	6.03	8.82	6.82	9.54	6.98	10.12	7.06	11.29	7.61	11.70	7.40
	16			7.38	6.03	8.82	6.82	9.54	6.98	10.11	7.05	11.25	7.59	11.65	7.39
	18			7.38	6.03	8.82	6.82	9.54	6.98	10.09	7.05	11.20	7.57	11.60	7.37
	20			7.38	6.03	8.82	6.82	9.54	6.98	10.08	7.04	11.16	7.56	11.55	7.36
	22			7.37	6.03	8.82	6.82	9.54	6.98	10.03	7.03	11.02	7.50	11.39	7.27
27	24			7.36	6.02	8.81	6.82	9.54	6.98	9.99	7.01	10.88	7.41	11.24	7.23
(m^3/min)	26			7.35	6.02	8.77	6.80	9.45	6.94	9.87	6.96	10.71	7.36	11.06	7.18
	28	6.66	5.95	7.34	6.01	8.73	6.79	9.36	6.91	9.75	6.92	10.54	7.31	10.89	7.13
	30	6.66	5.95	7.33	6.01	8.66	6.76	9.27	6.86	9.64	6.87	10.38	7.26	10.73	7.07
	32	6.66	5.95	7.31	6.00	8.60	6.73	9.18	6.83	9.53	6.83	10.22	7.19	10.56	7.00
	34	6.66	5.95	7.28	5.99	8.57	6.72	9.06	6.77	9.37	6.76	10.00	7.11	10.35	6.95
	35	6.66	5.95	7.27	5.98	8.55	6.71	9.00	6.75	9.30	6.74	9.89	7.08	10.24	6.90
	36	6.66	5.95	7.26	5.98	8.49	6.69	8.96	6.74	9.21	6.69	9.72	7.01	10.04	6.83
	38	6.66	5.95	7.25	5.98	8.36	6.63	8.87	6.71	9.03	6.62	9.36	6.89	9.64	6.70
	39	6.66	5.95	7.24	5.97	8.29	6.60	8.82	6.67	8.94	6.59	9.18	6.81	9.44	6.63
	41	6.66	5.95	7.21	5.96	8.04	6.50	8.46	6.54	8.56	6.45	8.77	6.68	9.00	6.49
	43	6.66	5.95	7.19	5.95	7.80	6.37	8.10	6.39	8.19	6.26	8.37	6.49	8.56	6.32

Air flow	Ambient air temp. DB	Ambient air temp. WB	Indoor air temp. 16 °CDB	18 °CDB	20 °CDB	22 °CDB	24 °CDB
Hi	-19.8	-20	5.80	5.80	5.80	5.80	5.80
	-17.8	-18	6.17	6.17	6.17	6.17	6.17
	-15.7	-16	6.55	6.55	6.55	6.55	6.55
	-13.7	-14	6.92	6.92	6.92	6.92	6.92
	-11.7	-12	7.29	7.29	7.29	7.29	7.29
	-9.6	-10	7.67	7.67	7.67	7.67	7.67
	-7.5	-8	8.13	8.13	8.13	8.13	8.13
27	-5.5	-6	8.60	8.60	8.60	8.60	8.60
(m^3/min)	-3.4	-4	8.90	8.89	8.88	8.79	8.70
	-1.3	-2	9.20	9.18	9.15	8.98	8.80
	0.8	0	9.70	9.56	9.43	9.09	8.75
	3.9	3	10.53	10.15	9.78	9.23	8.68
	7.0	6	11.50	10.75	10.00	9.30	8.60
	10.1	9	11.43	10.69	9.96	9.24	8.53
	13.2	12	11.35	10.63	9.90	9.18	8.45
	16.9	15.5	11.26	10.54	9.81	9.09	8.36

Air flow	Ambient air temp. (°CDB)	Indoor air temperature 21 °CDB 14 °CWB TC	21 °CDB 14 °CWB SHC	23 °CDB 16 °CWB TC	23 °CDB 16 °CWB SHC	26 °CDB 18 °CWB TC	26 °CDB 18 °CWB SHC	27 °CDB 19 °CWB TC	27 °CDB 19 °CWB SHC	28 °CDB 20 °CWB TC	28 °CDB 20 °CWB SHC	31 °CDB 22 °CWB TC	31 °CDB 22 °CWB SHC	33 °CDB 24 °CWB TC	33 °CDB 24 °CWB SHC
Me	10			6.93	5.62	8.29	6.36	8.97	6.49	9.54	6.60	10.69	7.12	11.10	6.94
	12			6.93	5.62	8.29	6.36	8.97	6.49	9.53	6.59	10.65	7.11	11.05	6.92
	14			6.93	5.62	8.29	6.36	8.97	6.49	9.52	6.59	10.61	7.10	11.00	6.91
	16			6.93	5.62	8.29	6.36	8.97	6.49	9.50	6.58	10.57	7.07	10.95	6.88
	18			6.93	5.62	8.29	6.36	8.97	6.49	9.49	6.57	10.53	7.06	10.91	6.87
	20			6.93	5.62	8.29	6.36	8.97	6.49	9.48	6.56	10.49	7.04	10.86	6.85
	22			6.92	5.61	8.29	6.36	8.97	6.49	9.43	6.52	10.36	6.99	10.71	6.80
24	24			6.92	5.61	8.28	6.36	8.97	6.49	9.39	6.51	10.23	6.95	10.56	6.75
(m^3/min)	26			6.91	5.61	8.24	6.34	8.88	6.46	9.28	6.47	10.07	6.88	10.40	6.69
	28	6.26	5.54	6.90	5.60	8.21	6.33	8.80	6.43	9.17	6.43	9.91	6.82	10.24	6.63
	30	6.26	5.54	6.89	5.60	8.14	6.29	8.71	6.40	9.06	6.39	9.75	6.75	10.08	6.59
	32	6.26	5.54	6.87	5.59	8.08	6.27	8.63	6.37	8.95	6.35	9.60	6.71	9.93	6.53
	34	6.26	5.54	6.85	5.58	8.05	6.26	8.52	6.32	8.81	6.29	9.40	6.63	9.72	6.46
	35	6.26	5.54	6.84	5.58	8.04	6.26	8.46	6.26	8.74	6.27	9.30	6.60	9.62	6.43
	36	6.26	5.54	6.83	5.58	7.98	6.23	8.42	6.28	8.66	6.24	9.13	6.53	9.44	6.33
	38	6.26	5.54	6.81	5.57	7.86	6.18	8.33	6.24	8.49	6.17	8.80	6.39	9.06	6.22
	39	6.26	5.54	6.80	5.56	7.79	6.15	8.29	6.22	8.40	6.14	8.63	6.33	8.88	6.17
	41	6.26	5.54	6.78	5.55	7.56	6.05	7.95	6.09	8.05	5.99	8.25	6.21	8.46	6.04
	43	6.26	5.54	6.75	5.54	7.33	5.95	7.61	5.94	7.70	5.86	7.86	6.07	8.04	5.89

Air flow	Ambient air temp. DB	Ambient air temp. WB	Indoor air temp. 16 °CDB	18 °CDB	20 °CDB	22 °CDB	24 °CDB
Me	-19.8	-20	5.45	5.45	5.45	5.45	5.45
	-17.8	-18	5.80	5.80	5.80	5.80	5.80
	-15.7	-16	6.15	6.15	6.15	6.15	6.15
	-13.7	-14	6.50	6.50	6.50	6.50	6.50
	-11.7	-12	6.86	6.86	6.86	6.86	6.86
	-9.6	-10	7.21	7.21	7.21	7.21	7.21
	-7.5	-8	7.65	7.65	7.65	7.65	7.65
24	-5.5	-6	8.08	8.08	8.08	8.08	8.08
(m^3/min)	-3.4	-4	8.37	8.35	8.34	8.26	8.18
	-1.3	-2	8.65	8.62	8.60	8.44	8.27
	0.8	0	9.12	8.99	8.86	8.54	8.23
	3.9	3	9.89	9.54	9.19	8.67	8.15
	7.0	6	10.81	10.11	9.40	8.74	8.08
	10.1	9	10.74	10.05	9.36	8.69	8.01
	13.2	12	10.67	9.99	9.31	8.62	7.94
	16.9	15.5	10.59	9.91	9.22	8.54	7.86

Air flow	Ambient air temp. (°CDB)	Indoor air temperature 21 °CDB 14 °CWB TC	21 °CDB 14 °CWB SHC	23 °CDB 16 °CWB TC	23 °CDB 16 °CWB SHC	26 °CDB 18 °CWB TC	26 °CDB 18 °CWB SHC	27 °CDB 19 °CWB TC	27 °CDB 19 °CWB SHC	28 °CDB 20 °CWB TC	28 °CDB 20 °CWB SHC	31 °CDB 22 °CWB TC	31 °CDB 22 °CWB SHC	33 °CDB 24 °CWB TC	33 °CDB 24 °CWB SHC
Lo	10			6.64	5.10	7.94	5.77	8.59	5.93	9.13	6.02	10.23	6.50	10.62	6.31
	12			6.64	5.10	7.94	5.77	8.59	5.93	9.12	6.01	10.20	6.48	10.58	6.30
	14			6.64	5.10	7.94	5.77	8.59	5.93	9.11	6.01	10.16	6.46	10.53	6.28
	16			6.64	5.10	7.94	5.77	8.59	5.93	9.10	6.00	10.12	6.45	10.49	6.27
	18			6.64	5.10	7.94	5.77	8.59	5.93	9.09	6.00	10.08	6.43	10.44	6.24
	20			6.64	5.10	7.94	5.77	8.59	5.93	9.07	5.99	10.05	6.41	10.40	6.23
	22			6.63	5.09	7.93	5.77	8.59	5.93	9.03	5.98	9.92	6.36	10.25	6.15
20	24			6.62	5.09	7.93	5.77	8.59	5.93	8.99	5.95	9.79	6.32	10.11	6.11
(m^3/min)	26			6.62	5.09	7.89	5.75	8.51	5.90	8.88	5.91	9.64	6.23	9.96	6.07
	28	5.99	5.02	6.61	5.08	7.86	5.74	8.42	5.86	8.78	5.87	9.48	6.18	9.80	6.01
	30	5.99	5.02	6.59	5.08	7.80	5.71	8.34	5.83	8.68	5.82	9.34	6.14	9.65	5.96
	32	5.99	5.02	6.58	5.07	7.74	5.69	8.26	5.77	8.57	5.78	9.20	6.08	9.51	5.91
	34	5.99	5.02	6.56	5.06	7.71	5.68	8.15	5.72	8.44	5.70	9.00	6.00	9.31	5.84
	35	5.99	5.02	6.54	5.05	7.70	5.68	8.10	5.67	8.37	5.68	8.90	5.96	9.21	5.80
	36	5.99	5.02	6.54	5.05	7.64	5.65	8.06	5.69	8.29	5.65	8.74	5.89	9.03	5.73
	38	5.99	5.02	6.52	5.05	7.52	5.60	7.98	5.66	8.13	5.59	8.42	5.78	8.68	5.62
	39	5.99	5.02	6.51	5.04	7.46	5.57	7.94	5.65	8.05	5.56	8.26	5.72	8.50	5.55
	41	5.99	5.02	6.49	5.03	7.24	5.47	7.61	5.50	7.71	5.42	7.90	5.56	8.10	5.40
	43	5.99	5.02	6.47	5.03	7.02	5.37	7.29	5.37	7.37	5.28	7.53	5.44	7.70	5.27

Air flow	Ambient air temp. DB	Ambient air temp. WB	Indoor air temp. 16 °CDB	18 °CDB	20 °CDB	22 °CDB	24 °CDB
Lo	-19.8	-20	5.22	5.22	5.22	5.22	5.22
	-17.8	-18	5.56	5.56	5.56	5.56	5.56
	-15.7	-16	5.89	5.89	5.89	5.89	5.89
	-13.7	-14	6.23	6.23	6.23	6.23	6.23
	-11.7	-12	6.56	6.56	6.56	6.56	6.56
	-9.6	-10	6.90	6.90	6.90	6.90	6.90
	-7.5	-8	7.32	7.32	7.32	7.32	7.32
20	-5.5	-6	7.74	7.74	7.74	7.74	7.74
(m^3/min)	-3.4	-4	8.01	8.00	7.99	7.91	7.83
	-1.3	-2	8.28	8.26	8.24	8.08	7.92
	0.8	0	8.73	8.61	8.48	8.18	7.88
	3.9	3	9.47	9.14	8.80	8.30	7.81
	7.0	6	10.35	9.68	9.00	8.37	7.74
	10.1	9	10.28	9.62	8.97	8.32	7.67
	13.2	12	10.22	9.56	8.91	8.26	7.61
	16.9	15.5	10.14	9.48	8.83	8.18	7.53

Note(1) This data shows average statuses out of those possible to occur in the system control.
(Depending on controls, there may be ranges where the operation is not conducted continuously.)
(2) Symbols are as follows
TC :Total cooling capacity(kW)
SHC :Sensible heat capacity(kW)

Cool mode	Uhi	Hi	Me	Lo
Air flow	30.00	27	24	20
TC	10.17	9.00	8.46	8.10
SHF	0.75	0.75	0.74	0.70

Heat mode	Uhi	Hi	Me	Lo
Air flow	30	27	24	20
Heating capacity	11.30	10.00	9.40	9.00

Model **FDT112KXE6** Cool Mode

Air flow	Ambient air temp. (°CDB)	Indoor air temperature 21 °CDB 14 °CWB TC	21 °CDB 14 °CWB SHC	23 °CDB 16 °CWB TC	23 °CDB 16 °CWB SHC	26 °CDB 18 °CWB TC	26 °CDB 18 °CWB SHC	27 °CDB 19 °CWB TC	27 °CDB 19 °CWB SHC	28 °CDB 20 °CWB TC	28 °CDB 20 °CWB SHC	31 °CDB 22 °CWB TC	31 °CDB 22 °CWB SHC	33 °CDB 24 °CWB TC	33 °CDB 24 °CWB SHC
Uhi 30 (m³/min)	10			10.19	7.65	12.18	8.69	13.18	8.93	14.02	9.06	15.70	9.77	16.30	9.50
	12			10.19	7.65	12.18	8.69	13.18	8.93	14.00	9.05	15.65	9.75	16.23	9.46
	14			10.19	7.65	12.18	8.69	13.18	8.93	13.98	9.04	15.59	9.73	16.16	9.44
	16			10.19	7.65	12.18	8.69	13.18	8.93	13.96	9.04	15.53	9.70	16.09	9.42
	18			10.19	7.65	12.18	8.69	13.18	8.93	13.94	9.03	15.48	9.68	16.02	9.39
	20			10.19	7.65	12.18	8.69	13.18	8.93	13.92	9.02	15.42	9.66	15.95	9.37
	22			10.17	7.64	12.18	8.69	13.18	8.93	13.86	9.00	15.22	9.56	15.73	9.28
	24			10.16	7.64	12.17	8.68	13.18	8.93	13.79	8.96	15.03	9.49	15.52	9.16
	26			10.15	7.64	12.11	8.66	13.05	8.86	13.63	8.89	14.79	9.39	15.28	9.09
	28	9.20	7.52	10.14	7.63	12.06	8.62	12.93	8.80	13.47	8.82	14.55	9.27	15.04	9.02
	30	9.20	7.52	10.12	7.62	11.96	8.59	12.80	8.76	13.31	8.76	14.33	9.20	14.82	8.94
	32	9.20	7.52	10.09	7.61	11.87	8.54	12.68	8.70	13.16	8.69	14.11	9.11	14.59	8.85
	34	9.20	7.52	10.06	7.60	11.83	8.52	12.51	8.62	12.95	8.60	13.81	9.00	14.29	8.73
	35	9.20	7.52	10.04	7.59	11.81	8.49	12.43	8.58	12.84	8.55	13.66	8.93	14.14	8.69
	36	9.20	7.52	10.03	7.58	11.72	8.45	12.37	8.55	12.72	8.51	13.42	8.84	13.86	8.57
	38	9.20	7.52	10.01	7.58	11.54	8.38	12.24	8.50	12.47	8.39	12.93	8.65	13.31	8.35
	39	9.20	7.52	9.99	7.57	11.45	8.35	12.18	8.47	12.35	8.32	12.68	8.54	13.04	8.27
	41	9.20	7.52	9.96	7.54	11.11	8.20	11.68	8.26	11.83	8.12	12.12	8.33	12.43	8.08
	43	9.20	7.52	9.92	7.53	10.77	8.05	11.19	8.05	11.31	7.91	11.56	8.13	11.82	7.88

Heat Mode

Air flow	Ambient air temp. DB	Ambient air temp. WB	Indoor air temp. 16 °CDB	18 °CDB	20 °CDB	22 °CDB	24 °CDB
Uhi 30 (m³/min)	-19.8	-20	8.05	8.05	8.05	8.05	8.05
	-17.8	-18	8.57	8.57	8.57	8.57	8.57
	-15.7	-16	9.09	9.09	9.09	9.09	9.09
	-13.7	-14	9.60	9.60	9.60	9.60	9.60
	-11.7	-12	10.12	10.12	10.12	10.12	10.12
	-9.6	-10	10.64	10.64	10.64	10.64	10.64
	-7.5	-8	11.29	11.29	11.29	11.29	11.29
	-5.5	-6	11.94	11.94	11.94	11.94	11.94
	-3.4	-4	12.35	12.34	12.32	12.20	12.08
	-1.3	-2	12.77	12.73	12.70	12.46	12.21
	0.8	0	13.46	13.27	13.08	12.61	12.15
	3.9	3	14.61	14.09	13.57	12.80	12.04
	7.0	6	15.96	14.92	13.88	12.91	11.94
	10.1	9	15.86	14.84	13.83	12.83	11.83
	13.2	12	15.75	14.75	13.74	12.73	11.73
	16.9	15.5	15.63	14.63	13.62	12.61	11.61

Air flow	Ambient air temp. (°CDB)	Indoor air temperature 21 °CDB 14 °CWB TC	21 °CDB 14 °CWB SHC	23 °CDB 16 °CWB TC	23 °CDB 16 °CWB SHC	26 °CDB 18 °CWB TC	26 °CDB 18 °CWB SHC	27 °CDB 19 °CWB TC	27 °CDB 19 °CWB SHC	28 °CDB 20 °CWB TC	28 °CDB 20 °CWB SHC	31 °CDB 22 °CWB TC	31 °CDB 22 °CWB SHC	33 °CDB 24 °CWB TC	33 °CDB 24 °CWB SHC
Hi 27 (m³/min)	10			9.18	6.90	10.97	7.82	11.87	8.04	12.63	8.16	14.15	8.80	14.69	8.56
	12			9.18	6.90	10.97	7.82	11.87	8.04	12.61	8.15	14.10	8.78	14.63	8.52
	14			9.18	6.90	10.97	7.82	11.87	8.04	12.60	8.15	14.05	8.76	14.56	8.50
	16			9.18	6.90	10.97	7.82	11.87	8.04	12.58	8.14	14.00	8.73	14.50	8.49
	18			9.18	6.90	10.97	7.82	11.87	8.04	12.56	8.13	13.94	8.71	14.44	8.45
	20			9.18	6.90	10.97	7.82	11.87	8.04	12.55	8.13	13.89	8.70	14.37	8.43
	22			9.17	6.89	10.97	7.82	11.87	8.04	12.49	8.11	13.72	8.63	14.18	8.36
	24			9.15	6.88	10.97	7.82	11.87	8.04	12.43	8.07	13.54	8.54	13.98	8.25
	26			9.15	6.88	10.92	7.80	11.76	7.98	12.28	8.00	13.33	8.46	13.77	8.18
	28	8.29	6.77	9.14	6.87	10.86	7.76	11.65	7.93	12.14	7.95	13.11	8.35	13.55	8.12
	30	8.29	6.77	9.12	6.87	10.78	7.73	11.54	7.89	12.00	7.89	12.91	8.28	13.35	8.05
	32	8.29	6.77	9.09	6.85	10.70	7.69	11.42	7.83	11.85	7.83	12.71	8.20	13.15	7.97
	34	8.29	6.77	9.06	6.84	10.66	7.67	11.27	7.76	11.66	7.74	12.45	8.10	12.87	7.86
	35	8.29	6.77	9.05	6.84	10.64	7.64	11.20	7.73	11.57	7.70	12.31	8.05	12.74	7.82
	36	8.29	6.77	9.04	6.83	10.56	7.61	11.14	7.70	11.46	7.66	12.09	7.96	12.49	7.74
	38	8.29	6.77	9.02	6.82	10.40	7.55	11.03	7.66	11.24	7.56	11.65	7.79	12.00	7.52
	39	8.29	6.77	9.00	6.82	10.32	7.52	10.98	7.64	11.13	7.49	11.43	7.71	11.75	7.45
	41	8.29	6.77	8.97	6.80	10.01	7.39	10.53	7.44	10.66	7.31	10.92	7.50	11.20	7.28
	43	8.29	6.77	8.94	6.78	9.70	7.24	10.08	7.25	10.19	7.12	10.41	7.31	10.65	7.09

Air flow	Ambient air temp. DB	Ambient air temp. WB	Indoor air temp. 16 °CDB	18 °CDB	20 °CDB	22 °CDB	24 °CDB
Hi 27 (m³/min)	-19.8	-20	7.25	7.25	7.25	7.25	7.25
	-17.8	-18	7.72	7.72	7.72	7.72	7.72
	-15.7	-16	8.18	8.18	8.18	8.18	8.18
	-13.7	-14	8.65	8.65	8.65	8.65	8.65
	-11.7	-12	9.12	9.12	9.12	9.12	9.12
	-9.6	-10	9.58	9.58	9.58	9.58	9.58
	-7.5	-8	10.17	10.17	10.17	10.17	10.17
	-5.5	-6	10.75	10.75	10.75	10.75	10.75
	-3.4	-4	11.13	11.11	11.09	10.98	10.88
	-1.3	-2	11.50	11.47	11.44	11.22	11.00
	0.8	0	12.13	11.95	11.78	11.36	10.94
	3.9	3	13.16	12.69	12.22	11.53	10.84
	7.0	6	14.38	13.44	12.50	11.63	10.75
	10.1	9	14.28	13.37	12.45	11.55	10.66
	13.2	12	14.19	13.28	12.38	11.47	10.56
	16.9	15.5	14.08	13.17	12.27	11.36	10.45

Air flow	Ambient air temp. (°CDB)	Indoor air temperature 21 °CDB 14 °CWB TC	21 °CDB 14 °CWB SHC	23 °CDB 16 °CWB TC	23 °CDB 16 °CWB SHC	26 °CDB 18 °CWB TC	26 °CDB 18 °CWB SHC	27 °CDB 19 °CWB TC	27 °CDB 19 °CWB SHC	28 °CDB 20 °CWB TC	28 °CDB 20 °CWB SHC	31 °CDB 22 °CWB TC	31 °CDB 22 °CWB SHC	33 °CDB 24 °CWB TC	33 °CDB 24 °CWB SHC
Me 24 (m³/min)	10			8.54	6.34	10.21	7.19	11.05	7.40	11.75	7.52	13.16	8.10	13.67	7.87
	12			8.54	6.34	10.21	7.19	11.05	7.40	11.74	7.52	13.12	8.09	13.61	7.85
	14			8.54	6.34	10.21	7.19	11.05	7.40	11.72	7.51	13.07	8.06	13.55	7.83
	16			8.54	6.34	10.21	7.19	11.05	7.40	11.70	7.50	13.02	8.04	13.49	7.80
	18			8.54	6.34	10.21	7.19	11.05	7.40	11.69	7.50	12.97	8.03	13.43	7.78
	20			8.54	6.34	10.21	7.19	11.05	7.40	11.67	7.48	12.93	8.00	13.37	7.75
	22			8.53	6.33	10.21	7.19	11.05	7.40	11.62	7.46	12.76	7.93	13.19	7.69
	24			8.52	6.33	10.20	7.19	11.05	7.40	11.56	7.44	12.60	7.87	13.01	7.62
	26			8.51	6.32	10.15	7.17	10.94	7.34	11.43	7.38	12.40	7.77	12.81	7.52
	28	7.71	6.22	8.50	6.32	10.11	7.14	10.84	7.30	11.29	7.32	12.20	7.67	12.61	7.46
	30	7.71	6.22	8.48	6.29	10.03	7.09	10.73	7.25	11.16	7.26	12.01	7.61	12.42	7.39
	32	7.71	6.22	8.46	6.28	9.95	7.06	10.63	7.20	11.03	7.20	11.83	7.55	12.23	7.32
	34	7.71	6.22	8.43	6.27	9.92	7.05	10.49	7.14	10.85	7.12	11.58	7.44	11.98	7.23
	35	7.71	6.22	8.42	6.26	9.90	7.04	10.42	7.09	10.76	7.08	11.45	7.39	11.85	7.18
	36	7.71	6.22	8.41	6.26	9.82	7.01	10.37	7.08	10.66	7.04	11.25	7.31	11.62	7.09
	38	7.71	6.22	8.39	6.25	9.68	6.95	10.26	7.02	10.45	6.93	10.84	7.15	11.16	6.90
	39	7.71	6.22	8.38	6.25	9.60	6.91	10.21	7.00	10.35	6.90	10.63	7.03	10.93	6.83
	41	7.71	6.22	8.35	6.23	9.31	6.77	9.79	6.83	9.92	6.72	10.16	6.88	10.42	6.66
	43	7.71	6.22	8.32	6.22	9.02	6.65	9.38	6.66	9.48	6.54	9.69	6.71	9.91	6.48

Air flow	Ambient air temp. DB	Ambient air temp. WB	Indoor air temp. 16 °CDB	18 °CDB	20 °CDB	22 °CDB	24 °CDB
Me 24 (m³/min)	-19.8	-20	6.75	6.75	6.75	6.75	6.75
	-17.8	-18	7.18	7.18	7.18	7.18	7.18
	-15.7	-16	7.61	7.61	7.61	7.61	7.61
	-13.7	-14	8.05	8.05	8.05	8.05	8.05
	-11.7	-12	8.48	8.48	8.48	8.48	8.48
	-9.6	-10	8.92	8.92	8.92	8.92	8.92
	-7.5	-8	9.46	9.46	9.46	9.46	9.46
	-5.5	-6	10.00	10.00	10.00	10.00	10.00
	-3.4	-4	10.35	10.34	10.32	10.22	10.12
	-1.3	-2	10.70	10.67	10.64	10.44	10.23
	0.8	0	11.28	11.12	10.96	10.57	10.18
	3.9	3	12.24	11.80	11.37	10.73	10.09
	7.0	6	13.37	12.50	11.63	10.82	10.00
	10.1	9	13.29	12.44	11.59	10.75	9.91
	13.2	12	13.20	12.36	11.51	10.67	9.83
	16.9	15.5	13.10	12.26	11.41	10.57	9.73

Air flow	Ambient air temp. (°CDB)	Indoor air temperature 21 °CDB 14 °CWB TC	21 °CDB 14 °CWB SHC	23 °CDB 16 °CWB TC	23 °CDB 16 °CWB SHC	26 °CDB 18 °CWB TC	26 °CDB 18 °CWB SHC	27 °CDB 19 °CWB TC	27 °CDB 19 °CWB SHC	28 °CDB 20 °CWB TC	28 °CDB 20 °CWB SHC	31 °CDB 22 °CWB TC	31 °CDB 22 °CWB SHC	33 °CDB 24 °CWB TC	33 °CDB 24 °CWB SHC
Lo 20 (m³/min)	10			7.98	5.72	9.54	6.51	10.32	6.71	10.98	6.84	12.30	7.37	12.78	7.15
	12			7.98	5.72	9.54	6.51	10.32	6.71	10.97	6.83	12.26	7.34	12.72	7.12
	14			7.98	5.72	9.54	6.51	10.32	6.71	10.95	6.82	12.22	7.33	12.67	7.10
	16			7.98	5.72	9.54	6.51	10.32	6.71	10.94	6.82	12.17	7.30	12.61	7.08
	18			7.98	5.72	9.54	6.51	10.32	6.71	10.92	6.80	12.13	7.29	12.56	7.06
	20			7.98	5.72	9.54	6.51	10.32	6.71	10.91	6.80	12.08	7.27	12.50	7.03
	22			7.97	5.72	9.54	6.51	10.32	6.71	10.86	6.78	11.93	7.20	12.33	6.95
	24			7.96	5.71	9.54	6.51	10.32	6.71	10.81	6.75	11.78	7.14	12.16	6.89
	26			7.95	5.71	9.49	6.49	10.23	6.66	10.68	6.69	11.59	7.04	11.97	6.81
	28	7.21	5.61	7.95	5.71	9.45	6.46	10.13	6.61	10.55	6.62	11.40	6.97	11.79	6.75
	30	7.21	5.61	7.93	5.70	9.37	6.43	10.03	6.57	10.43	6.57	11.23	6.89	11.61	6.67
	32	7.21	5.61	7.91	5.69	9.30	6.39	9.93	6.53	10.31	6.52	11.06	6.82	11.43	6.60
	34	7.21	5.61	7.88	5.68	9.27	6.38	9.80	6.46	10.14	6.44	10.82	6.72	11.20	6.49
	35	7.21	5.61	7.87	5.67	9.25	6.37	9.74	6.43	10.06	6.41	10.71	6.67	11.08	6.45
	36	7.21	5.61	7.86	5.67	9.18	6.33	9.69	6.41	9.97	6.37	10.51	6.57	10.86	6.37
	38	7.21	5.61	7.84	5.65	9.04	6.27	9.59	6.37	9.77	6.27	10.13	6.42	10.43	6.21
	39	7.21	5.61	7.83	5.65	8.97	6.23	9.55	6.34	9.68	6.24	9.94	6.35	10.22	6.14
	41	7.21	5.61	7.80	5.63	8.70	6.10	9.16	6.16	9.27	6.04	9.50	6.17	9.74	5.94
	43	7.21	5.61	7.78	5.62	8.44	5.98	8.77	5.98	8.86	5.87	9.05	5.98	9.26	5.78

Air flow	Ambient air temp. DB	Ambient air temp. WB	Indoor air temp. 16 °CDB	18 °CDB	20 °CDB	22 °CDB	24 °CDB
Lo 20 (m³/min)	-19.8	-20	6.31	6.31	6.31	6.31	6.31
	-17.8	-18	6.72	6.72	6.72	6.72	6.72
	-15.7	-16	7.12	7.12	7.12	7.12	7.12
	-13.7	-14	7.53	7.53	7.53	7.53	7.53
	-11.7	-12	7.94	7.94	7.94	7.94	7.94
	-9.6	-10	8.34	8.34	8.34	8.34	8.34
	-7.5	-8	8.85	8.85	8.85	8.85	8.85
	-5.5	-6	9.36	9.36	9.36	9.36	9.36
	-3.4	-4	9.68	9.67	9.66	9.56	9.47
	-1.3	-2	10.01	9.98	9.96	9.76	9.57
	0.8	0	10.55	10.40	10.25	9.89	9.52
	3.9	3	11.45	11.04	10.64	10.04	9.44
	7.0	6	12.51	11.70	10.88	10.12	9.36
	10.1	9	12.43	11.63	10.84	10.06	9.28
	13.2	12	12.35	11.56	10.77	9.98	9.19
	16.9	15.5	12.25	11.46	10.68	9.89	9.10

Note(1) This data shows average statuses out of those possible to occur in the system control.
(Depending on controls, there may be ranges where the operation is not conducted continuously.)

(2) Symbols are as follows
TC :Total cooling capacity(kW)
SHC :Sensible heat capacity(kW)

Cool mode	Uhi	Hi	Me	Lo
Air flow	30.00	27	24	20
TC	12.43	11.20	10.42	9.74
SHF	0.69	0.69	0.68	0.66

Heat mode	Uhi	Hi	Me	Lo
Air flow	30	27	24	20
Heating capacity	13.88	12.50	11.63	10.88

Model **FDT140KXE6** Cool Mode

Air flow	Ambient air temp. (°CDB)	Indoor air temperature 21 °CDB 14 °CWB TC	21 °CDB 14 °CWB SHC	23 °CDB 16 °CWB TC	23 °CDB 16 °CWB SHC	26 °CDB 18 °CWB TC	26 °CDB 18 °CWB SHC	27 °CDB 19 °CWB TC	27 °CDB 19 °CWB SHC	28 °CDB 20 °CWB TC	28 °CDB 20 °CWB SHC	31 °CDB 22 °CWB TC	31 °CDB 22 °CWB SHC	33 °CDB 24 °CWB TC	33 °CDB 24 °CWB SHC
Uhi	10			12.51	9.26	14.95	10.51	16.18	10.81	17.21	10.97	19.28	11.84	20.02	11.50
	12			12.51	9.26	14.95	10.51	16.18	10.81	17.19	10.96	19.21	11.81	19.93	11.47
	14			12.51	9.26	14.95	10.51	16.18	10.81	17.16	10.95	19.14	11.79	19.84	11.44
	16			12.51	9.26	14.95	10.51	16.18	10.81	17.14	10.94	19.07	11.76	19.76	11.37
	18			12.51	9.26	14.95	10.51	16.18	10.81	17.12	10.93	19.00	11.72	19.67	11.34
	20			12.51	9.26	14.95	10.51	16.18	10.81	17.09	10.92	18.93	11.70	19.58	11.31
	22			12.49	9.25	14.95	10.51	16.18	10.81	17.01	10.89	18.69	11.56	19.32	11.22
33	24			12.47	9.24	14.94	10.50	16.18	10.81	16.93	10.86	18.45	11.47	19.05	11.13
(m³/min)	26			12.46	9.24	14.87	10.48	16.02	10.74	16.73	10.78	18.16	11.37	18.76	11.02
	28	11.29	9.09	12.45	9.24	14.80	10.45	15.87	10.66	16.54	10.69	17.87	11.25	18.46	10.91
	30	11.29	9.09	12.42	9.22	14.69	10.39	15.72	10.60	16.34	10.61	17.60	11.14	18.19	10.80
	32	11.29	9.09	12.39	9.21	14.57	10.34	15.57	10.53	16.15	10.52	17.32	11.02	17.91	10.70
	34	11.29	9.09	12.35	9.19	14.52	10.31	15.36	10.43	15.89	10.41	16.96	10.88	17.54	10.56
	35	11.29	9.09	12.33	9.15	14.50	10.31	15.26	10.38	15.76	10.36	16.77	10.79	17.36	10.48
	36	11.29	9.09	12.31	9.14	14.39	10.25	15.18	10.36	15.61	10.28	16.47	10.67	17.02	10.36
	38	11.29	9.09	12.28	9.13	14.17	10.15	15.03	10.28	15.31	10.15	15.87	10.45	16.35	10.10
	39	11.29	9.09	12.27	9.13	14.06	10.10	14.95	10.25	15.16	10.10	15.57	10.29	16.01	9.99
	41	11.29	9.09	12.23	9.11	13.64	9.91	14.34	9.98	14.52	9.82	14.88	10.06	15.26	9.74
	43	11.29	9.09	12.18	9.09	13.22	9.71	13.73	9.69	13.88	9.54	14.19	9.79	14.51	9.47

Heat Mode

Air flow	Ambient air temp. DB	Ambient air temp. WB	Indoor air temp. 16 °CDB	18 °CDB	20 °CDB	22 °CDB	24 °CDB
Uhi	-19.8	-20	10.12	10.12	10.12	10.12	10.12
	-17.8	-18	10.77	10.77	10.77	10.77	10.77
	-15.7	-16	11.42	11.42	11.42	11.42	11.42
	-13.7	-14	12.07	12.07	12.07	12.07	12.07
	-11.7	-12	12.72	12.72	12.72	12.72	12.72
	-9.6	-10	13.37	13.37	13.37	13.37	13.37
	-7.5	-8	14.18	14.18	14.18	14.18	14.18
33	-5.5	-6	15.00	15.00	15.00	15.00	15.00
(m³/min)	-3.4	-4	15.52	15.50	15.48	15.33	15.17
	-1.3	-2	16.04	16.00	15.96	15.65	15.35
	0.8	0	16.92	16.68	16.44	15.85	15.26
	3.9	3	18.36	17.70	17.05	16.09	15.13
	7.0	6	20.06	18.75	17.44	16.22	15.00
	10.1	9	19.93	18.65	17.37	16.12	14.87
	13.2	12	19.79	18.53	17.27	16.00	14.74
	16.9	15.5	19.64	18.38	17.11	15.85	14.58

Air flow	Ambient air temp. (°CDB)	Indoor air temperature 21 °CDB 14 °CWB TC	21 °CDB 14 °CWB SHC	23 °CDB 16 °CWB TC	23 °CDB 16 °CWB SHC	26 °CDB 18 °CWB TC	26 °CDB 18 °CWB SHC	27 °CDB 19 °CWB TC	27 °CDB 19 °CWB SHC	28 °CDB 20 °CWB TC	28 °CDB 20 °CWB SHC	31 °CDB 22 °CWB TC	31 °CDB 22 °CWB SHC	33 °CDB 24 °CWB TC	33 °CDB 24 °CWB SHC
Hi	10			11.48	8.51	13.72	9.66	14.84	9.92	15.79	10.09	17.69	10.86	18.36	10.56
	12			11.48	8.51	13.72	9.66	14.84	9.92	15.77	10.09	17.62	10.83	18.28	10.53
	14			11.48	8.51	13.72	9.66	14.84	9.92	15.75	10.06	17.56	10.81	18.20	10.49
	16			11.48	8.51	13.72	9.66	14.84	9.92	15.72	10.05	17.49	10.78	18.13	10.47
	18			11.48	8.51	13.72	9.66	14.84	9.92	15.70	10.04	17.43	10.76	18.05	10.44
	20			11.48	8.51	13.72	9.66	14.84	9.92	15.68	10.04	17.37	10.74	17.97	10.40
	22			11.46	8.50	13.71	9.65	14.84	9.92	15.61	10.01	17.15	10.64	17.72	10.32
30	24			11.44	8.49	13.71	9.65	14.84	9.92	15.54	9.98	16.93	10.55	17.48	10.22
(m³/min)	26			11.43	8.48	13.64	9.61	14.70	9.86	15.35	9.89	16.66	10.44	17.21	10.12
	28	10.36	8.35	11.42	8.48	13.58	9.58	14.56	9.79	15.17	9.81	16.39	10.32	16.94	10.01
	30	10.36	8.35	11.40	8.47	13.48	9.52	14.42	9.73	14.99	9.74	16.14	10.22	16.69	9.91
	32	10.36	8.35	11.37	8.46	13.37	9.47	14.28	9.66	14.82	9.66	15.89	10.11	16.43	9.82
	34	10.36	8.35	11.33	8.44	13.32	9.45	14.09	9.58	14.58	9.55	15.56	9.98	16.09	9.65
	35	10.36	8.35	11.31	8.43	13.30	9.44	14.00	9.52	14.46	9.50	15.39	9.92	15.92	9.60
	36	10.36	8.35	11.30	8.43	13.20	9.40	13.93	9.50	14.32	9.43	15.11	9.78	15.61	9.50
	38	10.36	8.35	11.27	8.41	13.00	9.31	13.79	9.42	14.05	9.30	14.56	9.58	15.00	9.29
	39	10.36	8.35	11.26	8.40	12.90	9.27	13.72	9.39	13.91	9.25	14.28	9.47	14.69	9.18
	41	10.36	8.35	11.22	8.38	12.51	9.10	13.16	9.17	13.32	9.01	13.65	9.22	14.00	8.93
	43	10.36	8.35	11.18	8.36	12.13	8.93	12.60	8.92	12.74	8.78	13.02	8.99	13.31	8.70

Air flow	Ambient air temp. DB	Ambient air temp. WB	Indoor air temp. 16 °CDB	18 °CDB	20 °CDB	22 °CDB	24 °CDB
Hi	-19.8	-20	9.28	9.28	9.28	9.28	9.28
	-17.8	-18	9.88	9.88	9.88	9.88	9.88
	-15.7	-16	10.47	10.47	10.47	10.47	10.47
	-13.7	-14	11.07	11.07	11.07	11.07	11.07
	-11.7	-12	11.67	11.67	11.67	11.67	11.67
	-9.6	-10	12.27	12.27	12.27	12.27	12.27
	-7.5	-8	13.01	13.01	13.01	13.01	13.01
30	-5.5	-6	13.76	13.76	13.76	13.76	13.76
(m³/min)	-3.4	-4	14.24	14.22	14.20	14.06	13.92
	-1.3	-2	14.72	14.68	14.64	14.36	14.08
	0.8	0	15.52	15.30	15.08	14.54	14.00
	3.9	3	16.84	16.24	15.64	14.76	13.88
	7.0	6	18.40	17.20	16.00	14.88	13.76
	10.1	9	18.28	17.11	15.94	14.79	13.64
	13.2	12	18.16	17.00	15.84	14.68	13.52
	16.9	15.5	18.02	16.86	15.70	14.54	13.38

Air flow	Ambient air temp. (°CDB)	Indoor air temperature 21 °CDB 14 °CWB TC	21 °CDB 14 °CWB SHC	23 °CDB 16 °CWB TC	23 °CDB 16 °CWB SHC	26 °CDB 18 °CWB TC	26 °CDB 18 °CWB SHC	27 °CDB 19 °CWB TC	27 °CDB 19 °CWB SHC	28 °CDB 20 °CWB TC	28 °CDB 20 °CWB SHC	31 °CDB 22 °CWB TC	31 °CDB 22 °CWB SHC	33 °CDB 24 °CWB TC	33 °CDB 24 °CWB SHC
Me	10			10.56	7.71	12.62	8.75	13.65	9.01	14.53	9.17	16.27	9.86	16.89	9.59
	12			10.56	7.71	12.62	8.75	13.65	9.01	14.51	9.17	16.21	9.84	16.82	9.57
	14			10.56	7.71	12.62	8.75	13.65	9.01	14.49	9.14	16.15	9.82	16.75	9.53
	16			10.56	7.71	12.62	8.75	13.65	9.01	14.47	9.14	16.09	9.79	16.68	9.50
	18			10.56	7.71	12.62	8.75	13.65	9.01	14.45	9.13	16.04	9.78	16.60	9.47
	20			10.56	7.71	12.62	8.75	13.65	9.01	14.43	9.12	15.98	9.75	16.53	9.44
	22			10.54	7.70	12.62	8.75	13.65	9.01	14.36	9.09	15.77	9.66	16.30	9.35
27	24			10.53	7.69	12.61	8.75	13.65	9.01	14.29	9.05	15.57	9.57	16.08	9.27
(m³/min)	26			10.52	7.69	12.55	8.70	13.52	8.94	14.12	8.99	15.33	9.47	15.83	9.17
	28	9.53	7.56	10.51	7.68	12.49	8.67	13.40	8.90	13.96	8.91	15.08	9.36	15.58	9.06
	30	9.53	7.56	10.48	7.67	12.40	8.63	13.27	8.83	13.79	8.83	14.85	9.27	15.35	8.95
	32	9.53	7.56	10.46	7.66	12.30	8.59	13.14	8.77	13.63	8.76	14.62	9.17	15.12	8.87
	34	9.53	7.56	10.42	7.64	12.26	8.58	12.97	8.68	13.41	8.66	14.31	9.02	14.81	8.77
	35	9.53	7.56	10.41	7.64	12.24	8.57	12.88	8.63	13.31	8.62	14.16	8.97	14.65	8.71
	36	9.53	7.56	10.39	7.62	12.14	8.53	12.82	8.60	13.18	8.54	13.90	8.87	14.37	8.61
	38	9.53	7.56	10.37	7.61	11.96	8.44	12.69	8.55	12.92	8.44	13.40	8.67	13.80	8.40
	39	9.53	7.56	10.36	7.61	11.87	8.40	12.62	8.52	12.80	8.39	13.14	8.56	13.51	8.29
	41	9.53	7.56	10.32	7.59	11.51	8.23	12.11	8.31	12.26	8.16	12.56	8.34	12.88	8.03
	43	9.53	7.56	10.28	7.57	11.16	8.08	11.59	8.07	11.72	7.93	11.97	8.08	12.25	7.83

Air flow	Ambient air temp. DB	Ambient air temp. WB	Indoor air temp. 16 °CDB	18 °CDB	20 °CDB	22 °CDB	24 °CDB
Me	-19.8	-20	8.54	8.54	8.54	8.54	8.54
	-17.8	-18	9.09	9.09	9.09	9.09	9.09
	-15.7	-16	9.64	9.64	9.64	9.64	9.64
	-13.7	-14	10.19	10.19	10.19	10.19	10.19
	-11.7	-12	10.74	10.74	10.74	10.74	10.74
	-9.6	-10	11.29	11.29	11.29	11.29	11.29
	-7.5	-8	11.97	11.97	11.97	11.97	11.97
27	-5.5	-6	12.66	12.66	12.66	12.66	12.66
(m³/min)	-3.4	-4	13.10	13.08	13.06	12.94	12.81
	-1.3	-2	13.54	13.51	13.47	13.21	12.95
	0.8	0	14.28	14.08	13.87	13.38	12.88
	3.9	3	15.49	14.94	14.39	13.58	12.77
	7.0	6	16.93	15.82	14.72	13.69	12.66
	10.1	9	16.82	15.74	14.66	13.61	12.55
	13.2	12	16.71	15.64	14.57	13.51	12.44
	16.9	15.5	16.58	15.51	14.44	13.38	12.31

Air flow	Ambient air temp. (°CDB)	Indoor air temperature 21 °CDB 14 °CWB TC	21 °CDB 14 °CWB SHC	23 °CDB 16 °CWB TC	23 °CDB 16 °CWB SHC	26 °CDB 18 °CWB TC	26 °CDB 18 °CWB SHC	27 °CDB 19 °CWB TC	27 °CDB 19 °CWB SHC	28 °CDB 20 °CWB TC	28 °CDB 20 °CWB SHC	31 °CDB 22 °CWB TC	31 °CDB 22 °CWB SHC	33 °CDB 24 °CWB TC	33 °CDB 24 °CWB SHC
Lo	10			9.64	6.92	11.52	7.87	12.47	8.11	13.26	8.27	14.86	8.92	15.43	8.64
	12			9.64	6.92	11.52	7.87	12.47	8.11	13.24	8.26	14.80	8.88	15.36	8.62
	14			9.64	6.92	11.52	7.87	12.47	8.11	13.23	8.26	14.75	8.86	15.29	8.58
	16			9.64	6.92	11.52	7.87	12.47	8.11	13.21	8.25	14.69	8.84	15.23	8.56
	18			9.64	6.92	11.52	7.87	12.47	8.11	13.19	8.23	14.64	8.81	15.16	8.54
	20			9.64	6.92	11.52	7.87	12.47	8.11	13.17	8.22	14.59	8.79	15.09	8.50
	22			9.63	6.91	11.52	7.87	12.47	8.11	13.11	8.20	14.40	8.71	14.89	8.42
23	24			9.61	6.90	11.51	7.87	12.47	8.11	13.05	8.17	14.22	8.63	14.68	8.34
(m³/min)	26			9.60	6.90	11.46	7.85	12.35	8.06	12.90	8.08	13.99	8.52	14.46	8.23
	28	8.70	6.79	9.60	6.90	11.41	7.82	12.23	8.01	12.74	8.02	13.77	8.43	14.23	8.15
	30	8.70	6.79	9.57	6.88	11.32	7.78	12.11	7.95	12.60	7.96	13.56	8.32	14.02	8.08
	32	8.70	6.79	9.55	6.88	11.23	7.74	12.00	7.90	12.45	7.89	13.35	8.25	13.80	7.99
	34	8.70	6.79	9.52	6.86	11.19	7.72	11.84	7.82	12.25	7.80	13.07	8.13	13.52	7.87
	35	8.70	6.79	9.50	6.85	11.17	7.71	11.76	7.76	12.15	7.76	12.93	8.07	13.38	7.83
	36	8.70	6.79	9.49	6.85	11.09	7.67	11.70	7.76	12.03	7.70	12.69	7.97	13.12	7.72
	38	8.70	6.79	9.47	6.84	10.92	7.58	11.58	7.70	11.80	7.60	12.23	7.78	12.60	7.53
	39	8.70	6.79	9.46	6.83	10.83	7.55	11.52	7.67	11.68	7.55	12.00	7.68	12.34	7.40
	41	8.70	6.79	9.42	6.82	10.51	7.40	11.05	7.46	11.19	7.33	11.47	7.46	11.76	7.22
	43	8.70	6.79	9.39	6.80	10.19	7.23	10.58	7.22	10.70	7.10	10.93	7.25	11.18	7.01

Air flow	Ambient air temp. DB	Ambient air temp. WB	Indoor air temp. 16 °CDB	18 °CDB	20 °CDB	22 °CDB	24 °CDB
Lo	-19.8	-20	7.80	7.80	7.80	7.80	7.80
	-17.8	-18	8.30	8.30	8.30	8.30	8.30
	-15.7	-16	8.80	8.80	8.80	8.80	8.80
	-13.7	-14	9.30	9.30	9.30	9.30	9.30
	-11.7	-12	9.80	9.80	9.80	9.80	9.80
	-9.6	-10	10.30	10.30	10.30	10.30	10.30
	-7.5	-8	10.93	10.93	10.93	10.93	10.93
23	-5.5	-6	11.56	11.56	11.56	11.56	11.56
(m³/min)	-3.4	-4	11.96	11.94	11.93	11.81	11.69
	-1.3	-2	12.36	12.33	12.30	12.06	11.83
	0.8	0	13.04	12.85	12.67	12.21	11.76
	3.9	3	14.15	13.64	13.14	12.40	11.66
	7.0	6	15.46	14.45	13.44	12.50	11.56
	10.1	9	15.36	14.37	13.39	12.42	11.46
	13.2	12	15.25	14.28	13.31	12.33	11.36
	16.9	15.5	15.14	14.16	13.19	12.21	11.24

Note(1) This data shows average statuses out of those possible to occur in the system control.
(Depending on controls, there may be ranges where the operation is not conducted continuously.)

(2) Symbols are as follows
TC :Total cooling capacity(kW)
SHC :Sensible heat capacity(kW)

Cool mode	Uhi	Hi	Me	Lo
Air flow	33.00	30	27	23
TC	15.26	14.00	12.88	11.76
SHF	0.68	0.68	0.67	0.66

Heat mode	Uhi	Hi	Me	Lo
Air flow	33	30	27	23
Heating capacity	17.44	16.00	14.72	13.44

Model **FDT160KXE6** Cool Mode

Air flow	Ambient air temp. (°CDB)	Indoor air temperature 21 °CDB 14 °CWB TC	21 °CDB 14 °CWB SHC	23 °CDB 16 °CWB TC	23 °CDB 16 °CWB SHC	26 °CDB 18 °CWB TC	26 °CDB 18 °CWB SHC	27 °CDB 19 °CWB TC	27 °CDB 19 °CWB SHC	28 °CDB 20 °CWB TC	28 °CDB 20 °CWB SHC	31 °CDB 22 °CWB TC	31 °CDB 22 °CWB SHC	33 °CDB 24 °CWB TC	33 °CDB 24 °CWB SHC
Uhi	10			13.94	9.93	16.66	11.29	18.02	11.62	19.17	11.87	21.48	12.80	22.30	12.41
	12			13.94	9.93	16.66	11.29	18.02	11.62	19.15	11.86	21.40	12.76	22.20	12.36
	14			13.94	9.93	16.66	11.29	18.02	11.62	19.12	11.85	21.32	12.73	22.11	12.33
	16			13.94	9.93	16.66	11.29	18.02	11.62	19.09	11.83	21.24	12.68	22.01	12.28
	18			13.94	9.93	16.66	11.29	18.02	11.62	19.07	11.83	21.16	12.65	21.91	12.24
	20			13.94	9.93	16.66	11.29	18.02	11.62	19.04	11.81	21.09	12.61	21.82	12.20
	22			13.92	9.90	16.65	11.29	18.02	11.62	18.95	11.76	20.82	12.49	21.52	12.08
33	24			13.90	9.89	16.65	11.29	18.02	11.62	18.86	11.73	20.55	12.38	21.22	11.96
(m^3/min)	26			13.88	9.88	16.57	11.25	17.85	11.55	18.64	11.62	20.23	12.23	20.90	11.81
	28	12.58	9.72	13.87	9.87	16.49	11.22	17.68	11.48	18.42	11.49	19.91	12.06	20.57	11.69
	30	12.58	9.72	13.84	9.86	16.36	11.15	17.51	11.40	18.21	11.41	19.60	11.95	20.26	11.56
	32	12.58	9.72	13.80	9.84	16.24	11.08	17.34	11.33	17.99	11.32	19.30	11.82	19.95	11.44
	34	12.58	9.72	13.76	9.83	16.18	11.06	17.11	11.22	17.71	11.18	18.89	11.64	19.54	11.27
	35	12.58	9.72	13.74	9.82	16.15	11.04	17.00	11.22	17.56	11.12	18.69	11.55	19.34	11.19
	36	12.58	9.72	13.72	9.81	16.03	10.99	16.92	11.12	17.39	11.04	18.35	11.42	18.96	11.05
	38	12.58	9.72	13.69	9.79	15.78	10.87	16.75	11.04	17.06	10.89	17.68	11.10	18.21	10.76
	39	12.58	9.72	13.67	9.79	15.66	10.81	16.66	11.00	16.89	10.81	17.34	10.98	17.83	10.62
	41	12.58	9.72	13.62	9.76	15.19	10.57	15.98	10.68	16.18	10.49	16.57	10.67	17.00	10.31
	43	12.58	9.72	13.57	9.74	14.72	10.36	15.30	10.37	15.47	10.19	15.80	10.36	16.16	10.01

Heat Mode

Air flow	Ambient air temp. DB	Ambient air temp. WB	Indoor air temp. 16 °CDB	18 °CDB	20 °CDB	22 °CDB	24 °CDB
Uhi	-19.8	-20	11.09	11.09	11.09	11.09	11.09
	-17.8	-18	11.80	11.80	11.80	11.80	11.80
	-15.7	-16	12.52	12.52	12.52	12.52	12.52
	-13.7	-14	13.23	13.23	13.23	13.23	13.23
	-11.7	-12	13.94	13.94	13.94	13.94	13.94
	-9.6	-10	14.66	14.66	14.66	14.66	14.66
	-7.5	-8	15.55	15.55	15.55	15.55	15.55
33	-5.5	-6	16.44	16.44	16.44	16.44	16.44
(m^3/min)	-3.4	-4	17.02	16.99	16.97	16.80	16.63
	-1.3	-2	17.59	17.54	17.49	17.16	16.83
	0.8	0	18.55	18.28	18.02	17.38	16.73
	3.9	3	20.12	19.41	18.69	17.64	16.59
	7.0	6	21.99	20.55	19.12	17.78	16.44
	10.1	9	21.84	20.45	19.05	17.67	16.30
	13.2	12	21.70	20.32	18.93	17.54	16.16
	16.9	15.5	21.53	20.15	18.76	17.38	15.99

Air flow	Ambient air temp. (°CDB)	Indoor air temperature 21 °CDB 14 °CWB TC	21 °CDB 14 °CWB SHC	23 °CDB 16 °CWB TC	23 °CDB 16 °CWB SHC	26 °CDB 18 °CWB TC	26 °CDB 18 °CWB SHC	27 °CDB 19 °CWB TC	27 °CDB 19 °CWB SHC	28 °CDB 20 °CWB TC	28 °CDB 20 °CWB SHC	31 °CDB 22 °CWB TC	31 °CDB 22 °CWB SHC	33 °CDB 24 °CWB TC	33 °CDB 24 °CWB SHC
Hi	10			13.12	9.26	15.68	10.53	16.96	10.88	18.04	11.09	20.21	11.95	20.99	11.56
	12			13.12	9.26	15.68	10.53	16.96	10.88	18.02	11.08	20.14	11.91	20.90	11.52
	14			13.12	9.26	15.68	10.53	16.96	10.88	18.00	11.07	20.07	11.89	20.81	11.49
	16			13.12	9.26	15.68	10.53	16.96	10.88	17.97	11.05	19.99	11.84	20.72	11.46
	18			13.12	9.26	15.68	10.53	16.96	10.88	17.95	11.04	19.92	11.79	20.62	11.43
	20			13.12	9.26	15.68	10.53	16.96	10.88	17.92	11.03	19.85	11.76	20.53	11.38
	22			13.10	9.23	15.67	10.53	16.96	10.88	17.84	11.00	19.60	11.67	20.25	11.27
30	24			13.08	9.23	15.67	10.53	16.96	10.88	17.75	10.95	19.34	11.54	19.97	11.15
(m^3/min)	26			13.07	9.22	15.59	10.49	16.80	10.79	17.55	10.85	19.04	11.41	19.67	11.03
	28	11.84	9.04	13.06	9.22	15.52	10.45	16.64	10.71	17.34	10.75	18.73	11.27	19.36	10.90
	30	11.84	9.04	13.02	9.20	15.40	10.40	16.48	10.63	17.14	10.66	18.45	11.14	19.07	10.75
	32	11.84	9.04	12.99	9.19	15.28	10.34	16.32	10.54	16.93	10.56	18.16	10.99	18.78	10.66
	34	11.84	9.04	12.95	9.17	15.23	10.31	16.11	10.45	16.66	10.41	17.78	10.85	18.39	10.50
	35	11.84	9.04	12.93	9.16	15.20	10.30	16.00	10.40	16.53	10.36	17.59	10.76	18.20	10.42
	36	11.84	9.04	12.91	9.15	15.09	10.24	15.92	10.36	16.37	10.29	17.27	10.62	17.85	10.29
	38	11.84	9.04	12.88	9.14	14.86	10.13	15.76	10.29	16.05	10.14	16.64	10.35	17.14	10.02
	39	11.84	9.04	12.86	9.11	14.74	10.06	15.68	10.25	15.89	10.06	16.32	10.22	16.79	9.86
	41	11.84	9.04	12.82	9.10	14.30	9.85	15.04	9.95	15.23	9.77	15.60	9.92	16.00	9.57
	43	11.84	9.04	12.77	9.07	13.86	9.63	14.40	9.65	14.56	9.45	14.87	9.62	15.21	9.28

Air flow	Ambient air temp. DB	Ambient air temp. WB	Indoor air temp. 16 °CDB	18 °CDB	20 °CDB	22 °CDB	24 °CDB
Hi	-19.8	-20	10.44	10.44	10.44	10.44	10.44
	-17.8	-18	11.11	11.11	11.11	11.11	11.11
	-15.7	-16	11.78	11.78	11.78	11.78	11.78
	-13.7	-14	12.46	12.46	12.46	12.46	12.46
	-11.7	-12	13.13	13.13	13.13	13.13	13.13
	-9.6	-10	13.80	13.80	13.80	13.80	13.80
	-7.5	-8	14.64	14.64	14.64	14.64	14.64
30	-5.5	-6	15.48	15.48	15.48	15.48	15.48
(m^3/min)	-3.4	-4	16.02	16.00	15.98	15.82	15.66
	-1.3	-2	16.56	16.52	16.47	16.16	15.84
	0.8	0	17.46	17.21	16.97	16.36	15.75
	3.9	3	18.95	18.27	17.60	16.61	15.62
	7.0	6	20.70	19.35	18.00	16.74	15.48
	10.1	9	20.57	19.25	17.93	16.64	15.35
	13.2	12	20.43	19.13	17.82	16.52	15.21
	16.9	15.5	20.27	18.97	17.66	16.36	15.05

Air flow	Ambient air temp. (°CDB)	Indoor air temperature 21 °CDB 14 °CWB TC	21 °CDB 14 °CWB SHC	23 °CDB 16 °CWB TC	23 °CDB 16 °CWB SHC	26 °CDB 18 °CWB TC	26 °CDB 18 °CWB SHC	27 °CDB 19 °CWB TC	27 °CDB 19 °CWB SHC	28 °CDB 20 °CWB TC	28 °CDB 20 °CWB SHC	31 °CDB 22 °CWB TC	31 °CDB 22 °CWB SHC	33 °CDB 24 °CWB TC	33 °CDB 24 °CWB SHC
Me	10			12.07	8.54	14.42	9.72	15.60	10.02	16.60	10.22	18.60	11.02	19.31	10.68
	12			12.07	8.54	14.42	9.72	15.60	10.02	16.58	10.21	18.53	10.98	19.22	10.64
	14			12.07	8.54	14.42	9.72	15.60	10.02	16.56	10.20	18.46	10.95	19.14	10.60
	16			12.07	8.54	14.42	9.72	15.60	10.02	16.53	10.19	18.39	10.93	19.06	10.57
	18			12.07	8.54	14.42	9.72	15.60	10.02	16.51	10.18	18.33	10.89	18.97	10.54
	20			12.07	8.54	14.42	9.72	15.60	10.02	16.49	10.17	18.26	10.86	18.89	10.50
	22			12.05	8.53	14.42	9.72	15.60	10.02	16.41	10.14	18.03	10.76	18.63	10.39
27	24			12.03	8.52	14.41	9.70	15.60	10.02	16.33	10.09	17.80	10.66	18.38	10.29
(m^3/min)	26			12.02	8.51	14.35	9.68	15.46	9.96	16.14	9.99	17.52	10.52	18.09	10.16
	28	10.89	8.35	12.01	8.51	14.28	9.65	15.31	9.88	15.95	9.91	17.24	10.40	17.81	10.04
	30	10.89	8.35	11.98	8.49	14.17	9.59	15.16	9.81	15.77	9.83	16.97	10.26	17.54	9.94
	32	10.89	8.35	11.95	8.48	14.06	9.54	15.01	9.74	15.58	9.74	16.71	10.16	17.28	9.84
	34	10.89	8.35	11.91	8.46	14.01	9.51	14.82	9.65	15.33	9.63	16.36	10.01	16.92	9.70
	35	10.89	8.35	11.89	8.45	13.98	9.50	14.72	9.57	15.21	9.56	16.18	9.93	16.74	9.62
	36	10.89	8.35	11.88	8.45	13.88	9.45	14.65	9.56	15.06	9.49	15.89	9.81	16.42	9.50
	38	10.89	8.35	11.85	8.42	13.67	9.34	14.50	9.50	14.77	9.36	15.31	9.56	15.77	9.24
	39	10.89	8.35	11.83	8.41	13.56	9.29	14.43	9.46	14.62	9.30	15.02	9.45	15.44	9.09
	41	10.89	8.35	11.79	8.40	13.16	9.08	13.84	9.18	14.01	9.02	14.35	9.15	14.72	8.85
	43	10.89	8.35	11.75	8.38	12.75	8.91	13.25	8.90	13.39	8.74	13.68	8.89	13.99	8.58

Air flow	Ambient air temp. DB	Ambient air temp. WB	Indoor air temp. 16 °CDB	18 °CDB	20 °CDB	22 °CDB	24 °CDB
Me	-19.8	-20	9.60	9.60	9.60	9.60	9.60
	-17.8	-18	10.22	10.22	10.22	10.22	10.22
	-15.7	-16	10.84	10.84	10.84	10.84	10.84
	-13.7	-14	11.46	11.46	11.46	11.46	11.46
	-11.7	-12	12.08	12.08	12.08	12.08	12.08
	-9.6	-10	12.70	12.70	12.70	12.70	12.70
	-7.5	-8	13.47	13.47	13.47	13.47	13.47
27	-5.5	-6	14.24	14.24	14.24	14.24	14.24
(m^3/min)	-3.4	-4	14.74	14.72	14.70	14.55	14.41
	-1.3	-2	15.24	15.19	15.15	14.86	14.57
	0.8	0	16.06	15.84	15.61	15.05	14.49
	3.9	3	17.43	16.81	16.19	15.28	14.37
	7.0	6	19.04	17.80	16.56	15.40	14.24
	10.1	9	18.92	17.71	16.50	15.31	14.12
	13.2	12	18.80	17.60	16.39	15.19	13.99
	16.9	15.5	18.65	17.45	16.25	15.05	13.85

Air flow	Ambient air temp. (°CDB)	Indoor air temperature 21 °CDB 14 °CWB TC	21 °CDB 14 °CWB SHC	23 °CDB 16 °CWB TC	23 °CDB 16 °CWB SHC	26 °CDB 18 °CWB TC	26 °CDB 18 °CWB SHC	27 °CDB 19 °CWB TC	27 °CDB 19 °CWB SHC	28 °CDB 20 °CWB TC	28 °CDB 20 °CWB SHC	31 °CDB 22 °CWB TC	31 °CDB 22 °CWB SHC	33 °CDB 24 °CWB TC	33 °CDB 24 °CWB SHC
Lo	10			10.54	7.45	12.60	8.48	13.63	8.74	14.50	8.93	16.25	9.61	16.87	9.32
	12			10.54	7.45	12.60	8.48	13.63	8.74	14.48	8.92	16.19	9.58	16.80	9.30
	14			10.54	7.45	12.60	8.48	13.63	8.74	14.46	8.91	16.13	9.56	16.72	9.25
	16			10.54	7.45	12.60	8.48	13.63	8.74	14.44	8.90	16.07	9.53	16.65	9.23
	18			10.54	7.45	12.60	8.48	13.63	8.74	14.42	8.88	16.01	9.51	16.58	9.20
	20			10.54	7.45	12.60	8.48	13.63	8.74	14.40	8.87	15.95	9.48	16.50	9.16
	22			10.53	7.44	12.60	8.48	13.63	8.74	14.34	8.84	15.75	9.39	16.28	9.07
23	24			10.51	7.44	12.59	8.47	13.63	8.74	14.27	8.81	15.55	9.30	16.05	8.97
(m^3/min)	26			10.50	7.43	12.53	8.45	13.50	8.68	14.10	8.73	15.30	9.18	15.81	8.87
	28	9.52	7.29	10.49	7.42	12.47	8.42	13.37	8.62	13.94	8.64	15.06	9.07	15.56	8.77
	30	9.52	7.29	10.47	7.42	12.38	8.37	13.25	8.57	13.77	8.57	14.83	8.97	15.33	8.68
	32	9.52	7.29	10.44	7.40	12.28	8.32	13.12	8.50	13.61	8.50	14.60	8.86	15.09	8.55
	34	9.52	7.29	10.41	7.39	12.24	8.31	12.95	8.42	13.39	8.40	14.29	8.71	14.78	8.44
	35	9.52	7.29	10.39	7.37	12.22	8.30	12.86	8.36	13.29	8.35	14.14	8.65	14.63	8.39
	36	9.52	7.29	10.38	7.36	12.12	8.24	12.80	8.35	13.16	8.29	13.88	8.55	14.34	8.28
	38	9.52	7.29	10.35	7.35	11.94	8.15	12.67	8.28	12.90	8.17	13.37	8.34	13.78	8.06
	39	9.52	7.29	10.34	7.35	11.85	8.11	12.60	8.25	12.78	8.12	13.12	8.24	13.49	7.95
	41	9.52	7.29	10.30	7.33	11.49	7.94	12.09	8.01	12.24	7.87	12.54	8.00	12.86	7.72
	43	9.52	7.29	10.27	7.31	11.14	7.78	11.57	7.77	11.70	7.64	11.96	7.76	12.23	7.49

Air flow	Ambient air temp. DB	Ambient air temp. WB	Indoor air temp. 16 °CDB	18 °CDB	20 °CDB	22 °CDB	24 °CDB
Lo	-19.8	-20	8.39	8.39	8.39	8.39	8.39
	-17.8	-18	8.93	8.93	8.93	8.93	8.93
	-15.7	-16	9.47	9.47	9.47	9.47	9.47
	-13.7	-14	10.01	10.01	10.01	10.01	10.01
	-11.7	-12	10.55	10.55	10.55	10.55	10.55
	-9.6	-10	11.09	11.09	11.09	11.09	11.09
	-7.5	-8	11.77	11.77	11.77	11.77	11.77
23	-5.5	-6	12.44	12.44	12.44	12.44	12.44
(m^3/min)	-3.4	-4	12.88	12.86	12.84	12.72	12.59
	-1.3	-2	13.31	13.28	13.24	12.99	12.73
	0.8	0	14.04	13.84	13.64	13.15	12.66
	3.9	3	15.23	14.69	14.14	13.35	12.55
	7.0	6	16.64	15.56	14.47	13.46	12.44
	10.1	9	16.53	15.47	14.42	13.38	12.34
	13.2	12	16.42	15.37	14.33	13.28	12.23
	16.9	15.5	16.30	15.25	14.20	13.15	12.10

Note(1) This data shows average statuses out of those possible to occur in the system control.
(Depending on controls, there may be ranges where the operation is not conducted continuously.)
(2) Symbols are as follows
TC :Total cooling capacity(kW)
SHC :Sensible heat capacity(kW)

Cool mode	Uhi	Hi	Me	Lo
Air flow	33.00	30	27	23
TC	17.00	16.00	14.72	12.86
SHF	0.66	0.65	0.65	0.65

Heat mode	Uhi	Hi	Me	Lo
Air flow	33	30	27	23
Heating capacity	19.12	18.00	16.56	14.47

Model **FDTW28KXE6** Cool Mode

Air flow	Ambient air temp. (°CDB)	Indoor air temperature 21 °CDB 14 °CWB TC	21 °CDB 14 °CWB SHC	23 °CDB 16 °CWB TC	23 °CDB 16 °CWB SHC	26 °CDB 18 °CWB TC	26 °CDB 18 °CWB SHC	27 °CDB 19 °CWB TC	27 °CDB 19 °CWB SHC	28 °CDB 20 °CWB TC	28 °CDB 20 °CWB SHC	31 °CDB 22 °CWB TC	31 °CDB 22 °CWB SHC	33 °CDB 24 °CWB TC	33 °CDB 24 °CWB SHC
Uhi	10			2.30	2.21	2.74	2.63	2.97	2.71	3.16	2.73	3.54	2.97	3.67	2.91
	12			2.30	2.21	2.74	2.63	2.97	2.71	3.15	2.73	3.52	2.96	3.66	2.91
	14			2.30	2.21	2.74	2.63	2.97	2.71	3.15	2.73	3.51	2.96	3.64	2.90
	16			2.30	2.21	2.74	2.63	2.97	2.71	3.14	2.72	3.50	2.96	3.63	2.90
	18			2.30	2.21	2.74	2.63	2.97	2.71	3.14	2.72	3.49	2.95	3.61	2.89
	20			2.30	2.21	2.74	2.63	2.97	2.71	3.14	2.72	3.47	2.95	3.59	2.88
	22			2.29	2.20	2.74	2.63	2.97	2.71	3.12	2.72	3.43	2.94	3.54	2.87
14	24			2.29	2.20	2.74	2.63	2.97	2.71	3.11	2.71	3.39	2.92	3.50	2.86
(m³/min)	26			2.29	2.20	2.73	2.62	2.94	2.70	3.07	2.70	3.33	2.90	3.44	2.84
	28	2.07	1.99	2.28	2.19	2.72	2.61	2.91	2.69	3.03	2.69	3.28	2.89	3.39	2.82
	30	2.07	1.99	2.28	2.19	2.70	2.59	2.88	2.67	3.00	2.68	3.23	2.86	3.34	2.81
	32	2.07	1.99	2.27	2.18	2.67	2.56	2.86	2.67	2.96	2.66	3.18	2.85	3.29	2.80
	34	2.07	1.99	2.27	2.18	2.66	2.55	2.82	2.66	2.92	2.65	3.11	2.82	3.22	2.77
	35	2.07	1.99	2.26	2.17	2.66	2.55	2.80	2.63	2.89	2.64	3.08	2.81	3.18	2.76
	36	2.07	1.99	2.26	2.17	2.64	2.53	2.79	2.65	2.86	2.63	3.02	2.80	3.12	2.74
	38	2.07	1.99	2.25	2.16	2.60	2.50	2.76	2.64	2.81	2.61	2.91	2.76	3.00	2.70
	39	2.07	1.99	2.25	2.16	2.58	2.48	2.74	2.63	2.78	2.59	2.86	2.74	2.94	2.66
	41	2.07	1.99	2.24	2.15	2.50	2.40	2.63	2.52	2.66	2.55	2.73	2.62	2.80	2.63
	43	2.07	1.99	2.24	2.15	2.43	2.33	2.52	2.42	2.55	2.45	2.60	2.50	2.66	2.55

Heat Mode

Air flow	Ambient air temp. DB	Ambient air temp. WB	Indoor air temp. 16 °CDB	18 °CDB	20 °CDB	22 °CDB	24 °CDB
Uhi	-19.8	-20	1.86	1.86	1.86	1.86	1.86
	-17.8	-18	1.98	1.98	1.98	1.98	1.98
	-15.7	-16	2.09	2.09	2.09	2.09	2.09
	-13.7	-14	2.21	2.21	2.21	2.21	2.21
	-11.7	-12	2.33	2.33	2.33	2.33	2.33
	-9.6	-10	2.45	2.45	2.45	2.45	2.45
	-7.5	-8	2.60	2.60	2.60	2.60	2.60
14	-5.5	-6	2.75	2.75	2.75	2.75	2.75
(m³/min)	-3.4	-4	2.85	2.84	2.84	2.81	2.78
	-1.3	-2	2.94	2.94	2.93	2.87	2.82
	0.8	0	3.10	3.06	3.02	2.91	2.80
	3.9	3	3.37	3.25	3.13	2.95	2.78
	7.0	6	3.68	3.44	3.20	2.98	2.75
	10.1	9	3.66	3.42	3.19	2.96	2.73
	13.2	12	3.63	3.40	3.17	2.94	2.70
	16.9	15.5	3.60	3.37	3.14	2.91	2.68

Air flow	Ambient air temp. (°CDB)	Indoor air temperature 21 °CDB 14 °CWB TC	21 °CDB 14 °CWB SHC	23 °CDB 16 °CWB TC	23 °CDB 16 °CWB SHC	26 °CDB 18 °CWB TC	26 °CDB 18 °CWB SHC	27 °CDB 19 °CWB TC	27 °CDB 19 °CWB SHC	28 °CDB 20 °CWB TC	28 °CDB 20 °CWB SHC	31 °CDB 22 °CWB TC	31 °CDB 22 °CWB SHC	33 °CDB 24 °CWB TC	33 °CDB 24 °CWB SHC
Hi	10			2.30	2.21	2.74	2.63	2.97	2.71	3.16	2.73	3.54	2.97	3.67	2.91
	12			2.30	2.21	2.74	2.63	2.97	2.71	3.15	2.73	3.52	2.96	3.66	2.91
	14			2.30	2.21	2.74	2.63	2.97	2.71	3.15	2.73	3.51	2.96	3.64	2.90
	16			2.30	2.21	2.74	2.63	2.97	2.71	3.14	2.72	3.50	2.96	3.63	2.90
	18			2.30	2.21	2.74	2.63	2.97	2.71	3.14	2.72	3.49	2.95	3.61	2.89
	20			2.30	2.21	2.74	2.63	2.97	2.71	3.14	2.72	3.47	2.95	3.59	2.88
	22			2.29	2.20	2.74	2.63	2.97	2.71	3.12	2.72	3.43	2.94	3.54	2.87
14	24			2.29	2.20	2.74	2.63	2.97	2.71	3.11	2.71	3.39	2.92	3.50	2.86
(m³/min)	26			2.29	2.20	2.73	2.62	2.94	2.70	3.07	2.70	3.33	2.90	3.44	2.84
	28	2.07	1.99	2.28	2.19	2.72	2.61	2.91	2.69	3.03	2.69	3.28	2.89	3.39	2.82
	30	2.07	1.99	2.28	2.19	2.70	2.59	2.88	2.67	3.00	2.68	3.23	2.86	3.34	2.81
	32	2.07	1.99	2.27	2.18	2.67	2.56	2.86	2.67	2.96	2.66	3.18	2.85	3.29	2.80
	34	2.07	1.99	2.27	2.18	2.66	2.55	2.82	2.66	2.92	2.65	3.11	2.82	3.22	2.77
	35	2.07	1.99	2.26	2.17	2.66	2.55	2.80	2.63	2.89	2.64	3.08	2.81	3.18	2.76
	36	2.07	1.99	2.26	2.17	2.64	2.53	2.79	2.65	2.86	2.63	3.02	2.80	3.12	2.74
	38	2.07	1.99	2.25	2.16	2.60	2.50	2.76	2.64	2.81	2.61	2.91	2.76	3.00	2.70
	39	2.07	1.99	2.25	2.16	2.58	2.48	2.74	2.63	2.78	2.59	2.86	2.74	2.94	2.66
	41	2.07	1.99	2.24	2.15	2.50	2.40	2.63	2.52	2.66	2.55	2.73	2.62	2.80	2.63
	43	2.07	1.99	2.24	2.15	2.43	2.33	2.52	2.42	2.55	2.45	2.60	2.50	2.66	2.55

Air flow	Ambient air temp. DB	Ambient air temp. WB	Indoor air temp. 16 °CDB	18 °CDB	20 °CDB	22 °CDB	24 °CDB
Hi	-19.8	-20	1.86	1.86	1.86	1.86	1.86
	-17.8	-18	1.98	1.98	1.98	1.98	1.98
	-15.7	-16	2.09	2.09	2.09	2.09	2.09
	-13.7	-14	2.21	2.21	2.21	2.21	2.21
	-11.7	-12	2.33	2.33	2.33	2.33	2.33
	-9.6	-10	2.45	2.45	2.45	2.45	2.45
	-7.5	-8	2.60	2.60	2.60	2.60	2.60
14	-5.5	-6	2.75	2.75	2.75	2.75	2.75
(m³/min)	-3.4	-4	2.85	2.84	2.84	2.81	2.78
	-1.3	-2	2.94	2.94	2.93	2.87	2.82
	0.8	0	3.10	3.06	3.02	2.91	2.80
	3.9	3	3.37	3.25	3.13	2.95	2.78
	7.0	6	3.68	3.44	3.20	2.98	2.75
	10.1	9	3.66	3.42	3.19	2.96	2.73
	13.2	12	3.63	3.40	3.17	2.94	2.70
	16.9	15.5	3.60	3.37	3.14	2.91	2.68

Air flow	Ambient air temp. (°CDB)	Indoor air temperature 21 °CDB 14 °CWB TC	21 °CDB 14 °CWB SHC	23 °CDB 16 °CWB TC	23 °CDB 16 °CWB SHC	26 °CDB 18 °CWB TC	26 °CDB 18 °CWB SHC	27 °CDB 19 °CWB TC	27 °CDB 19 °CWB SHC	28 °CDB 20 °CWB TC	28 °CDB 20 °CWB SHC	31 °CDB 22 °CWB TC	31 °CDB 22 °CWB SHC	33 °CDB 24 °CWB TC	33 °CDB 24 °CWB SHC
Me	10			2.09	2.01	2.50	2.37	2.70	2.40	2.88	2.43	3.22	2.63	3.34	2.58
	12			2.09	2.01	2.50	2.37	2.70	2.40	2.87	2.42	3.21	2.63	3.33	2.58
	14			2.09	2.01	2.50	2.37	2.70	2.40	2.87	2.42	3.20	2.62	3.32	2.57
	16			2.09	2.01	2.50	2.37	2.70	2.40	2.86	2.41	3.19	2.62	3.30	2.56
	18			2.09	2.01	2.50	2.37	2.70	2.40	2.86	2.41	3.17	2.62	3.29	2.56
	20			2.09	2.01	2.50	2.37	2.70	2.40	2.86	2.41	3.16	2.61	3.27	2.55
	22			2.09	2.01	2.50	2.37	2.70	2.40	2.84	2.41	3.12	2.59	3.23	2.54
12	24			2.08	2.00	2.50	2.37	2.70	2.40	2.83	2.40	3.08	2.58	3.18	2.52
(m³/min)	26			2.08	2.00	2.49	2.36	2.68	2.40	2.80	2.40	3.03	2.57	3.13	2.51
	28	1.89	1.81	2.08	2.00	2.47	2.35	2.65	2.38	2.76	2.38	2.99	2.55	3.09	2.50
	30	1.89	1.81	2.08	2.00	2.45	2.34	2.63	2.37	2.73	2.37	2.94	2.53	3.04	2.48
	32	1.89	1.81	2.07	1.99	2.44	2.34	2.60	2.36	2.70	2.36	2.89	2.52	2.99	2.46
	34	1.89	1.81	2.06	1.98	2.43	2.33	2.57	2.35	2.66	2.34	2.83	2.50	2.93	2.45
	35	1.89	1.81	2.06	1.98	2.42	2.32	2.55	2.35	2.63	2.34	2.80	2.49	2.90	2.44
	36	1.89	1.81	2.06	1.98	2.40	2.30	2.54	2.34	2.61	2.33	2.75	2.47	2.84	2.42
	38	1.89	1.81	2.05	1.97	2.37	2.28	2.51	2.33	2.56	2.31	2.65	2.44	2.73	2.37
	39	1.89	1.81	2.05	1.97	2.35	2.26	2.50	2.32	2.53	2.30	2.60	2.40	2.68	2.35
	41	1.89	1.81	2.04	1.96	2.28	2.19	2.40	2.28	2.43	2.26	2.49	2.37	2.55	2.32
	43	1.89	1.81	2.04	1.96	2.21	2.12	2.30	2.21	2.32	2.23	2.37	2.28	2.42	2.29

Air flow	Ambient air temp. DB	Ambient air temp. WB	Indoor air temp. 16 °CDB	18 °CDB	20 °CDB	22 °CDB	24 °CDB
Me	-19.8	-20	1.69	1.69	1.69	1.69	1.69
	-17.8	-18	1.80	1.80	1.80	1.80	1.80
	-15.7	-16	1.91	1.91	1.91	1.91	1.91
	-13.7	-14	2.01	2.01	2.01	2.01	2.01
	-11.7	-12	2.12	2.12	2.12	2.12	2.12
	-9.6	-10	2.23	2.23	2.23	2.23	2.23
	-7.5	-8	2.37	2.37	2.37	2.37	2.37
12	-5.5	-6	2.50	2.50	2.50	2.50	2.50
(m³/min)	-3.4	-4	2.59	2.59	2.58	2.56	2.53
	-1.3	-2	2.68	2.67	2.66	2.61	2.56
	0.8	0	2.82	2.78	2.74	2.64	2.55
	3.9	3	3.06	2.95	2.84	2.68	2.52
	7.0	6	3.35	3.13	2.91	2.71	2.50
	10.1	9	3.32	3.11	2.90	2.69	2.48
	13.2	12	3.30	3.09	2.88	2.67	2.46
	16.9	15.5	3.28	3.07	2.86	2.64	2.43

Air flow	Ambient air temp. (°CDB)	Indoor air temperature 21 °CDB 14 °CWB TC	21 °CDB 14 °CWB SHC	23 °CDB 16 °CWB TC	23 °CDB 16 °CWB SHC	26 °CDB 18 °CWB TC	26 °CDB 18 °CWB SHC	27 °CDB 19 °CWB TC	27 °CDB 19 °CWB SHC	28 °CDB 20 °CWB TC	28 °CDB 20 °CWB SHC	31 °CDB 22 °CWB TC	31 °CDB 22 °CWB SHC	33 °CDB 24 °CWB TC	33 °CDB 24 °CWB SHC
Lo	10			1.86	1.79	2.22	2.06	2.41	2.09	2.56	2.11	2.87	2.29	2.98	2.24
	12			1.86	1.79	2.22	2.06	2.41	2.09	2.56	2.11	2.86	2.28	2.96	2.24
	14			1.86	1.79	2.22	2.06	2.41	2.09	2.55	2.11	2.85	2.28	2.95	2.23
	16			1.86	1.79	2.22	2.06	2.41	2.09	2.55	2.11	2.84	2.28	2.94	2.23
	18			1.86	1.79	2.22	2.06	2.41	2.09	2.55	2.11	2.83	2.27	2.93	2.23
	20			1.86	1.79	2.22	2.06	2.41	2.09	2.54	2.10	2.82	2.27	2.91	2.22
	22			1.86	1.79	2.22	2.06	2.41	2.09	2.53	2.10	2.78	2.26	2.87	2.21
10	24			1.86	1.79	2.22	2.06	2.41	2.09	2.52	2.10	2.74	2.24	2.83	2.20
(m³/min)	26			1.85	1.78	2.21	2.05	2.38	2.08	2.49	2.08	2.70	2.23	2.79	2.18
	28	1.68	1.61	1.85	1.78	2.20	2.05	2.36	2.07	2.46	2.07	2.66	2.22	2.75	2.17
	30	1.68	1.61	1.85	1.78	2.18	2.04	2.34	2.06	2.43	2.06	2.62	2.20	2.71	2.14
	32	1.68	1.61	1.84	1.77	2.17	2.03	2.32	2.06	2.40	2.05	2.58	2.19	2.66	2.13
	34	1.68	1.61	1.84	1.77	2.16	2.03	2.29	2.05	2.36	2.03	2.52	2.15	2.61	2.11
	35	1.68	1.61	1.83	1.76	2.16	2.03	2.27	2.02	2.35	2.03	2.50	2.15	2.58	2.10
	36	1.68	1.61	1.83	1.76	2.14	2.02	2.26	2.04	2.32	2.02	2.45	2.13	2.53	2.09
	38	1.68	1.61	1.83	1.76	2.11	2.01	2.24	2.03	2.28	2.00	2.36	2.11	2.43	2.06
	39	1.68	1.61	1.83	1.76	2.09	2.00	2.22	2.02	2.26	2.00	2.32	2.10	2.38	2.05
	41	1.68	1.61	1.82	1.75	2.03	1.95	2.13	1.99	2.16	1.95	2.21	2.07	2.27	2.02
	43	1.68	1.61	1.81	1.74	1.97	1.89	2.04	1.94	2.07	1.92	2.11	2.03	2.16	1.99

Air flow	Ambient air temp. DB	Ambient air temp. WB	Indoor air temp. 16 °CDB	18 °CDB	20 °CDB	22 °CDB	24 °CDB
Lo	-19.8	-20	1.59	1.59	1.59	1.59	1.59
	-17.8	-18	1.69	1.69	1.69	1.69	1.69
	-15.7	-16	1.79	1.79	1.79	1.79	1.79
	-13.7	-14	1.90	1.90	1.90	1.90	1.90
	-11.7	-12	2.00	2.00	2.00	2.00	2.00
	-9.6	-10	2.10	2.10	2.10	2.10	2.10
	-7.5	-8	2.23	2.23	2.23	2.23	2.23
10	-5.5	-6	2.36	2.36	2.36	2.36	2.36
(m³/min)	-3.4	-4	2.44	2.44	2.43	2.41	2.38
	-1.3	-2	2.52	2.51	2.51	2.46	2.41
	0.8	0	2.66	2.62	2.58	2.49	2.40
	3.9	3	2.88	2.78	2.68	2.53	2.38
	7.0	6	3.15	2.95	2.74	2.55	2.36
	10.1	9	3.13	2.93	2.73	2.53	2.34
	13.2	12	3.11	2.91	2.71	2.51	2.32
	16.9	15.5	3.09	2.89	2.69	2.49	2.29

Note(1) This data shows average statuses out of those possible to occur in the system control.
(Depending on controls, there may be ranges where the operation is not conducted continuously.)

(2) Symbols are as follows
TC :Total cooling capacity(kW)
SHC :Sensible heat capacity(kW)

Cool mode	Uhi	Hi	Me	Lo
Air flow	14.00	14	12	10
TC	2.80	2.80	2.55	2.27
SHF	0.94	0.94	0.92	0.89

Heat mode	Uhi	Hi	Me	Lo
Air flow	14	14	12	10
Heating capacity	3.20	3.20	2.91	2.74

Model **FDTW45KXE6** Cool Mode

Air flow	Ambient air temp. (°CDB)	Indoor air temperature 21 °CDB 14 °CWB TC	21 °CDB 14 °CWB SHC	23 °CDB 16 °CWB TC	23 °CDB 16 °CWB SHC	26 °CDB 18 °CWB TC	26 °CDB 18 °CWB SHC	27 °CDB 19 °CWB TC	27 °CDB 19 °CWB SHC	28 °CDB 20 °CWB TC	28 °CDB 20 °CWB SHC	31 °CDB 22 °CWB TC	31 °CDB 22 °CWB SHC	33 °CDB 24 °CWB TC	33 °CDB 24 °CWB SHC
Uhi 14 (m³/min)	10			3.69	3.27	4.41	3.69	4.77	3.76	5.07	3.80	5.68	4.11	5.90	4.02
	12			3.69	3.27	4.41	3.69	4.77	3.76	5.07	3.80	5.66	4.10	5.88	4.01
	14			3.69	3.27	4.41	3.69	4.77	3.76	5.06	3.80	5.64	4.10	5.85	4.00
	16			3.69	3.27	4.41	3.69	4.77	3.76	5.05	3.79	5.62	4.09	5.83	4.00
	18			3.69	3.27	4.41	3.69	4.77	3.76	5.05	3.79	5.60	4.08	5.80	3.99
	20			3.69	3.27	4.41	3.69	4.77	3.76	5.04	3.79	5.58	4.08	5.78	3.98
	22			3.68	3.26	4.41	3.69	4.77	3.76	5.02	3.78	5.51	4.05	5.70	3.95
	24			3.68	3.26	4.41	3.69	4.77	3.76	4.99	3.77	5.44	4.02	5.62	3.92
	26			3.68	3.26	4.39	3.68	4.73	3.74	4.93	3.75	5.35	3.99	5.53	3.89
	28	3.33	3.20	3.67	3.26	4.37	3.68	4.68	3.72	4.88	3.73	5.27	3.96	5.44	3.87
	30	3.33	3.20	3.66	3.25	4.33	3.65	4.64	3.71	4.82	3.70	5.19	3.94	5.36	3.83
	32	3.33	3.20	3.65	3.25	4.30	3.64	4.59	3.69	4.76	3.68	5.11	3.91	5.28	3.81
	34	3.33	3.20	3.64	3.25	4.28	3.63	4.53	3.67	4.69	3.65	5.00	3.87	5.17	3.78
	35	3.33	3.20	3.64	3.25	4.28	3.63	4.50	3.65	4.65	3.64	4.95	3.85	5.12	3.76
	36	3.33	3.20	3.63	3.24	4.24	3.60	4.48	3.65	4.60	3.62	4.86	3.82	5.02	3.73
	38	3.33	3.20	3.62	3.24	4.18	3.58	4.43	3.62	4.52	3.59	4.68	3.75	4.82	3.66
	39	3.33	3.20	3.62	3.24	4.15	3.57	4.41	3.61	4.47	3.55	4.59	3.72	4.72	3.63
	41	3.33	3.20	3.61	3.23	4.02	3.52	4.23	3.53	4.28	3.49	4.39	3.66	4.50	3.56
	43	3.33	3.20	3.59	3.23	3.90	3.47	4.05	3.47	4.09	3.42	4.18	3.58	4.28	3.50

Heat Mode

Air flow	Ambient air temp. DB	Ambient air temp. WB	Indoor air temp. 16 °CDB	18 °CDB	20 °CDB	22 °CDB	24 °CDB
Uhi 14 (m³/min)	-19.8	-20	2.90	2.90	2.90	2.90	2.90
	-17.8	-18	3.09	3.09	3.09	3.09	3.09
	-15.7	-16	3.27	3.27	3.27	3.27	3.27
	-13.7	-14	3.46	3.46	3.46	3.46	3.46
	-11.7	-12	3.65	3.65	3.65	3.65	3.65
	-9.6	-10	3.83	3.83	3.83	3.83	3.83
	-7.5	-8	4.07	4.07	4.07	4.07	4.07
	-5.5	-6	4.30	4.30	4.30	4.30	4.30
	-3.4	-4	4.45	4.44	4.44	4.39	4.35
	-1.3	-2	4.60	4.59	4.58	4.49	4.40
	0.8	0	4.85	4.78	4.71	4.54	4.38
	3.9	3	5.26	5.08	4.89	4.61	4.34
	7.0	6	5.75	5.38	5.00	4.65	4.30
	10.1	9	5.71	5.35	4.98	4.62	4.26
	13.2	12	5.68	5.31	4.95	4.59	4.23
	16.9	15.5	5.63	5.27	4.91	4.54	4.18

Air flow	Ambient air temp. (°CDB)	Indoor air temperature 21 °CDB 14 °CWB TC	21 °CDB 14 °CWB SHC	23 °CDB 16 °CWB TC	23 °CDB 16 °CWB SHC	26 °CDB 18 °CWB TC	26 °CDB 18 °CWB SHC	27 °CDB 19 °CWB TC	27 °CDB 19 °CWB SHC	28 °CDB 20 °CWB TC	28 °CDB 20 °CWB SHC	31 °CDB 22 °CWB TC	31 °CDB 22 °CWB SHC	33 °CDB 24 °CWB TC	33 °CDB 24 °CWB SHC
Hi 14 (m³/min)	10			3.69	3.27	4.41	3.69	4.77	3.76	5.07	3.80	5.68	4.11	5.90	4.02
	12			3.69	3.27	4.41	3.69	4.77	3.76	5.07	3.80	5.66	4.10	5.88	4.01
	14			3.69	3.27	4.41	3.69	4.77	3.76	5.06	3.80	5.64	4.10	5.85	4.00
	16			3.69	3.27	4.41	3.69	4.77	3.76	5.05	3.79	5.62	4.09	5.83	4.00
	18			3.69	3.27	4.41	3.69	4.77	3.76	5.05	3.79	5.60	4.08	5.80	3.99
	20			3.69	3.27	4.41	3.69	4.77	3.76	5.04	3.79	5.58	4.08	5.78	3.98
	22			3.68	3.26	4.41	3.69	4.77	3.76	5.02	3.78	5.51	4.05	5.70	3.95
	24			3.68	3.26	4.41	3.69	4.77	3.76	4.99	3.77	5.44	4.02	5.62	3.92
	26			3.68	3.26	4.39	3.68	4.73	3.74	4.93	3.75	5.35	3.99	5.53	3.89
	28	3.33	3.20	3.67	3.26	4.37	3.68	4.68	3.72	4.88	3.73	5.27	3.96	5.44	3.87
	30	3.33	3.20	3.66	3.25	4.33	3.65	4.64	3.71	4.82	3.70	5.19	3.94	5.36	3.83
	32	3.33	3.20	3.65	3.25	4.30	3.64	4.59	3.69	4.76	3.68	5.11	3.91	5.28	3.81
	34	3.33	3.20	3.64	3.25	4.28	3.63	4.53	3.67	4.69	3.65	5.00	3.87	5.17	3.78
	35	3.33	3.20	3.64	3.25	4.28	3.63	4.50	3.65	4.65	3.64	4.95	3.85	5.12	3.76
	36	3.33	3.20	3.63	3.24	4.24	3.60	4.48	3.65	4.60	3.62	4.86	3.82	5.02	3.73
	38	3.33	3.20	3.62	3.24	4.18	3.58	4.43	3.62	4.52	3.59	4.68	3.75	4.82	3.66
	39	3.33	3.20	3.62	3.24	4.15	3.57	4.41	3.61	4.47	3.55	4.59	3.72	4.72	3.63
	41	3.33	3.20	3.61	3.23	4.02	3.52	4.23	3.53	4.28	3.49	4.39	3.66	4.50	3.56
	43	3.33	3.20	3.59	3.23	3.90	3.47	4.05	3.47	4.09	3.42	4.18	3.58	4.28	3.50

Air flow	Ambient air temp. DB	Ambient air temp. WB	Indoor air temp. 16 °CDB	18 °CDB	20 °CDB	22 °CDB	24 °CDB
Hi 14 (m³/min)	-19.8	-20	2.90	2.90	2.90	2.90	2.90
	-17.8	-18	3.09	3.09	3.09	3.09	3.09
	-15.7	-16	3.27	3.27	3.27	3.27	3.27
	-13.7	-14	3.46	3.46	3.46	3.46	3.46
	-11.7	-12	3.65	3.65	3.65	3.65	3.65
	-9.6	-10	3.83	3.83	3.83	3.83	3.83
	-7.5	-8	4.07	4.07	4.07	4.07	4.07
	-5.5	-6	4.30	4.30	4.30	4.30	4.30
	-3.4	-4	4.45	4.44	4.44	4.39	4.35
	-1.3	-2	4.60	4.59	4.58	4.49	4.40
	0.8	0	4.85	4.78	4.71	4.54	4.38
	3.9	3	5.26	5.08	4.89	4.61	4.34
	7.0	6	5.75	5.38	5.00	4.65	4.30
	10.1	9	5.71	5.35	4.98	4.62	4.26
	13.2	12	5.68	5.31	4.95	4.59	4.23
	16.9	15.5	5.63	5.27	4.91	4.54	4.18

Air flow	Ambient air temp. (°CDB)	Indoor air temperature 21 °CDB 14 °CWB TC	21 °CDB 14 °CWB SHC	23 °CDB 16 °CWB TC	23 °CDB 16 °CWB SHC	26 °CDB 18 °CWB TC	26 °CDB 18 °CWB SHC	27 °CDB 19 °CWB TC	27 °CDB 19 °CWB SHC	28 °CDB 20 °CWB TC	28 °CDB 20 °CWB SHC	31 °CDB 22 °CWB TC	31 °CDB 22 °CWB SHC	33 °CDB 24 °CWB TC	33 °CDB 24 °CWB SHC
Me 12 (m³/min)	10			3.34	2.89	4.00	3.27	4.32	3.32	4.60	3.36	5.15	3.65	5.35	3.56
	12			3.34	2.89	4.00	3.27	4.32	3.32	4.60	3.36	5.14	3.64	5.33	3.55
	14			3.34	2.89	4.00	3.27	4.32	3.32	4.59	3.36	5.12	3.64	5.31	3.55
	16			3.34	2.89	4.00	3.27	4.32	3.32	4.58	3.35	5.10	3.63	5.28	3.54
	18			3.34	2.89	4.00	3.27	4.32	3.32	4.58	3.35	5.08	3.62	5.26	3.53
	20			3.34	2.89	4.00	3.27	4.32	3.32	4.57	3.35	5.06	3.61	5.24	3.52
	22			3.34	2.89	4.00	3.27	4.32	3.32	4.55	3.34	5.00	3.59	5.16	3.49
	24			3.33	2.89	3.99	3.26	4.32	3.32	4.53	3.33	4.93	3.56	5.09	3.47
	26			3.33	2.89	3.98	3.26	4.28	3.31	4.47	3.31	4.86	3.54	5.02	3.45
	28	3.02	2.86	3.33	2.89	3.96	3.25	4.24	3.29	4.42	3.29	4.78	3.51	4.94	3.43
	30	3.02	2.86	3.32	2.88	3.93	3.24	4.20	3.28	4.37	3.28	4.70	3.48	4.86	3.39
	32	3.02	2.86	3.31	2.88	3.90	3.23	4.16	3.26	4.32	3.26	4.63	3.45	4.79	3.37
	34	3.02	2.86	3.30	2.88	3.88	3.22	4.11	3.24	4.25	3.23	4.53	3.42	4.69	3.34
	35	3.02	2.86	3.30	2.88	3.88	3.22	4.08	3.22	4.21	3.22	4.48	3.40	4.64	3.33
	36	3.02	2.86	3.29	2.87	3.85	3.21	4.06	3.23	4.17	3.20	4.40	3.38	4.55	3.29
	38	3.02	2.86	3.28	2.87	3.79	3.18	4.02	3.21	4.09	3.17	4.24	3.32	4.37	3.24
	39	3.02	2.86	3.28	2.87	3.76	3.17	4.00	3.20	4.05	3.16	4.16	3.29	4.28	3.21
	41	3.02	2.86	3.27	2.86	3.65	3.13	3.84	3.14	3.88	3.10	3.98	3.21	4.08	3.13
	43	3.02	2.86	3.26	2.86	3.53	3.08	3.67	3.07	3.71	3.03	3.79	3.15	3.88	3.07

Air flow	Ambient air temp. DB	Ambient air temp. WB	Indoor air temp. 16 °CDB	18 °CDB	20 °CDB	22 °CDB	24 °CDB
Me 12 (m³/min)	-19.8	-20	2.62	2.62	2.62	2.62	2.62
	-17.8	-18	2.78	2.78	2.78	2.78	2.78
	-15.7	-16	2.95	2.95	2.95	2.95	2.95
	-13.7	-14	3.12	3.12	3.12	3.12	3.12
	-11.7	-12	3.29	3.29	3.29	3.29	3.29
	-9.6	-10	3.46	3.46	3.46	3.46	3.46
	-7.5	-8	3.67	3.67	3.67	3.67	3.67
	-5.5	-6	3.88	3.88	3.88	3.88	3.88
	-3.4	-4	4.01	4.01	4.00	3.96	3.92
	-1.3	-2	4.15	4.14	4.13	4.05	3.97
	0.8	0	4.37	4.31	4.25	4.10	3.95
	3.9	3	4.75	4.58	4.41	4.16	3.91
	7.0	6	5.19	4.85	4.51	4.19	3.88
	10.1	9	5.15	4.82	4.49	4.17	3.84
	13.2	12	5.12	4.79	4.46	4.14	3.81
	16.9	15.5	5.08	4.75	4.43	4.10	3.77

Air flow	Ambient air temp. (°CDB)	Indoor air temperature 21 °CDB 14 °CWB TC	21 °CDB 14 °CWB SHC	23 °CDB 16 °CWB TC	23 °CDB 16 °CWB SHC	26 °CDB 18 °CWB TC	26 °CDB 18 °CWB SHC	27 °CDB 19 °CWB TC	27 °CDB 19 °CWB SHC	28 °CDB 20 °CWB TC	28 °CDB 20 °CWB SHC	31 °CDB 22 °CWB TC	31 °CDB 22 °CWB SHC	33 °CDB 24 °CWB TC	33 °CDB 24 °CWB SHC
Lo 10 (m³/min)	10			2.96	2.50	3.54	2.82	3.83	2.88	4.07	2.92	4.56	3.15	4.74	3.08
	12			2.96	2.50	3.54	2.82	3.83	2.88	4.07	2.92	4.54	3.15	4.71	3.07
	14			2.96	2.50	3.54	2.82	3.83	2.88	4.06	2.92	4.53	3.14	4.69	3.06
	16			2.96	2.50	3.54	2.82	3.83	2.88	4.05	2.91	4.51	3.14	4.67	3.05
	18			2.96	2.50	3.54	2.82	3.83	2.88	4.05	2.91	4.49	3.13	4.65	3.05
	20			2.96	2.50	3.54	2.82	3.83	2.88	4.04	2.91	4.48	3.13	4.63	3.04
	22			2.95	2.50	3.54	2.82	3.83	2.88	4.02	2.90	4.42	3.10	4.57	3.02
	24			2.95	2.50	3.53	2.82	3.83	2.88	4.01	2.90	4.36	3.08	4.51	3.00
	26			2.95	2.50	3.52	2.82	3.79	2.87	3.96	2.87	4.30	3.06	4.44	2.98
	28	2.67	2.46	2.95	2.50	3.50	2.81	3.75	2.85	3.91	2.85	4.23	3.03	4.37	2.95
	30	2.67	2.46	2.94	2.49	3.47	2.80	3.72	2.84	3.87	2.84	4.16	3.00	4.30	2.93
	32	2.67	2.46	2.93	2.49	3.45	2.79	3.68	2.83	3.82	2.82	4.10	2.98	4.24	2.91
	34	2.67	2.46	2.92	2.48	3.44	2.78	3.63	2.80	3.76	2.80	4.01	2.95	4.15	2.86
	35	2.67	2.46	2.92	2.48	3.43	2.78	3.61	2.78	3.73	2.79	3.97	2.94	4.11	2.85
	36	2.67	2.46	2.91	2.48	3.40	2.77	3.59	2.79	3.69	2.77	3.90	2.91	4.03	2.83
	38	2.67	2.46	2.91	2.48	3.35	2.75	3.56	2.77	3.62	2.74	3.75	2.85	3.87	2.78
	39	2.67	2.46	2.90	2.48	3.33	2.74	3.54	2.77	3.59	2.73	3.68	2.82	3.79	2.75
	41	2.67	2.46	2.89	2.47	3.23	2.69	3.39	2.71	3.44	2.67	3.52	2.77	3.61	2.70
	43	2.67	2.46	2.88	2.47	3.13	2.66	3.25	2.65	3.28	2.61	3.36	2.72	3.43	2.64

Air flow	Ambient air temp. DB	Ambient air temp. WB	Indoor air temp. 16 °CDB	18 °CDB	20 °CDB	22 °CDB	24 °CDB
Lo 10 (m³/min)	-19.8	-20	2.30	2.30	2.30	2.30	2.30
	-17.8	-18	2.44	2.44	2.44	2.44	2.44
	-15.7	-16	2.59	2.59	2.59	2.59	2.59
	-13.7	-14	2.74	2.74	2.74	2.74	2.74
	-11.7	-12	2.89	2.89	2.89	2.89	2.89
	-9.6	-10	3.04	3.04	3.04	3.04	3.04
	-7.5	-8	3.22	3.22	3.22	3.22	3.22
	-5.5	-6	3.41	3.41	3.41	3.41	3.41
	-3.4	-4	3.52	3.52	3.51	3.48	3.45
	-1.3	-2	3.64	3.63	3.62	3.55	3.48
	0.8	0	3.84	3.79	3.73	3.60	3.47
	3.9	3	4.17	4.02	3.87	3.65	3.44
	7.0	6	4.55	4.26	3.96	3.68	3.41
	10.1	9	4.52	4.23	3.95	3.66	3.38
	13.2	12	4.49	4.21	3.92	3.63	3.35
	16.9	15.5	4.46	4.17	3.89	3.60	3.31

Note(1) This data shows average statuses out of those possible to occur in the system control.
(Depending on controls, there may be ranges where the operation is not conducted continuously.)
(2) Symbols are as follows
TC :Total cooling capacity(kW)
SHC :Sensible heat capacity(kW)

Cool mode	Uhi	Hi	Me	Lo
Air flow	14.00	14	12	10
TC	4.50	4.50	4.08	3.61
SHF	0.81	0.81	0.79	0.77

Heat mode	Uhi	Hi	Me	Lo
Air flow	14	14	12	10
Heating capacity	5.00	5.00	4.51	3.96

Model **FDTW56KXE6** Cool Mode

Air flow	Ambient air temp. (°CDB)	Indoor air temperature 21 °CDB 14 °CWB TC	21 °CDB 14 °CWB SHC	23 °CDB 16 °CWB TC	23 °CDB 16 °CWB SHC	26 °CDB 18 °CWB TC	26 °CDB 18 °CWB SHC	27 °CDB 19 °CWB TC	27 °CDB 19 °CWB SHC	28 °CDB 20 °CWB TC	28 °CDB 20 °CWB SHC	31 °CDB 22 °CWB TC	31 °CDB 22 °CWB SHC	33 °CDB 24 °CWB TC	33 °CDB 24 °CWB SHC
Uhi	10			4.59	3.65	5.49	4.14	5.94	4.25	6.32	4.30	7.07	4.64	7.35	4.50
	12			4.59	3.65	5.49	4.14	5.94	4.25	6.31	4.30	7.05	4.63	7.31	4.49
	14			4.59	3.65	5.49	4.14	5.94	4.25	6.30	4.30	7.02	4.62	7.28	4.48
	16			4.59	3.65	5.49	4.14	5.94	4.25	6.29	4.29	7.00	4.62	7.25	4.47
	18			4.59	3.65	5.49	4.14	5.94	4.25	6.28	4.29	6.97	4.60	7.22	4.46
	20			4.59	3.65	5.49	4.14	5.94	4.25	6.27	4.28	6.95	4.58	7.19	4.45
	22			4.58	3.65	5.49	4.14	5.94	4.25	6.24	4.27	6.86	4.54	7.09	4.42
14	24			4.58	3.65	5.48	4.14	5.94	4.25	6.21	4.25	6.77	4.51	6.99	4.39
(m^3/min)	26			4.57	3.64	5.46	4.13	5.88	4.22	6.14	4.23	6.66	4.47	6.88	4.35
	28	4.14	3.60	4.57	3.64	5.43	4.12	5.82	4.19	6.07	4.20	6.56	4.44	6.78	4.32
	30	4.14	3.60	4.56	3.64	5.39	4.10	5.77	4.17	6.00	4.17	6.46	4.40	6.67	4.28
	32	4.14	3.60	4.55	3.63	5.35	4.09	5.71	4.15	5.93	4.14	6.36	4.37	6.57	4.24
	34	4.14	3.60	4.53	3.63	5.33	4.08	5.64	4.12	5.83	4.10	6.22	4.31	6.44	4.20
	35	4.14	3.60	4.52	3.62	5.32	4.07	5.60	4.09	5.79	4.09	6.16	4.29	6.37	4.18
	36	4.14	3.60	4.52	3.62	5.28	4.06	5.57	4.09	5.73	4.06	6.05	4.25	6.25	4.13
	38	4.14	3.60	4.51	3.62	5.20	4.02	5.52	4.07	5.62	4.02	5.82	4.16	6.00	4.05
	39	4.14	3.60	4.50	3.61	5.16	4.00	5.49	4.05	5.56	3.99	5.71	4.12	5.87	4.01
	41	4.14	3.60	4.49	3.61	5.00	3.94	5.26	3.96	5.33	3.90	5.46	4.04	5.60	3.92
	43	4.14	3.60	4.47	3.60	4.85	3.87	5.04	3.87	5.10	3.81	5.21	3.94	5.32	3.82

Heat Mode

Air flow	Ambient air temp. DB	Ambient air temp. WB	Indoor air temp. 16 °CDB	18 °CDB	20 °CDB	22 °CDB	24 °CDB
Uhi	-19.8	-20	3.65	3.65	3.65	3.65	3.65
	-17.8	-18	3.89	3.89	3.89	3.89	3.89
	-15.7	-16	4.12	4.12	4.12	4.12	4.12
	-13.7	-14	4.36	4.36	4.36	4.36	4.36
	-11.7	-12	4.59	4.59	4.59	4.59	4.59
	-9.6	-10	4.83	4.83	4.83	4.83	4.83
	-7.5	-8	5.12	5.12	5.12	5.12	5.12
14	-5.5	-6	5.42	5.42	5.42	5.42	5.42
(m^3/min)	-3.4	-4	5.61	5.60	5.59	5.54	5.48
	-1.3	-2	5.80	5.78	5.76	5.65	5.54
	0.8	0	6.11	6.02	5.94	5.73	5.51
	3.9	3	6.63	6.39	6.16	5.81	5.47
	7.0	6	7.25	6.77	6.30	5.86	5.42
	10.1	9	7.20	6.74	6.28	5.82	5.37
	13.2	12	7.15	6.69	6.24	5.78	5.32
	16.9	15.5	7.10	6.64	6.18	5.73	5.27

Air flow	Ambient air temp. (°CDB)	Indoor air temperature 21 °CDB 14 °CWB TC	21 °CDB 14 °CWB SHC	23 °CDB 16 °CWB TC	23 °CDB 16 °CWB SHC	26 °CDB 18 °CWB TC	26 °CDB 18 °CWB SHC	27 °CDB 19 °CWB TC	27 °CDB 19 °CWB SHC	28 °CDB 20 °CWB TC	28 °CDB 20 °CWB SHC	31 °CDB 22 °CWB TC	31 °CDB 22 °CWB SHC	33 °CDB 24 °CWB TC	33 °CDB 24 °CWB SHC
Hi	10			4.59	3.65	5.49	4.14	5.94	4.25	6.32	4.30	7.07	4.64	7.35	4.50
	12			4.59	3.65	5.49	4.14	5.94	4.25	6.31	4.30	7.05	4.63	7.31	4.49
	14			4.59	3.65	5.49	4.14	5.94	4.25	6.30	4.30	7.02	4.62	7.28	4.48
	16			4.59	3.65	5.49	4.14	5.94	4.25	6.29	4.29	7.00	4.62	7.25	4.47
	18			4.59	3.65	5.49	4.14	5.94	4.25	6.28	4.29	6.97	4.60	7.22	4.46
	20			4.59	3.65	5.49	4.14	5.94	4.25	6.27	4.28	6.95	4.58	7.19	4.45
	22			4.58	3.65	5.49	4.14	5.94	4.25	6.24	4.27	6.86	4.54	7.09	4.42
14	24			4.58	3.65	5.48	4.14	5.94	4.25	6.21	4.25	6.77	4.51	6.99	4.39
(m^3/min)	26			4.57	3.64	5.46	4.13	5.88	4.22	6.14	4.23	6.66	4.47	6.88	4.35
	28	4.14	3.60	4.57	3.64	5.43	4.12	5.82	4.19	6.07	4.20	6.56	4.44	6.78	4.32
	30	4.14	3.60	4.56	3.64	5.39	4.10	5.77	4.17	6.00	4.17	6.46	4.40	6.67	4.28
	32	4.14	3.60	4.55	3.63	5.35	4.09	5.71	4.15	5.93	4.14	6.36	4.37	6.57	4.24
	34	4.14	3.60	4.53	3.63	5.33	4.08	5.64	4.12	5.83	4.10	6.22	4.31	6.44	4.20
	35	4.14	3.60	4.52	3.62	5.32	4.07	5.60	4.09	5.79	4.09	6.16	4.29	6.37	4.18
	36	4.14	3.60	4.52	3.62	5.28	4.06	5.57	4.09	5.73	4.06	6.05	4.25	6.25	4.13
	38	4.14	3.60	4.51	3.62	5.20	4.02	5.52	4.07	5.62	4.02	5.82	4.16	6.00	4.05
	39	4.14	3.60	4.50	3.61	5.16	4.00	5.49	4.05	5.56	3.99	5.71	4.12	5.87	4.01
	41	4.14	3.60	4.49	3.61	5.00	3.94	5.26	3.96	5.33	3.90	5.46	4.04	5.60	3.92
	43	4.14	3.60	4.47	3.60	4.85	3.87	5.04	3.87	5.10	3.81	5.21	3.94	5.32	3.82

Air flow	Ambient air temp. DB	Ambient air temp. WB	Indoor air temp. 16 °CDB	18 °CDB	20 °CDB	22 °CDB	24 °CDB
Hi	-19.8	-20	3.65	3.65	3.65	3.65	3.65
	-17.8	-18	3.89	3.89	3.89	3.89	3.89
	-15.7	-16	4.12	4.12	4.12	4.12	4.12
	-13.7	-14	4.36	4.36	4.36	4.36	4.36
	-11.7	-12	4.59	4.59	4.59	4.59	4.59
	-9.6	-10	4.83	4.83	4.83	4.83	4.83
	-7.5	-8	5.12	5.12	5.12	5.12	5.12
14	-5.5	-6	5.42	5.42	5.42	5.42	5.42
(m^3/min)	-3.4	-4	5.61	5.60	5.59	5.54	5.48
	-1.3	-2	5.80	5.78	5.76	5.65	5.54
	0.8	0	6.11	6.02	5.94	5.73	5.51
	3.9	3	6.63	6.39	6.16	5.81	5.47
	7.0	6	7.25	6.77	6.30	5.86	5.42
	10.1	9	7.20	6.74	6.28	5.82	5.37
	13.2	12	7.15	6.69	6.24	5.78	5.32
	16.9	15.5	7.10	6.64	6.18	5.73	5.27

Air flow	Ambient air temp. (°CDB)	Indoor air temperature 21 °CDB 14 °CWB TC	21 °CDB 14 °CWB SHC	23 °CDB 16 °CWB TC	23 °CDB 16 °CWB SHC	26 °CDB 18 °CWB TC	26 °CDB 18 °CWB SHC	27 °CDB 19 °CWB TC	27 °CDB 19 °CWB SHC	28 °CDB 20 °CWB TC	28 °CDB 20 °CWB SHC	31 °CDB 22 °CWB TC	31 °CDB 22 °CWB SHC	33 °CDB 24 °CWB TC	33 °CDB 24 °CWB SHC
Me	10			4.09	3.22	4.89	3.65	5.29	3.74	5.63	3.79	6.30	4.08	6.55	3.98
	12			4.09	3.22	4.89	3.65	5.29	3.74	5.62	3.79	6.28	4.08	6.52	3.97
	14			4.09	3.22	4.89	3.65	5.29	3.74	5.61	3.78	6.26	4.07	6.49	3.96
	16			4.09	3.22	4.89	3.65	5.29	3.74	5.60	3.78	6.24	4.06	6.46	3.95
	18			4.09	3.22	4.89	3.65	5.29	3.74	5.60	3.78	6.21	4.05	6.43	3.94
	20			4.09	3.22	4.89	3.65	5.29	3.74	5.59	3.78	6.19	4.04	6.40	3.93
	22			4.08	3.22	4.89	3.65	5.29	3.74	5.56	3.76	6.11	4.01	6.32	3.90
12	24			4.08	3.22	4.89	3.65	5.29	3.74	5.54	3.76	6.03	3.98	6.23	3.87
(m^3/min)	26			4.08	3.22	4.86	3.64	5.24	3.72	5.47	3.72	5.94	3.94	6.13	3.83
	28	3.69	3.17	4.07	3.21	4.84	3.63	5.19	3.70	5.41	3.70	5.84	3.91	6.04	3.80
	30	3.69	3.17	4.06	3.21	4.80	3.61	5.14	3.68	5.34	3.67	5.75	3.88	5.95	3.77
	32	3.69	3.17	4.05	3.21	4.77	3.60	5.09	3.65	5.28	3.65	5.66	3.84	5.86	3.74
	34	3.69	3.17	4.04	3.20	4.75	3.59	5.02	3.62	5.20	3.61	5.54	3.79	5.74	3.69
	35	3.69	3.17	4.03	3.20	4.74	3.58	4.99	3.59	5.16	3.60	5.49	3.77	5.68	3.67
	36	3.69	3.17	4.03	3.20	4.70	3.57	4.97	3.60	5.11	3.58	5.39	3.74	5.57	3.64
	38	3.69	3.17	4.02	3.19	4.63	3.54	4.92	3.58	5.01	3.53	5.19	3.66	5.35	3.56
	39	3.69	3.17	4.01	3.19	4.60	3.53	4.89	3.57	4.96	3.51	5.09	3.63	5.24	3.52
	41	3.69	3.17	4.00	3.18	4.46	3.46	4.69	3.49	4.75	3.44	4.87	3.54	4.99	3.44
	43	3.69	3.17	3.98	3.18	4.32	3.39	4.49	3.39	4.54	3.34	4.64	3.46	4.74	3.36

Air flow	Ambient air temp. DB	Ambient air temp. WB	Indoor air temp. 16 °CDB	18 °CDB	20 °CDB	22 °CDB	24 °CDB
Me	-19.8	-20	3.24	3.24	3.24	3.24	3.24
	-17.8	-18	3.45	3.45	3.45	3.45	3.45
	-15.7	-16	3.66	3.66	3.66	3.66	3.66
	-13.7	-14	3.87	3.87	3.87	3.87	3.87
	-11.7	-12	4.08	4.08	4.08	4.08	4.08
	-9.6	-10	4.29	4.29	4.29	4.29	4.29
	-7.5	-8	4.55	4.55	4.55	4.55	4.55
12	-5.5	-6	4.81	4.81	4.81	4.81	4.81
(m^3/min)	-3.4	-4	4.98	4.97	4.96	4.91	4.86
	-1.3	-2	5.14	5.13	5.11	5.02	4.92
	0.8	0	5.42	5.35	5.27	5.08	4.89
	3.9	3	5.88	5.67	5.46	5.16	4.85
	7.0	6	6.43	6.01	5.59	5.20	4.81
	10.1	9	6.39	5.98	5.57	5.17	4.77
	13.2	12	6.34	5.94	5.53	5.13	4.72
	16.9	15.5	6.30	5.89	5.49	5.08	4.67

Air flow	Ambient air temp. (°CDB)	Indoor air temperature 21 °CDB 14 °CWB TC	21 °CDB 14 °CWB SHC	23 °CDB 16 °CWB TC	23 °CDB 16 °CWB SHC	26 °CDB 18 °CWB TC	26 °CDB 18 °CWB SHC	27 °CDB 19 °CWB TC	27 °CDB 19 °CWB SHC	28 °CDB 20 °CWB TC	28 °CDB 20 °CWB SHC	31 °CDB 22 °CWB TC	31 °CDB 22 °CWB SHC	33 °CDB 24 °CWB TC	33 °CDB 24 °CWB SHC
Lo	10			3.54	2.76	4.23	3.12	4.58	3.20	4.87	3.25	5.46	3.50	5.67	3.41
	12			3.54	2.76	4.23	3.12	4.58	3.20	4.87	3.25	5.44	3.50	5.64	3.40
	14			3.54	2.76	4.23	3.12	4.58	3.20	4.86	3.24	5.42	3.49	5.62	3.40
	16			3.54	2.76	4.23	3.12	4.58	3.20	4.85	3.24	5.40	3.48	5.59	3.38
	18			3.54	2.76	4.23	3.12	4.58	3.20	4.85	3.24	5.38	3.47	5.57	3.37
	20			3.54	2.76	4.23	3.12	4.58	3.20	4.84	3.24	5.36	3.47	5.54	3.36
	22			3.54	2.76	4.23	3.12	4.58	3.20	4.82	3.23	5.29	3.44	5.47	3.34
10	24			3.53	2.76	4.23	3.12	4.58	3.20	4.79	3.22	5.22	3.41	5.39	3.31
(m^3/min)	26			3.53	2.76	4.21	3.11	4.54	3.18	4.74	3.19	5.14	3.38	5.31	3.28
	28	3.20	2.72	3.53	2.76	4.19	3.10	4.49	3.15	4.68	3.17	5.06	3.35	5.23	3.25
	30	3.20	2.72	3.52	2.75	4.16	3.09	4.45	3.14	4.63	3.14	4.98	3.32	5.15	3.22
	32	3.20	2.72	3.51	2.75	4.13	3.08	4.41	3.12	4.57	3.11	4.90	3.28	5.07	3.19
	34	3.20	2.72	3.50	2.74	4.11	3.07	4.35	3.10	4.50	3.09	4.80	3.25	4.97	3.16
	35	3.20	2.72	3.49	2.74	4.10	3.06	4.32	3.02	4.46	3.07	4.75	3.23	4.91	3.14
	36	3.20	2.72	3.49	2.74	4.07	3.05	4.30	3.08	4.42	3.05	4.66	3.19	4.82	3.11
	38	3.20	2.72	3.48	2.73	4.01	3.03	4.26	3.06	4.33	3.02	4.49	3.13	4.63	3.04
	39	3.20	2.72	3.47	2.73	3.98	3.01	4.23	3.05	4.29	3.00	4.41	3.10	4.53	3.01
	41	3.20	2.72	3.46	2.73	3.86	2.96	4.06	2.98	4.11	2.93	4.21	3.03	4.32	2.93
	43	3.20	2.72	3.45	2.72	3.74	2.91	3.89	2.91	3.93	2.86	4.02	2.96	4.11	2.85

Air flow	Ambient air temp. DB	Ambient air temp. WB	Indoor air temp. 16 °CDB	18 °CDB	20 °CDB	22 °CDB	24 °CDB
Lo	-19.8	-20	2.80	2.80	2.80	2.80	2.80
	-17.8	-18	2.98	2.98	2.98	2.98	2.98
	-15.7	-16	3.16	3.16	3.16	3.16	3.16
	-13.7	-14	3.34	3.34	3.34	3.34	3.34
	-11.7	-12	3.52	3.52	3.52	3.52	3.52
	-9.6	-10	3.70	3.70	3.70	3.70	3.70
	-7.5	-8	3.92	3.92	3.92	3.92	3.92
10	-5.5	-6	4.15	4.15	4.15	4.15	4.15
(m^3/min)	-3.4	-4	4.29	4.28	4.28	4.24	4.19
	-1.3	-2	4.43	4.42	4.41	4.33	4.24
	0.8	0	4.68	4.61	4.54	4.38	4.22
	3.9	3	5.07	4.89	4.71	4.45	4.18
	7.0	6	5.54	5.18	4.82	4.48	4.15
	10.1	9	5.51	5.15	4.80	4.46	4.11
	13.2	12	5.47	5.12	4.77	4.42	4.07
	16.9	15.5	5.43	5.08	4.73	4.38	4.03

Note(1) This data shows average statuses out of those possible to occur in the system control.
(Depending on controls, there may be ranges where the operation is not conducted continuously.)

(2) Symbols are as follows
TC :Total cooling capacity(kW)
SHC :Sensible heat capacity(kW)

Cool mode	Uhi	Hi	Me	Lo
Air flow	14.00	14	12	10
TC	5.60	5.60	4.99	4.32
SHF	0.73	0.73	0.72	0.70

Heat mode	Uhi	Hi	Me	Lo
Air flow	14	14	12	10
Heating capacity	6.30	6.30	5.59	4.82

Model **FDTW71KXE6** Cool Mode

Air flow	Ambient air temp. (°CDB)	Indoor air temperature 21 °CDB 14 °CWB TC	21 °CDB 14 °CWB SHC	23 °CDB 16 °CWB TC	23 °CDB 16 °CWB SHC	26 °CDB 18 °CWB TC	26 °CDB 18 °CWB SHC	27 °CDB 19 °CWB TC	27 °CDB 19 °CWB SHC	28 °CDB 20 °CWB TC	28 °CDB 20 °CWB SHC	31 °CDB 22 °CWB TC	31 °CDB 22 °CWB SHC	33 °CDB 24 °CWB TC	33 °CDB 24 °CWB SHC
Uhi	10			5.82	4.43	6.96	5.02	7.53	5.16	8.01	5.23	8.97	5.64	9.31	5.49
	12			5.82	4.43	6.96	5.02	7.53	5.16	8.00	5.23	8.94	5.63	9.27	5.47
	14			5.82	4.43	6.96	5.02	7.53	5.16	7.99	5.22	8.90	5.61	9.23	5.45
	16			5.82	4.43	6.96	5.02	7.53	5.16	7.97	5.22	8.87	5.60	9.19	5.44
	18			5.82	4.43	6.96	5.02	7.53	5.16	7.96	5.21	8.84	5.59	9.15	5.43
	20			5.82	4.43	6.96	5.02	7.53	5.16	7.95	5.21	8.81	5.57	9.11	5.41
	22			5.81	4.43	6.95	5.02	7.53	5.16	7.92	5.20	8.70	5.53	8.99	5.36
16	24			5.80	4.42	6.95	5.02	7.53	5.16	7.88	5.18	8.58	5.48	8.86	5.31
(m³/min)	26			5.80	4.42	6.92	5.01	7.46	5.12	7.79	5.14	8.45	5.43	8.73	5.27
	28	5.25	4.35	5.79	4.42	6.89	4.99	7.38	5.09	7.69	5.10	8.31	5.37	8.59	5.21
	30	5.25	4.35	5.78	4.41	6.83	4.96	7.31	5.06	7.60	5.05	8.19	5.32	8.46	5.16
	32	5.25	4.35	5.77	4.41	6.78	4.93	7.24	5.02	7.51	5.02	8.06	5.28	8.33	5.12
	34	5.25	4.35	5.75	4.40	6.76	4.92	7.15	4.99	7.39	4.97	7.89	5.21	8.16	5.06
	35	5.25	4.35	5.74	4.40	6.75	4.91	7.10	4.97	7.33	4.94	7.80	5.17	8.08	5.03
	36	5.25	4.35	5.73	4.39	6.69	4.89	7.06	4.95	7.26	4.92	7.66	5.12	7.92	4.97
	38	5.25	4.35	5.72	4.39	6.59	4.85	6.99	4.92	7.12	4.84	7.38	5.01	7.61	4.85
	39	5.25	4.35	5.71	4.38	6.54	4.83	6.96	4.89	7.05	4.81	7.24	4.94	7.45	4.79
	41	5.25	4.35	5.69	4.37	6.35	4.75	6.67	4.77	6.76	4.70	6.92	4.82	7.10	4.69
	43	5.25	4.35	5.67	4.36	6.15	4.66	6.39	4.66	6.46	4.58	6.60	4.72	6.75	4.57

Heat Mode

Air flow	Ambient air temp. DB	Ambient air temp. WB	Indoor air temp. 16 °CDB	18 °CDB	20 °CDB	22 °CDB	24 °CDB
Uhi	-19.8	-20	4.64	4.64	4.64	4.64	4.64
	-17.8	-18	4.94	4.94	4.94	4.94	4.94
	-15.7	-16	5.24	5.24	5.24	5.24	5.24
	-13.7	-14	5.54	5.54	5.54	5.54	5.54
	-11.7	-12	5.83	5.83	5.83	5.83	5.83
	-9.6	-10	6.13	6.13	6.13	6.13	6.13
	-7.5	-8	6.51	6.51	6.51	6.51	6.51
16	-5.5	-6	6.88	6.88	6.88	6.88	6.88
(m³/min)	-3.4	-4	7.12	7.11	7.10	7.03	6.96
	-1.3	-2	7.36	7.34	7.32	7.18	7.04
	0.8	0	7.76	7.65	7.54	7.27	7.00
	3.9	3	8.42	8.12	7.82	7.38	6.94
	7.0	6	9.20	8.60	8.00	7.44	6.88
	10.1	9	9.14	8.56	7.97	7.40	6.82
	13.2	12	9.08	8.50	7.92	7.34	6.76
	16.9	15.5	9.01	8.43	7.85	7.27	6.69

Air flow	Ambient air temp. (°CDB)	Indoor air temperature 21 °CDB 14 °CWB TC	21 °CDB 14 °CWB SHC	23 °CDB 16 °CWB TC	23 °CDB 16 °CWB SHC	26 °CDB 18 °CWB TC	26 °CDB 18 °CWB SHC	27 °CDB 19 °CWB TC	27 °CDB 19 °CWB SHC	28 °CDB 20 °CWB TC	28 °CDB 20 °CWB SHC	31 °CDB 22 °CWB TC	31 °CDB 22 °CWB SHC	33 °CDB 24 °CWB TC	33 °CDB 24 °CWB SHC
Hi	10			5.82	4.43	6.96	5.02	7.53	5.16	8.01	5.23	8.97	5.64	9.31	5.49
	12			5.82	4.43	6.96	5.02	7.53	5.16	8.00	5.23	8.94	5.63	9.27	5.47
	14			5.82	4.43	6.96	5.02	7.53	5.16	7.99	5.22	8.90	5.61	9.23	5.45
	16			5.82	4.43	6.96	5.02	7.53	5.16	7.97	5.22	8.87	5.60	9.19	5.44
	18			5.82	4.43	6.96	5.02	7.53	5.16	7.96	5.21	8.84	5.59	9.15	5.43
	20			5.82	4.43	6.96	5.02	7.53	5.16	7.95	5.21	8.81	5.57	9.11	5.41
	22			5.81	4.43	6.95	5.02	7.53	5.16	7.92	5.20	8.70	5.53	8.99	5.36
16	24			5.80	4.42	6.95	5.02	7.53	5.16	7.88	5.18	8.58	5.48	8.86	5.31
(m³/min)	26			5.80	4.42	6.92	5.01	7.46	5.12	7.79	5.14	8.45	5.43	8.73	5.27
	28	5.25	4.35	5.79	4.42	6.89	4.99	7.38	5.09	7.69	5.10	8.31	5.37	8.59	5.21
	30	5.25	4.35	5.78	4.41	6.83	4.96	7.31	5.06	7.60	5.05	8.19	5.32	8.46	5.16
	32	5.25	4.35	5.77	4.41	6.78	4.93	7.24	5.02	7.51	5.02	8.06	5.28	8.33	5.12
	34	5.25	4.35	5.75	4.40	6.76	4.92	7.15	4.99	7.39	4.97	7.89	5.21	8.16	5.06
	35	5.25	4.35	5.74	4.40	6.75	4.91	7.10	4.97	7.33	4.94	7.80	5.17	8.08	5.03
	36	5.25	4.35	5.73	4.39	6.69	4.89	7.06	4.95	7.26	4.92	7.66	5.12	7.92	4.97
	38	5.25	4.35	5.72	4.39	6.59	4.85	6.99	4.92	7.12	4.84	7.38	5.01	7.61	4.85
	39	5.25	4.35	5.71	4.38	6.54	4.83	6.96	4.89	7.05	4.81	7.24	4.94	7.45	4.79
	41	5.25	4.35	5.69	4.37	6.35	4.75	6.67	4.77	6.76	4.70	6.92	4.82	7.10	4.69
	43	5.25	4.35	5.67	4.36	6.15	4.66	6.39	4.66	6.46	4.58	6.60	4.72	6.75	4.57

Air flow	Ambient air temp. DB	Ambient air temp. WB	Indoor air temp. 16 °CDB	18 °CDB	20 °CDB	22 °CDB	24 °CDB
Hi	-19.8	-20	4.64	4.64	4.64	4.64	4.64
	-17.8	-18	4.94	4.94	4.94	4.94	4.94
	-15.7	-16	5.24	5.24	5.24	5.24	5.24
	-13.7	-14	5.54	5.54	5.54	5.54	5.54
	-11.7	-12	5.83	5.83	5.83	5.83	5.83
	-9.6	-10	6.13	6.13	6.13	6.13	6.13
	-7.5	-8	6.51	6.51	6.51	6.51	6.51
16	-5.5	-6	6.88	6.88	6.88	6.88	6.88
(m³/min)	-3.4	-4	7.12	7.11	7.10	7.03	6.96
	-1.3	-2	7.36	7.34	7.32	7.18	7.04
	0.8	0	7.76	7.65	7.54	7.27	7.00
	3.9	3	8.42	8.12	7.82	7.38	6.94
	7.0	6	9.20	8.60	8.00	7.44	6.88
	10.1	9	9.14	8.56	7.97	7.40	6.82
	13.2	12	9.08	8.50	7.92	7.34	6.76
	16.9	15.5	9.01	8.43	7.85	7.27	6.69

Air flow	Ambient air temp. (°CDB)	Indoor air temperature 21 °CDB 14 °CWB TC	21 °CDB 14 °CWB SHC	23 °CDB 16 °CWB TC	23 °CDB 16 °CWB SHC	26 °CDB 18 °CWB TC	26 °CDB 18 °CWB SHC	27 °CDB 19 °CWB TC	27 °CDB 19 °CWB SHC	28 °CDB 20 °CWB TC	28 °CDB 20 °CWB SHC	31 °CDB 22 °CWB TC	31 °CDB 22 °CWB SHC	33 °CDB 24 °CWB TC	33 °CDB 24 °CWB SHC
Me	10			4.99	3.75	5.97	4.26	6.46	4.37	6.87	4.44	7.69	4.79	7.99	4.65
	12			4.99	3.75	5.97	4.26	6.46	4.37	6.86	4.44	7.67	4.77	7.95	4.64
	14			4.99	3.75	5.97	4.26	6.46	4.37	6.85	4.43	7.64	4.76	7.92	4.63
	16			4.99	3.75	5.97	4.26	6.46	4.37	6.84	4.43	7.61	4.75	7.88	4.61
	18			4.99	3.75	5.97	4.26	6.46	4.37	6.83	4.43	7.58	4.74	7.85	4.60
	20			4.99	3.75	5.97	4.26	6.46	4.37	6.82	4.42	7.55	4.73	7.82	4.59
	22			4.98	3.75	5.97	4.26	6.46	4.37	6.79	4.40	7.46	4.69	7.71	4.55
13	24			4.98	3.75	5.96	4.25	6.46	4.37	6.76	4.39	7.36	4.65	7.60	4.50
(m³/min)	26			4.97	3.74	5.94	4.24	6.39	4.34	6.68	4.36	7.25	4.60	7.49	4.44
	28	4.51	3.69	4.97	3.74	5.91	4.23	6.33	4.31	6.60	4.33	7.13	4.56	7.37	4.40
	30	4.51	3.69	4.96	3.74	5.86	4.20	6.27	4.29	6.52	4.29	7.02	4.50	7.26	4.37
	32	4.51	3.69	4.95	3.73	5.82	4.19	6.21	4.26	6.45	4.26	6.91	4.45	7.15	4.33
	34	4.51	3.69	4.93	3.72	5.80	4.18	6.13	4.22	6.34	4.21	6.77	4.40	7.00	4.28
	35	4.51	3.69	4.92	3.72	5.79	4.17	6.09	4.20	6.29	4.19	6.69	4.37	6.93	4.26
	36	4.51	3.69	4.91	3.71	5.74	4.15	6.06	4.20	6.23	4.17	6.57	4.33	6.79	4.20
	38	4.51	3.69	4.90	3.71	5.65	4.11	6.00	4.16	6.11	4.11	6.33	4.24	6.52	4.11
	39	4.51	3.69	4.90	3.71	5.61	4.09	5.97	4.15	6.05	4.09	6.21	4.19	6.39	4.06
	41	4.51	3.69	4.88	3.70	5.44	4.01	5.72	4.04	5.80	3.98	5.94	4.08	6.09	3.96
	43	4.51	3.69	4.86	3.69	5.27	3.94	5.48	3.94	5.54	3.88	5.66	3.98	5.79	3.86

Air flow	Ambient air temp. DB	Ambient air temp. WB	Indoor air temp. 16 °CDB	18 °CDB	20 °CDB	22 °CDB	24 °CDB
Me	-19.8	-20	3.99	3.99	3.99	3.99	3.99
	-17.8	-18	4.25	4.25	4.25	4.25	4.25
	-15.7	-16	4.50	4.50	4.50	4.50	4.50
	-13.7	-14	4.76	4.76	4.76	4.76	4.76
	-11.7	-12	5.02	5.02	5.02	5.02	5.02
	-9.6	-10	5.27	5.27	5.27	5.27	5.27
	-7.5	-8	5.60	5.60	5.60	5.60	5.60
13	-5.5	-6	5.92	5.92	5.92	5.92	5.92
(m³/min)	-3.4	-4	6.12	6.11	6.11	6.05	5.99
	-1.3	-2	6.33	6.31	6.30	6.17	6.05
	0.8	0	6.67	6.58	6.48	6.25	6.02
	3.9	3	7.24	6.98	6.73	6.35	5.97
	7.0	6	7.91	7.40	6.88	6.40	5.92
	10.1	9	7.86	7.36	6.85	6.36	5.87
	13.2	12	7.81	7.31	6.81	6.31	5.81
	16.9	15.5	7.75	7.25	6.75	6.25	5.75

Air flow	Ambient air temp. (°CDB)	Indoor air temperature 21 °CDB 14 °CWB TC	21 °CDB 14 °CWB SHC	23 °CDB 16 °CWB TC	23 °CDB 16 °CWB SHC	26 °CDB 18 °CWB TC	26 °CDB 18 °CWB SHC	27 °CDB 19 °CWB TC	27 °CDB 19 °CWB SHC	28 °CDB 20 °CWB TC	28 °CDB 20 °CWB SHC	31 °CDB 22 °CWB TC	31 °CDB 22 °CWB SHC	33 °CDB 24 °CWB TC	33 °CDB 24 °CWB SHC
Lo	10			4.39	3.25	5.24	3.69	5.67	3.79	6.03	3.85	6.76	4.16	7.02	4.04
	12			4.39	3.25	5.24	3.69	5.67	3.79	6.03	3.85	6.73	4.14	6.99	4.02
	14			4.39	3.25	5.24	3.69	5.67	3.79	6.02	3.84	6.71	4.14	6.96	4.01
	16			4.39	3.25	5.24	3.69	5.67	3.79	6.01	3.84	6.69	4.13	6.93	4.00
	18			4.39	3.25	5.24	3.69	5.67	3.79	6.00	3.84	6.66	4.12	6.90	3.99
	20			4.39	3.25	5.24	3.69	5.67	3.79	5.99	3.83	6.64	4.10	6.87	3.98
	22			4.38	3.24	5.24	3.69	5.67	3.79	5.96	3.82	6.55	4.07	6.77	3.94
11	24			4.37	3.24	5.24	3.69	5.67	3.79	5.94	3.81	6.47	4.03	6.68	3.90
(m³/min)	26			4.37	3.24	5.21	3.68	5.62	3.77	5.87	3.78	6.37	3.99	6.58	3.87
	28	3.96	3.19	4.37	3.24	5.19	3.67	5.56	3.74	5.80	3.75	6.26	3.95	6.47	3.82
	30	3.96	3.19	4.35	3.23	5.15	3.65	5.51	3.72	5.73	3.72	6.17	3.91	6.38	3.79
	32	3.96	3.19	4.34	3.23	5.11	3.63	5.46	3.70	5.66	3.69	6.07	3.87	6.28	3.74
	34	3.96	3.19	4.33	3.22	5.09	3.62	5.39	3.66	5.57	3.65	5.95	3.81	6.15	3.70
	35	3.96	3.19	4.32	3.22	5.08	3.62	5.35	3.64	5.53	3.63	5.88	3.78	6.09	3.68
	36	3.96	3.19	4.32	3.22	5.04	3.60	5.32	3.64	5.47	3.61	5.78	3.74	5.97	3.64
	38	3.96	3.19	4.31	3.21	4.97	3.56	5.27	3.61	5.37	3.56	5.56	3.66	5.73	3.55
	39	3.96	3.19	4.30	3.21	4.93	3.55	5.24	3.60	5.31	3.54	5.46	3.62	5.61	3.51
	41	3.96	3.19	4.29	3.20	4.78	3.48	5.03	3.51	5.09	3.45	5.22	3.53	5.35	3.42
	43	3.96	3.19	4.27	3.19	4.63	3.41	4.82	3.41	4.87	3.36	4.97	3.43	5.09	3.33

Air flow	Ambient air temp. DB	Ambient air temp. WB	Indoor air temp. 16 °CDB	18 °CDB	20 °CDB	22 °CDB	24 °CDB
Lo	-19.8	-20	3.51	3.51	3.51	3.51	3.51
	-17.8	-18	3.74	3.74	3.74	3.74	3.74
	-15.7	-16	3.97	3.97	3.97	3.97	3.97
	-13.7	-14	4.19	4.19	4.19	4.19	4.19
	-11.7	-12	4.42	4.42	4.42	4.42	4.42
	-9.6	-10	4.65	4.65	4.65	4.65	4.65
	-7.5	-8	4.93	4.93	4.93	4.93	4.93
11	-5.5	-6	5.21	5.21	5.21	5.21	5.21
(m³/min)	-3.4	-4	5.39	5.39	5.38	5.33	5.27
	-1.3	-2	5.58	5.56	5.54	5.44	5.33
	0.8	0	5.88	5.79	5.71	5.51	5.30
	3.9	3	6.38	6.15	5.92	5.59	5.26
	7.0	6	6.97	6.51	6.06	5.64	5.21
	10.1	9	6.92	6.48	6.04	5.60	5.17
	13.2	12	6.88	6.44	6.00	5.56	5.12
	16.9	15.5	6.83	6.39	5.95	5.51	5.07

Note(1) This data shows average statuses out of those possible to occur in the system control.
(Depending on controls, there may be ranges where the operation is not conducted continuously.)
(2) Symbols are as follows
TC :Total cooling capacity(kW)
SHC :Sensible heat capacity(kW)

Cool mode	Uhi	Hi	Me	Lo
Air flow	16.00	16	13	11
TC	7.10	7.10	6.09	5.35
SHF	0.70	0.70	0.69	0.68

Heat mode	Uhi	Hi	Me	Lo
Air flow	16	16	13	11
Heating capacity	8.00	8.00	6.88	6.06

Model **FDTW90KXE6** Cool Mode

Air flow	Ambient air temp. (°CDB)	Indoor air temperature 21 °CDB 14 °CWB TC	21 °CDB 14 °CWB SHC	23 °CDB 16 °CWB TC	23 °CDB 16 °CWB SHC	26 °CDB 18 °CWB TC	26 °CDB 18 °CWB SHC	27 °CDB 19 °CWB TC	27 °CDB 19 °CWB SHC	28 °CDB 20 °CWB TC	28 °CDB 20 °CWB SHC	31 °CDB 22 °CWB TC	31 °CDB 22 °CWB SHC	33 °CDB 24 °CWB TC	33 °CDB 24 °CWB SHC
Uhi	10			7.38	5.46	8.82	6.19	9.54	6.35	10.15	6.48	11.37	6.98	11.80	6.78
	12			7.38	5.46	8.82	6.19	9.54	6.35	10.14	6.47	11.33	6.97	11.75	6.76
	14			7.38	5.46	8.82	6.19	9.54	6.35	10.12	6.47	11.29	6.95	11.70	6.74
	16			7.38	5.46	8.82	6.19	9.54	6.35	10.11	6.46	11.25	6.93	11.65	6.72
	18			7.38	5.46	8.82	6.19	9.54	6.35	10.09	6.45	11.20	6.91	11.60	6.70
	20			7.38	5.46	8.82	6.19	9.54	6.35	10.08	6.45	11.16	6.89	11.55	6.68
	22			7.37	5.46	8.82	6.19	9.54	6.35	10.03	6.42	11.02	6.83	11.39	6.62
19	24			7.36	5.45	8.81	6.19	9.54	6.35	9.99	6.41	10.88	6.77	11.24	6.56
(m^3/min)	26			7.35	5.45	8.77	6.17	9.45	6.32	9.87	6.35	10.71	6.70	11.06	6.49
	28	6.66	5.36	7.34	5.44	8.73	6.16	9.36	6.28	9.75	6.28	10.54	6.63	10.89	6.40
	30	6.66	5.36	7.33	5.44	8.66	6.12	9.27	6.24	9.64	6.24	10.38	6.57	10.73	6.35
	32	6.66	5.36	7.31	5.43	8.60	6.09	9.18	6.21	9.53	6.20	10.22	6.48	10.56	6.29
	34	6.66	5.36	7.28	5.42	8.57	6.08	9.06	6.15	9.37	6.13	10.00	6.40	10.35	6.23
	35	6.66	5.36	7.27	5.41	8.55	6.07	9.00	6.12	9.30	6.11	9.89	6.36	10.24	6.18
	36	6.66	5.36	7.26	5.41	8.49	6.05	8.96	6.11	9.21	6.06	9.72	6.29	10.04	6.10
	38	6.66	5.36	7.25	5.40	8.36	5.98	8.87	6.06	9.03	5.98	9.36	6.15	9.64	5.96
	39	6.66	5.36	7.24	5.40	8.29	5.95	8.82	6.04	8.94	5.95	9.18	6.08	9.44	5.89
	41	6.66	5.36	7.21	5.38	8.04	5.84	8.46	5.89	8.56	5.78	8.77	5.92	9.00	5.73
	43	6.66	5.36	7.19	5.37	7.80	5.73	8.10	5.73	8.19	5.63	8.37	5.77	8.56	5.58

Heat Mode

Air flow	Ambient air temp. DB	Ambient air temp. WB	Indoor air temp. 16 °CDB	18 °CDB	20 °CDB	22 °CDB	24 °CDB
Uhi	-19.8	-20	5.80	5.80	5.80	5.80	5.80
	-17.8	-18	6.17	6.17	6.17	6.17	6.17
	-15.7	-16	6.55	6.55	6.55	6.55	6.55
	-13.7	-14	6.92	6.92	6.92	6.92	6.92
	-11.7	-12	7.29	7.29	7.29	7.29	7.29
	-9.6	-10	7.67	7.67	7.67	7.67	7.67
	-7.5	-8	8.13	8.13	8.13	8.13	8.13
19	-5.5	-6	8.60	8.60	8.60	8.60	8.60
(m^3/min)	-3.4	-4	8.90	8.89	8.88	8.79	8.70
	-1.3	-2	9.20	9.18	9.15	8.98	8.80
	0.8	0	9.70	9.56	9.43	9.09	8.75
	3.9	3	10.53	10.15	9.78	9.23	8.68
	7.0	6	11.50	10.75	10.00	9.30	8.60
	10.1	9	11.43	10.69	9.96	9.24	8.53
	13.2	12	11.35	10.63	9.90	9.18	8.45
	16.9	15.5	11.26	10.54	9.81	9.09	8.36

Air flow	Ambient air temp. (°CDB)	Indoor air temperature 21 °CDB 14 °CWB TC	21 °CDB 14 °CWB SHC	23 °CDB 16 °CWB TC	23 °CDB 16 °CWB SHC	26 °CDB 18 °CWB TC	26 °CDB 18 °CWB SHC	27 °CDB 19 °CWB TC	27 °CDB 19 °CWB SHC	28 °CDB 20 °CWB TC	28 °CDB 20 °CWB SHC	31 °CDB 22 °CWB TC	31 °CDB 22 °CWB SHC	33 °CDB 24 °CWB TC	33 °CDB 24 °CWB SHC
Hi	10			7.38	5.46	8.82	6.19	9.54	6.35	10.15	6.48	11.37	6.98	11.80	6.78
	12			7.38	5.46	8.82	6.19	9.54	6.35	10.14	6.47	11.33	6.97	11.75	6.76
	14			7.38	5.46	8.82	6.19	9.54	6.35	10.12	6.47	11.29	6.95	11.70	6.74
	16			7.38	5.46	8.82	6.19	9.54	6.35	10.11	6.46	11.25	6.93	11.65	6.72
	18			7.38	5.46	8.82	6.19	9.54	6.35	10.09	6.45	11.20	6.91	11.60	6.70
	20			7.38	5.46	8.82	6.19	9.54	6.35	10.08	6.45	11.16	6.89	11.55	6.68
	22			7.37	5.46	8.82	6.19	9.54	6.35	10.03	6.42	11.02	6.83	11.39	6.62
19	24			7.36	5.45	8.81	6.19	9.54	6.35	9.99	6.41	10.88	6.77	11.24	6.56
(m^3/min)	26			7.35	5.45	8.77	6.17	9.45	6.32	9.87	6.35	10.71	6.70	11.06	6.49
	28	6.66	5.36	7.34	5.44	8.73	6.16	9.36	6.28	9.75	6.28	10.54	6.63	10.89	6.40
	30	6.66	5.36	7.33	5.44	8.66	6.12	9.27	6.24	9.64	6.24	10.38	6.57	10.73	6.35
	32	6.66	5.36	7.31	5.43	8.60	6.09	9.18	6.21	9.53	6.20	10.22	6.48	10.56	6.29
	34	6.66	5.36	7.28	5.42	8.57	6.08	9.06	6.15	9.37	6.13	10.00	6.40	10.35	6.23
	35	6.66	5.36	7.27	5.41	8.55	6.07	9.00	6.12	9.30	6.11	9.89	6.36	10.24	6.18
	36	6.66	5.36	7.26	5.41	8.49	6.05	8.96	6.11	9.21	6.06	9.72	6.29	10.04	6.10
	38	6.66	5.36	7.25	5.40	8.36	5.98	8.87	6.06	9.03	5.98	9.36	6.15	9.64	5.96
	39	6.66	5.36	7.24	5.40	8.29	5.95	8.82	6.04	8.94	5.95	9.18	6.08	9.44	5.89
	41	6.66	5.36	7.21	5.38	8.04	5.84	8.46	5.89	8.56	5.78	8.77	5.92	9.00	5.73
	43	6.66	5.36	7.19	5.37	7.80	5.73	8.10	5.73	8.19	5.63	8.37	5.77	8.56	5.58

Air flow	Ambient air temp. DB	Ambient air temp. WB	Indoor air temp. 16 °CDB	18 °CDB	20 °CDB	22 °CDB	24 °CDB
Hi	-19.8	-20	5.80	5.80	5.80	5.80	5.80
	-17.8	-18	6.17	6.17	6.17	6.17	6.17
	-15.7	-16	6.55	6.55	6.55	6.55	6.55
	-13.7	-14	6.92	6.92	6.92	6.92	6.92
	-11.7	-12	7.29	7.29	7.29	7.29	7.29
	-9.6	-10	7.67	7.67	7.67	7.67	7.67
	-7.5	-8	8.13	8.13	8.13	8.13	8.13
19	-5.5	-6	8.60	8.60	8.60	8.60	8.60
(m^3/min)	-3.4	-4	8.90	8.89	8.88	8.79	8.70
	-1.3	-2	9.20	9.18	9.15	8.98	8.80
	0.8	0	9.70	9.56	9.43	9.09	8.75
	3.9	3	10.53	10.15	9.78	9.23	8.68
	7.0	6	11.50	10.75	10.00	9.30	8.60
	10.1	9	11.43	10.69	9.96	9.24	8.53
	13.2	12	11.35	10.63	9.90	9.18	8.45
	16.9	15.5	11.26	10.54	9.81	9.09	8.36

Air flow	Ambient air temp. (°CDB)	Indoor air temperature 21 °CDB 14 °CWB TC	21 °CDB 14 °CWB SHC	23 °CDB 16 °CWB TC	23 °CDB 16 °CWB SHC	26 °CDB 18 °CWB TC	26 °CDB 18 °CWB SHC	27 °CDB 19 °CWB TC	27 °CDB 19 °CWB SHC	28 °CDB 20 °CWB TC	28 °CDB 20 °CWB SHC	31 °CDB 22 °CWB TC	31 °CDB 22 °CWB SHC	33 °CDB 24 °CWB TC	33 °CDB 24 °CWB SHC
Me	10			6.56	4.78	7.84	5.43	8.48	5.59	9.02	5.69	10.11	6.13	10.49	5.94
	12			6.56	4.78	7.84	5.43	8.48	5.59	9.01	5.68	10.07	6.11	10.45	5.93
	14			6.56	4.78	7.84	5.43	8.48	5.59	9.00	5.68	10.03	6.10	10.40	5.91
	16			6.56	4.78	7.84	5.43	8.48	5.59	8.99	5.67	10.00	6.08	10.36	5.90
	18			6.56	4.78	7.84	5.43	8.48	5.59	8.97	5.65	9.96	6.06	10.31	5.87
	20			6.56	4.78	7.84	5.43	8.48	5.59	8.96	5.65	9.92	6.05	10.27	5.86
	22			6.55	4.77	7.84	5.43	8.48	5.59	8.92	5.63	9.80	5.99	10.13	5.80
16	24			6.54	4.77	7.83	5.42	8.48	5.59	8.88	5.61	9.67	5.94	9.99	5.75
(m^3/min)	26			6.53	4.76	7.80	5.41	8.40	5.55	8.77	5.57	9.52	5.88	9.83	5.68
	28	5.92	4.69	6.53	4.76	7.76	5.39	8.32	5.51	8.67	5.53	9.37	5.81	9.68	5.61
	30	5.92	4.69	6.51	4.75	7.70	5.37	8.24	5.48	8.57	5.48	9.22	5.73	9.54	5.57
	32	5.92	4.69	6.50	4.75	7.64	5.34	8.16	5.44	8.47	5.44	9.08	5.68	9.39	5.52
	34	5.92	4.69	6.47	4.73	7.61	5.32	8.05	5.39	8.33	5.37	8.89	5.61	9.20	5.44
	35	5.92	4.69	6.46	4.73	7.60	5.32	8.00	5.36	8.26	5.35	8.79	5.56	9.10	5.41
	36	5.92	4.69	6.46	4.73	7.54	5.29	7.96	5.35	8.19	5.31	8.64	5.51	8.92	5.34
	38	5.92	4.69	6.44	4.72	7.43	5.24	7.88	5.32	8.03	5.24	8.32	5.38	8.57	5.21
	39	5.92	4.69	6.43	4.72	7.37	5.21	7.84	5.29	7.95	5.21	8.16	5.31	8.39	5.14
	41	5.92	4.69	6.41	4.71	7.15	5.11	7.52	5.15	7.61	5.06	7.80	5.17	8.00	5.01
	43	5.92	4.69	6.39	4.70	6.93	5.01	7.20	5.01	7.28	4.92	7.44	5.03	7.61	4.85

Air flow	Ambient air temp. DB	Ambient air temp. WB	Indoor air temp. 16 °CDB	18 °CDB	20 °CDB	22 °CDB	24 °CDB
Me	-19.8	-20	5.16	5.16	5.16	5.16	5.16
	-17.8	-18	5.49	5.49	5.49	5.49	5.49
	-15.7	-16	5.83	5.83	5.83	5.83	5.83
	-13.7	-14	6.16	6.16	6.16	6.16	6.16
	-11.7	-12	6.49	6.49	6.49	6.49	6.49
	-9.6	-10	6.82	6.82	6.82	6.82	6.82
	-7.5	-8	7.24	7.24	7.24	7.24	7.24
16	-5.5	-6	7.65	7.65	7.65	7.65	7.65
(m^3/min)	-3.4	-4	7.92	7.91	7.90	7.82	7.74
	-1.3	-2	8.19	8.17	8.14	7.99	7.83
	0.8	0	8.63	8.51	8.39	8.09	7.79
	3.9	3	9.37	9.03	8.70	8.21	7.72
	7.0	6	10.24	9.57	8.90	8.28	7.65
	10.1	9	10.17	9.52	8.87	8.23	7.59
	13.2	12	10.10	9.46	8.81	8.17	7.52
	16.9	15.5	10.02	9.38	8.73	8.09	7.44

Air flow	Ambient air temp. (°CDB)	Indoor air temperature 21 °CDB 14 °CWB TC	21 °CDB 14 °CWB SHC	23 °CDB 16 °CWB TC	23 °CDB 16 °CWB SHC	26 °CDB 18 °CWB TC	26 °CDB 18 °CWB SHC	27 °CDB 19 °CWB TC	27 °CDB 19 °CWB SHC	28 °CDB 20 °CWB TC	28 °CDB 20 °CWB SHC	31 °CDB 22 °CWB TC	31 °CDB 22 °CWB SHC	33 °CDB 24 °CWB TC	33 °CDB 24 °CWB SHC
Lo	10			5.30	3.81	6.33	4.33	6.85	4.46	7.29	4.54	8.16	4.89	8.47	4.74
	12			5.30	3.81	6.33	4.33	6.85	4.46	7.28	4.54	8.13	4.88	8.44	4.73
	14			5.30	3.81	6.33	4.33	6.85	4.46	7.27	4.53	8.10	4.87	8.40	4.72
	16			5.30	3.81	6.33	4.33	6.85	4.46	7.26	4.53	8.07	4.85	8.36	4.70
	18			5.30	3.81	6.33	4.33	6.85	4.46	7.25	4.52	8.04	4.84	8.33	4.69
	20			5.30	3.81	6.33	4.33	6.85	4.46	7.24	4.52	8.01	4.83	8.29	4.67
	22			5.29	3.81	6.33	4.33	6.85	4.46	7.20	4.50	7.91	4.78	8.18	4.63
12	24			5.28	3.80	6.33	4.33	6.85	4.46	7.17	4.49	7.81	4.74	8.06	4.58
(m^3/min)	26			5.28	3.80	6.30	4.32	6.78	4.43	7.08	4.44	7.69	4.68	7.94	4.53
	28	4.78	3.73	5.27	3.80	6.27	4.30	6.72	4.40	7.00	4.41	7.56	4.63	7.82	4.49
	30	4.78	3.73	5.26	3.79	6.22	4.27	6.65	4.37	6.92	4.38	7.45	4.58	7.70	4.44
	32	4.78	3.73	5.25	3.79	6.17	4.25	6.59	4.34	6.84	4.34	7.33	4.53	7.58	4.37
	34	4.78	3.73	5.23	3.78	6.15	4.24	6.50	4.30	6.73	4.29	7.18	4.46	7.43	4.32
	35	4.78	3.73	5.22	3.77	6.14	4.24	6.46	4.26	6.67	4.26	7.10	4.42	7.35	4.29
	36	4.78	3.73	5.21	3.76	6.09	4.22	6.43	4.27	6.61	4.23	6.97	4.37	7.20	4.24
	38	4.78	3.73	5.20	3.76	6.00	4.17	6.36	4.23	6.48	4.17	6.72	4.28	6.92	4.14
	39	4.78	3.73	5.19	3.76	5.95	4.15	6.33	4.22	6.42	4.15	6.59	4.22	6.78	4.09
	41	4.78	3.73	5.18	3.75	5.77	4.06	6.07	4.10	6.15	4.03	6.30	4.11	6.46	3.97
	43	4.78	3.73	5.16	3.74	5.60	3.98	5.81	3.98	5.88	3.91	6.01	3.99	6.14	3.85

Air flow	Ambient air temp. DB	Ambient air temp. WB	Indoor air temp. 16 °CDB	18 °CDB	20 °CDB	22 °CDB	24 °CDB
Lo	-19.8	-20	4.18	4.18	4.18	4.18	4.18
	-17.8	-18	4.45	4.45	4.45	4.45	4.45
	-15.7	-16	4.72	4.72	4.72	4.72	4.72
	-13.7	-14	4.99	4.99	4.99	4.99	4.99
	-11.7	-12	5.26	5.26	5.26	5.26	5.26
	-9.6	-10	5.53	5.53	5.53	5.53	5.53
	-7.5	-8	5.86	5.86	5.86	5.86	5.86
12	-5.5	-6	6.20	6.20	6.20	6.20	6.20
(m^3/min)	-3.4	-4	6.42	6.41	6.40	6.34	6.27
	-1.3	-2	6.63	6.62	6.60	6.47	6.34
	0.8	0	6.99	6.89	6.80	6.55	6.31
	3.9	3	7.59	7.32	7.05	6.65	6.25
	7.0	6	8.29	7.75	7.21	6.71	6.20
	10.1	9	8.24	7.71	7.18	6.66	6.15
	13.2	12	8.18	7.66	7.14	6.62	6.09
	16.9	15.5	8.12	7.60	7.07	6.55	6.03

Note(1) This data shows average statuses out of those possible to occur in the system control.
(Depending on controls, there may be ranges where the operation is not conducted continuously.)
(2) Symbols are as follows
TC :Total cooling capacity(kW)
SHC :Sensible heat capacity(kW)

Cool mode	Uhi	Hi	Me	Lo
Air flow	19.00	19	16	12
TC	9.00	9.00	8.00	6.46
SHF	0.68	0.68	0.67	0.66

Heat mode	Uhi	Hi	Me	Lo
Air flow	19	19	16	12
Heating capacity	10.00	10.00	8.90	7.21

Model **FDTW112KXE6** Cool Mode

Air flow	Ambient air temp. (°CDB)	Indoor air temperature 21 °CDB 14 °CWB TC	21 °CDB 14 °CWB SHC	23 °CDB 16 °CWB TC	23 °CDB 16 °CWB SHC	26 °CDB 18 °CWB TC	26 °CDB 18 °CWB SHC	27 °CDB 19 °CWB TC	27 °CDB 19 °CWB SHC	28 °CDB 20 °CWB TC	28 °CDB 20 °CWB SHC	31 °CDB 22 °CWB TC	31 °CDB 22 °CWB SHC	33 °CDB 24 °CWB TC	33 °CDB 24 °CWB SHC
Uhi	10			9.18	7.30	10.97	8.28	11.87	8.49	12.63	8.60	14.15	9.29	14.69	9.01
	12			9.18	7.30	10.97	8.28	11.87	8.49	12.61	8.60	14.10	9.27	14.63	8.99
	14			9.18	7.30	10.97	8.28	11.87	8.49	12.60	8.59	14.05	9.25	14.56	8.96
	16			9.18	7.30	10.97	8.28	11.87	8.49	12.58	8.58	14.00	9.23	14.50	8.94
	18			9.18	7.30	10.97	8.28	11.87	8.49	12.56	8.58	13.94	9.20	14.44	8.92
	20			9.18	7.30	10.97	8.28	11.87	8.49	12.55	8.57	13.89	9.15	14.37	8.90
	22			9.17	7.30	10.97	8.28	11.87	8.49	12.49	8.55	13.72	9.09	14.18	8.84
28	24			9.15	7.29	10.97	8.28	11.87	8.49	12.43	8.51	13.54	9.02	13.98	8.77
(m³/min)	26			9.15	7.29	10.92	8.26	11.76	8.44	12.28	8.46	13.33	8.95	13.77	8.70
	28	8.29	7.21	9.14	7.29	10.86	8.24	11.65	8.39	12.14	8.40	13.11	8.87	13.55	8.64
	30	8.29	7.21	9.12	7.28	10.78	8.20	11.54	8.34	12.00	8.33	12.91	8.80	13.35	8.57
	32	8.29	7.21	9.09	7.26	10.70	8.17	11.42	8.30	11.85	8.28	12.71	8.73	13.15	8.49
	34	8.29	7.21	9.06	7.25	10.66	8.15	11.27	8.24	11.66	8.20	12.45	8.63	12.87	8.40
	35	8.29	7.21	9.05	7.25	10.64	8.15	11.20	8.18	11.57	8.17	12.31	8.58	12.74	8.36
	36	8.29	7.21	9.04	7.24	10.56	8.11	11.14	8.17	11.46	8.12	12.09	8.50	12.49	8.27
	38	8.29	7.21	9.02	7.24	10.40	8.04	11.03	8.13	11.24	8.03	11.65	8.33	12.00	8.10
	39	8.29	7.21	9.00	7.23	10.32	8.00	10.98	8.11	11.13	7.99	11.43	8.24	11.75	8.02
	41	8.29	7.21	8.97	7.21	10.01	7.88	10.53	7.92	10.66	7.80	10.92	8.07	11.20	7.83
	43	8.29	7.21	8.94	7.20	9.70	7.74	10.08	7.73	10.19	7.62	10.41	7.88	10.65	7.65

Heat Mode

Air flow	Ambient air temp. DB	Ambient air temp. WB	Indoor air temp. 16 °CDB	18 °CDB	20 °CDB	22 °CDB	24 °CDB
Uhi	-19.8	-20	7.25	7.25	7.25	7.25	7.25
	-17.8	-18	7.72	7.72	7.72	7.72	7.72
	-15.7	-16	8.18	8.18	8.18	8.18	8.18
	-13.7	-14	8.65	8.65	8.65	8.65	8.65
	-11.7	-12	9.12	9.12	9.12	9.12	9.12
	-9.6	-10	9.58	9.58	9.58	9.58	9.58
	-7.5	-8	10.17	10.17	10.17	10.17	10.17
28	-5.5	-6	10.75	10.75	10.75	10.75	10.75
(m³/min)	-3.4	-4	11.13	11.11	11.09	10.98	10.88
	-1.3	-2	11.50	11.47	11.44	11.22	11.00
	0.8	0	12.13	11.95	11.78	11.36	10.94
	3.9	3	13.16	12.69	12.22	11.53	10.84
	7.0	6	14.38	13.44	12.50	11.63	10.75
	10.1	9	14.28	13.37	12.45	11.55	10.66
	13.2	12	14.19	13.28	12.38	11.47	10.56
	16.9	15.5	14.08	13.17	12.27	11.36	10.45

Air flow	Ambient air temp. (°CDB)	Indoor air temperature 21 °CDB 14 °CWB TC	21 °CDB 14 °CWB SHC	23 °CDB 16 °CWB TC	23 °CDB 16 °CWB SHC	26 °CDB 18 °CWB TC	26 °CDB 18 °CWB SHC	27 °CDB 19 °CWB TC	27 °CDB 19 °CWB SHC	28 °CDB 20 °CWB TC	28 °CDB 20 °CWB SHC	31 °CDB 22 °CWB TC	31 °CDB 22 °CWB SHC	33 °CDB 24 °CWB TC	33 °CDB 24 °CWB SHC
Hi	10			9.18	7.30	10.97	8.28	11.87	8.49	12.63	8.60	14.15	9.29	14.69	9.01
	12			9.18	7.30	10.97	8.28	11.87	8.49	12.61	8.60	14.10	9.27	14.63	8.99
	14			9.18	7.30	10.97	8.28	11.87	8.49	12.60	8.59	14.05	9.25	14.56	8.96
	16			9.18	7.30	10.97	8.28	11.87	8.49	12.58	8.58	14.00	9.23	14.50	8.94
	18			9.18	7.30	10.97	8.28	11.87	8.49	12.56	8.58	13.94	9.20	14.44	8.92
	20			9.18	7.30	10.97	8.28	11.87	8.49	12.55	8.57	13.89	9.15	14.37	8.90
	22			9.17	7.30	10.97	8.28	11.87	8.49	12.49	8.55	13.72	9.09	14.18	8.84
28	24			9.15	7.29	10.97	8.28	11.87	8.49	12.43	8.51	13.54	9.02	13.98	8.77
(m³/min)	26			9.15	7.29	10.92	8.26	11.76	8.44	12.28	8.46	13.33	8.95	13.77	8.70
	28	8.29	7.21	9.14	7.29	10.86	8.24	11.65	8.39	12.14	8.40	13.11	8.87	13.55	8.64
	30	8.29	7.21	9.12	7.28	10.78	8.20	11.54	8.34	12.00	8.33	12.91	8.80	13.35	8.57
	32	8.29	7.21	9.09	7.26	10.70	8.17	11.42	8.30	11.85	8.28	12.71	8.73	13.15	8.49
	34	8.29	7.21	9.06	7.25	10.66	8.15	11.27	8.24	11.66	8.20	12.45	8.63	12.87	8.40
	35	8.29	7.21	9.05	7.25	10.64	8.15	11.20	8.18	11.57	8.17	12.31	8.58	12.74	8.36
	36	8.29	7.21	9.04	7.24	10.56	8.11	11.14	8.17	11.46	8.12	12.09	8.50	12.49	8.27
	38	8.29	7.21	9.02	7.24	10.40	8.04	11.03	8.13	11.24	8.03	11.65	8.33	12.00	8.10
	39	8.29	7.21	9.00	7.23	10.32	8.00	10.98	8.11	11.13	7.99	11.43	8.24	11.75	8.02
	41	8.29	7.21	8.97	7.21	10.01	7.88	10.53	7.92	10.66	7.80	10.92	8.07	11.20	7.83
	43	8.29	7.21	8.94	7.20	9.70	7.74	10.08	7.73	10.19	7.62	10.41	7.88	10.65	7.65

Air flow	Ambient air temp. DB	Ambient air temp. WB	Indoor air temp. 16 °CDB	18 °CDB	20 °CDB	22 °CDB	24 °CDB
Hi	-19.8	-20	7.25	7.25	7.25	7.25	7.25
	-17.8	-18	7.72	7.72	7.72	7.72	7.72
	-15.7	-16	8.18	8.18	8.18	8.18	8.18
	-13.7	-14	8.65	8.65	8.65	8.65	8.65
	-11.7	-12	9.12	9.12	9.12	9.12	9.12
	-9.6	-10	9.58	9.58	9.58	9.58	9.58
	-7.5	-8	10.17	10.17	10.17	10.17	10.17
28	-5.5	-6	10.75	10.75	10.75	10.75	10.75
(m³/min)	-3.4	-4	11.13	11.11	11.09	10.98	10.88
	-1.3	-2	11.50	11.47	11.44	11.22	11.00
	0.8	0	12.13	11.95	11.78	11.36	10.94
	3.9	3	13.16	12.69	12.22	11.53	10.84
	7.0	6	14.38	13.44	12.50	11.63	10.75
	10.1	9	14.28	13.37	12.45	11.55	10.66
	13.2	12	14.19	13.28	12.38	11.47	10.56
	16.9	15.5	14.08	13.17	12.27	11.36	10.45

Air flow	Ambient air temp. (°CDB)	Indoor air temperature 21 °CDB 14 °CWB TC	21 °CDB 14 °CWB SHC	23 °CDB 16 °CWB TC	23 °CDB 16 °CWB SHC	26 °CDB 18 °CWB TC	26 °CDB 18 °CWB SHC	27 °CDB 19 °CWB TC	27 °CDB 19 °CWB SHC	28 °CDB 20 °CWB TC	28 °CDB 20 °CWB SHC	31 °CDB 22 °CWB TC	31 °CDB 22 °CWB SHC	33 °CDB 24 °CWB TC	33 °CDB 24 °CWB SHC
Me	10			8.48	6.67	10.13	7.54	10.96	7.73	11.66	7.84	13.06	8.46	13.56	8.23
	12			8.48	6.67	10.13	7.54	10.96	7.73	11.65	7.84	13.01	8.44	13.50	8.21
	14			8.48	6.67	10.13	7.54	10.96	7.73	11.63	7.83	12.97	8.43	13.45	8.19
	16			8.48	6.67	10.13	7.54	10.96	7.73	11.61	7.82	12.92	8.41	13.39	8.17
	18			8.48	6.67	10.13	7.54	10.96	7.73	11.60	7.82	12.87	8.38	13.33	8.15
	20			8.48	6.67	10.13	7.54	10.96	7.73	11.58	7.81	12.83	8.36	13.27	8.13
	22			8.46	6.66	10.13	7.54	10.96	7.73	11.53	7.78	12.66	8.30	13.09	8.03
25	24			8.45	6.65	10.12	7.54	10.96	7.73	11.47	7.76	12.50	8.24	12.91	7.97
(m³/min)	26			8.44	6.65	10.08	7.52	10.86	7.68	11.34	7.71	12.30	8.13	12.71	7.91
	28	7.65	6.55	8.44	6.65	10.03	7.50	10.75	7.64	11.20	7.65	12.11	8.06	12.51	7.84
	30	7.65	6.55	8.42	6.64	9.95	7.47	10.65	7.60	11.07	7.59	11.92	8.00	12.32	7.78
	32	7.65	6.55	8.40	6.63	9.87	7.44	10.55	7.56	10.94	7.54	11.74	7.93	12.14	7.72
	34	7.65	6.55	8.37	6.62	9.84	7.42	10.41	7.49	10.77	7.48	11.49	7.84	11.89	7.64
	35	7.65	6.55	8.35	6.61	9.82	7.40	10.34	7.44	10.68	7.43	11.37	7.80	11.76	7.59
	36	7.65	6.55	8.34	6.61	9.75	7.38	10.29	7.44	10.58	7.39	11.16	7.72	11.53	7.51
	38	7.65	6.55	8.32	6.60	9.60	7.31	10.18	7.40	10.37	7.31	10.75	7.56	11.08	7.36
	39	7.65	6.55	8.31	6.59	9.53	7.29	10.13	7.38	10.27	7.26	10.55	7.49	10.85	7.29
	41	7.65	6.55	8.28	6.58	9.24	7.16	9.72	7.21	9.84	7.10	10.08	7.32	10.34	7.11
	43	7.65	6.55	8.25	6.54	8.96	7.04	9.31	7.04	9.41	6.93	9.61	7.15	9.83	6.94

Air flow	Ambient air temp. DB	Ambient air temp. WB	Indoor air temp. 16 °CDB	18 °CDB	20 °CDB	22 °CDB	24 °CDB
Me	-19.8	-20	6.68	6.68	6.68	6.68	6.68
	-17.8	-18	7.11	7.11	7.11	7.11	7.11
	-15.7	-16	7.54	7.54	7.54	7.54	7.54
	-13.7	-14	7.97	7.97	7.97	7.97	7.97
	-11.7	-12	8.40	8.40	8.40	8.40	8.40
	-9.6	-10	8.83	8.83	8.83	8.83	8.83
	-7.5	-8	9.37	9.37	9.37	9.37	9.37
25	-5.5	-6	9.91	9.91	9.91	9.91	9.91
(m³/min)	-3.4	-4	10.25	10.24	10.22	10.12	10.02
	-1.3	-2	10.60	10.57	10.54	10.34	10.14
	0.8	0	11.17	11.02	10.86	10.47	10.08
	3.9	3	12.12	11.69	11.26	10.63	9.99
	7.0	6	13.25	12.38	11.52	10.71	9.91
	10.1	9	13.16	12.32	11.48	10.65	9.82
	13.2	12	13.08	12.24	11.40	10.57	9.73
	16.9	15.5	12.97	12.14	11.30	10.47	9.63

Air flow	Ambient air temp. (°CDB)	Indoor air temperature 21 °CDB 14 °CWB TC	21 °CDB 14 °CWB SHC	23 °CDB 16 °CWB TC	23 °CDB 16 °CWB SHC	26 °CDB 18 °CWB TC	26 °CDB 18 °CWB SHC	27 °CDB 19 °CWB TC	27 °CDB 19 °CWB SHC	28 °CDB 20 °CWB TC	28 °CDB 20 °CWB SHC	31 °CDB 22 °CWB TC	31 °CDB 22 °CWB SHC	33 °CDB 24 °CWB TC	33 °CDB 24 °CWB SHC
Lo	10			8.00	6.26	9.56	7.08	10.35	7.26	11.01	7.36	12.33	7.92	12.80	7.71
	12			8.00	6.26	9.56	7.08	10.35	7.26	10.99	7.36	12.28	7.90	12.75	7.69
	14			8.00	6.26	9.56	7.08	10.35	7.26	10.98	7.35	12.24	7.89	12.69	7.67
	16			8.00	6.26	9.56	7.08	10.35	7.26	10.96	7.34	12.20	7.87	12.64	7.66
	18			8.00	6.26	9.56	7.08	10.35	7.26	10.95	7.34	12.15	7.85	12.58	7.64
	20			8.00	6.26	9.56	7.08	10.35	7.26	10.93	7.33	12.11	7.84	12.53	7.62
	22			7.99	6.25	9.56	7.08	10.35	7.26	10.88	7.30	11.95	7.78	12.36	7.56
23	24			7.98	6.25	9.56	7.08	10.35	7.26	10.83	7.28	11.80	7.72	12.18	7.50
(m³/min)	26			7.97	6.24	9.51	7.05	10.25	7.21	10.70	7.23	11.61	7.65	12.00	7.43
	28	7.22	6.16	7.96	6.24	9.47	7.04	10.15	7.17	10.58	7.18	11.43	7.58	11.81	7.37
	30	7.22	6.16	7.94	6.23	9.39	7.00	10.05	7.13	10.45	7.12	11.25	7.51	11.63	7.31
	32	7.22	6.16	7.93	6.23	9.32	6.98	9.96	7.09	10.33	7.08	11.08	7.45	11.46	7.24
	34	7.22	6.16	7.90	6.21	9.29	6.96	9.83	7.03	10.17	7.01	10.85	7.36	11.22	7.16
	35	7.22	6.16	7.89	6.20	9.27	6.95	9.76	6.93	10.08	6.98	10.73	7.31	11.10	7.11
	36	7.22	6.16	7.88	6.20	9.20	6.92	9.71	6.98	9.99	6.93	10.54	7.24	10.89	7.04
	38	7.22	6.16	7.86	6.19	9.06	6.86	9.61	6.94	9.79	6.86	10.15	7.10	10.45	6.89
	39	7.22	6.16	7.85	6.18	8.99	6.83	9.56	6.92	9.70	6.82	9.96	7.02	10.24	6.82
	41	7.22	6.16	7.82	6.17	8.72	6.72	9.17	6.75	9.29	6.66	9.52	6.85	9.76	6.66
	43	7.22	6.16	7.79	6.16	8.45	6.57	8.78	6.59	8.88	6.47	9.07	6.70	9.28	6.49

Air flow	Ambient air temp. DB	Ambient air temp. WB	Indoor air temp. 16 °CDB	18 °CDB	20 °CDB	22 °CDB	24 °CDB
Lo	-19.8	-20	6.28	6.28	6.28	6.28	6.28
	-17.8	-18	6.69	6.69	6.69	6.69	6.69
	-15.7	-16	7.09	7.09	7.09	7.09	7.09
	-13.7	-14	7.49	7.49	7.49	7.49	7.49
	-11.7	-12	7.90	7.90	7.90	7.90	7.90
	-9.6	-10	8.30	8.30	8.30	8.30	8.30
	-7.5	-8	8.81	8.81	8.81	8.81	8.81
23	-5.5	-6	9.31	9.31	9.31	9.31	9.31
(m³/min)	-3.4	-4	9.64	9.63	9.61	9.52	9.42
	-1.3	-2	9.96	9.94	9.91	9.72	9.53
	0.8	0	10.51	10.36	10.21	9.84	9.48
	3.9	3	11.40	10.99	10.59	9.99	9.40
	7.0	6	12.45	11.64	10.83	10.07	9.31
	10.1	9	12.37	11.58	10.79	10.01	9.23
	13.2	12	12.29	11.51	10.72	9.94	9.15
	16.9	15.5	12.20	11.41	10.63	9.84	9.06

Note(1) This data shows average statuses out of those possible to occur in the system control.
(Depending on controls, there may be ranges where the operation is not conducted continuously.)
(2) Symbols are as follows
TC :Total cooling capacity(kW)
SHC :Sensible heat capacity(kW)

Cool mode	Uhi	Hi	Me	Lo
Air flow	28.00	28	25	23
TC	11.20	11.20	10.34	9.76
SHF	0.73	0.73	0.72	0.71

Heat mode	Uhi	Hi	Me	Lo
Air flow	28	28	25	23
Heating capacity	12.50	12.50	11.52	10.83

Model **FDTW140KXE6** Cool Mode

Air flow	Ambient air temp. (°CDB)	Indoor air temperature 21 °CDB 14 °CWB TC	21 °CDB 14 °CWB SHC	23 °CDB 16 °CWB TC	23 °CDB 16 °CWB SHC	26 °CDB 18 °CWB TC	26 °CDB 18 °CWB SHC	27 °CDB 19 °CWB TC	27 °CDB 19 °CWB SHC	28 °CDB 20 °CWB TC	28 °CDB 20 °CWB SHC	31 °CDB 22 °CWB TC	31 °CDB 22 °CWB SHC	33 °CDB 24 °CWB TC	33 °CDB 24 °CWB SHC
Uhi	10			11.48	8.75	13.72	9.91	14.84	10.17	15.79	10.33	17.69	11.14	18.36	10.79
	12			11.48	8.75	13.72	9.91	14.84	10.17	15.77	10.33	17.62	11.11	18.28	10.76
	14			11.48	8.75	13.72	9.91	14.84	10.17	15.75	10.32	17.56	11.09	18.20	10.74
	16			11.48	8.75	13.72	9.91	14.84	10.17	15.72	10.31	17.49	11.06	18.13	10.71
	18			11.48	8.75	13.72	9.91	14.84	10.17	15.70	10.30	17.43	11.03	18.05	10.69
	20			11.48	8.75	13.72	9.91	14.84	10.17	15.68	10.29	17.37	10.97	17.97	10.66
	22			11.46	8.72	13.71	9.91	14.84	10.17	15.61	10.25	17.15	10.89	17.72	10.58
32	24			11.44	8.71	13.71	9.91	14.84	10.17	15.54	10.22	16.93	10.81	17.48	10.50
(m^3/min)	26			11.43	8.70	13.64	9.88	14.70	10.11	15.35	10.15	16.66	10.71	17.21	10.39
	28	10.36	8.59	11.42	8.70	13.58	9.85	14.56	10.04	15.17	10.06	16.39	10.60	16.94	10.31
	30	10.36	8.59	11.40	8.69	13.48	9.80	14.42	9.99	14.99	9.99	16.14	10.51	16.69	10.21
	32	10.36	8.59	11.37	8.68	13.37	9.75	14.28	9.93	14.82	9.91	15.89	10.41	16.43	10.11
	34	10.36	8.59	11.33	8.66	13.32	9.73	14.09	9.84	14.58	9.82	15.56	10.28	16.09	9.98
	35	10.36	8.59	11.31	8.65	13.30	9.72	14.00	9.80	14.46	9.76	15.39	10.22	15.92	9.93
	36	10.36	8.59	11.30	8.64	13.20	9.68	13.93	9.77	14.32	9.70	15.11	10.10	15.61	9.81
	38	10.36	8.59	11.27	8.63	13.00	9.59	13.79	9.70	14.05	9.58	14.56	9.89	15.00	9.60
	39	10.36	8.59	11.26	8.63	12.90	9.54	13.72	9.68	13.91	9.53	14.28	9.78	14.69	9.49
	41	10.36	8.59	11.22	8.61	12.51	9.37	13.16	9.44	13.32	9.29	13.65	9.55	14.00	9.22
	43	10.36	8.59	11.18	8.59	12.13	9.20	12.60	9.21	12.74	9.05	13.02	9.28	13.31	9.01

Heat Mode

Air flow	Ambient air temp. DB	Ambient air temp. WB	Indoor air temp. 16 °CDB	18 °CDB	20 °CDB	22 °CDB	24 °CDB
Uhi	-19.8	-20	9.28	9.28	9.28	9.28	9.28
	-17.8	-18	9.88	9.88	9.88	9.88	9.88
	-15.7	-16	10.47	10.47	10.47	10.47	10.47
	-13.7	-14	11.07	11.07	11.07	11.07	11.07
	-11.7	-12	11.67	11.67	11.67	11.67	11.67
	-9.6	-10	12.27	12.27	12.27	12.27	12.27
	-7.5	-8	13.01	13.01	13.01	13.01	13.01
32	-5.5	-6	13.76	13.76	13.76	13.76	13.76
(m^3/min)	-3.4	-4	14.24	14.22	14.20	14.06	13.92
	-1.3	-2	14.72	14.68	14.64	14.36	14.08
	0.8	0	15.52	15.30	15.08	14.54	14.00
	3.9	3	16.84	16.24	15.64	14.76	13.88
	7.0	6	18.40	17.20	16.00	14.88	13.76
	10.1	9	18.28	17.11	15.94	14.79	13.64
	13.2	12	18.16	17.00	15.84	14.68	13.52
	16.9	15.5	18.02	16.86	15.70	14.54	13.38

Air flow	Ambient air temp. (°CDB)	Indoor air temperature 21 °CDB 14 °CWB TC	21 °CDB 14 °CWB SHC	23 °CDB 16 °CWB TC	23 °CDB 16 °CWB SHC	26 °CDB 18 °CWB TC	26 °CDB 18 °CWB SHC	27 °CDB 19 °CWB TC	27 °CDB 19 °CWB SHC	28 °CDB 20 °CWB TC	28 °CDB 20 °CWB SHC	31 °CDB 22 °CWB TC	31 °CDB 22 °CWB SHC	33 °CDB 24 °CWB TC	33 °CDB 24 °CWB SHC
Hi	10			11.48	8.75	13.72	9.91	14.84	10.17	15.79	10.33	17.69	11.14	18.36	10.79
	12			11.48	8.75	13.72	9.91	14.84	10.17	15.77	10.33	17.62	11.11	18.28	10.76
	14			11.48	8.75	13.72	9.91	14.84	10.17	15.75	10.32	17.56	11.09	18.20	10.74
	16			11.48	8.75	13.72	9.91	14.84	10.17	15.72	10.31	17.49	11.06	18.13	10.71
	18			11.48	8.75	13.72	9.91	14.84	10.17	15.70	10.30	17.43	11.03	18.05	10.69
	20			11.48	8.75	13.72	9.91	14.84	10.17	15.68	10.29	17.37	10.97	17.97	10.66
	22			11.46	8.72	13.71	9.91	14.84	10.17	15.61	10.25	17.15	10.89	17.72	10.58
32	24			11.44	8.71	13.71	9.91	14.84	10.17	15.54	10.22	16.93	10.81	17.48	10.50
(m^3/min)	26			11.43	8.70	13.64	9.88	14.70	10.11	15.35	10.15	16.66	10.71	17.21	10.39
	28	10.36	8.59	11.42	8.70	13.58	9.85	14.56	10.04	15.17	10.06	16.39	10.60	16.94	10.31
	30	10.36	8.59	11.40	8.69	13.48	9.80	14.42	9.99	14.99	9.99	16.14	10.51	16.69	10.21
	32	10.36	8.59	11.37	8.68	13.37	9.75	14.28	9.93	14.82	9.91	15.89	10.41	16.43	10.11
	34	10.36	8.59	11.33	8.66	13.32	9.73	14.09	9.84	14.58	9.82	15.56	10.28	16.09	9.98
	35	10.36	8.59	11.31	8.65	13.30	9.72	14.00	9.80	14.46	9.76	15.39	10.22	15.92	9.93
	36	10.36	8.59	11.30	8.64	13.20	9.68	13.93	9.77	14.32	9.70	15.11	10.10	15.61	9.81
	38	10.36	8.59	11.27	8.63	13.00	9.59	13.79	9.70	14.05	9.58	14.56	9.89	15.00	9.60
	39	10.36	8.59	11.26	8.63	12.90	9.54	13.72	9.68	13.91	9.53	14.28	9.78	14.69	9.49
	41	10.36	8.59	11.22	8.61	12.51	9.37	13.16	9.44	13.32	9.29	13.65	9.55	14.00	9.22
	43	10.36	8.59	11.18	8.59	12.13	9.20	12.60	9.21	12.74	9.05	13.02	9.28	13.31	9.01

Air flow	Ambient air temp. DB	Ambient air temp. WB	Indoor air temp. 16 °CDB	18 °CDB	20 °CDB	22 °CDB	24 °CDB
Hi	-19.8	-20	9.28	9.28	9.28	9.28	9.28
	-17.8	-18	9.88	9.88	9.88	9.88	9.88
	-15.7	-16	10.47	10.47	10.47	10.47	10.47
	-13.7	-14	11.07	11.07	11.07	11.07	11.07
	-11.7	-12	11.67	11.67	11.67	11.67	11.67
	-9.6	-10	12.27	12.27	12.27	12.27	12.27
	-7.5	-8	13.01	13.01	13.01	13.01	13.01
32	-5.5	-6	13.76	13.76	13.76	13.76	13.76
(m^3/min)	-3.4	-4	14.24	14.22	14.20	14.06	13.92
	-1.3	-2	14.72	14.68	14.64	14.36	14.08
	0.8	0	15.52	15.30	15.08	14.54	14.00
	3.9	3	16.84	16.24	15.64	14.76	13.88
	7.0	6	18.40	17.20	16.00	14.88	13.76
	10.1	9	18.28	17.11	15.94	14.79	13.64
	13.2	12	18.16	17.00	15.84	14.68	13.52
	16.9	15.5	18.02	16.86	15.70	14.54	13.38

Air flow	Ambient air temp. (°CDB)	Indoor air temperature 21 °CDB 14 °CWB TC	21 °CDB 14 °CWB SHC	23 °CDB 16 °CWB TC	23 °CDB 16 °CWB SHC	26 °CDB 18 °CWB TC	26 °CDB 18 °CWB SHC	27 °CDB 19 °CWB TC	27 °CDB 19 °CWB SHC	28 °CDB 20 °CWB TC	28 °CDB 20 °CWB SHC	31 °CDB 22 °CWB TC	31 °CDB 22 °CWB SHC	33 °CDB 24 °CWB TC	33 °CDB 24 °CWB SHC
Me	10			10.45	7.88	12.49	8.93	13.52	9.18	14.38	9.31	16.11	10.02	16.72	9.75
	12			10.45	7.88	12.49	8.93	13.52	9.18	14.36	9.31	16.05	10.00	16.65	9.72
	14			10.45	7.88	12.49	8.93	13.52	9.18	14.34	9.30	15.99	9.98	16.58	9.70
	16			10.45	7.88	12.49	8.93	13.52	9.18	14.32	9.29	15.93	9.96	16.51	9.68
	18			10.45	7.88	12.49	8.93	13.52	9.18	14.30	9.28	15.87	9.93	16.44	9.65
	20			10.45	7.88	12.49	8.93	13.52	9.18	14.28	9.27	15.82	9.91	16.36	9.63
	22			10.44	7.88	12.49	8.93	13.52	9.18	14.22	9.25	15.62	9.84	16.14	9.54
28	24			10.42	7.86	12.48	8.93	13.52	9.18	14.15	9.22	15.42	9.75	15.92	9.45
(m^3/min)	26			10.41	7.85	12.43	8.90	13.39	9.11	13.98	9.14	15.17	9.66	15.67	9.37
	28	9.44	7.74	10.40	7.85	12.37	8.87	13.26	9.06	13.82	9.08	14.93	9.56	15.43	9.27
	30	9.44	7.74	10.38	7.84	12.27	8.83	13.13	9.00	13.66	9.00	14.70	9.46	15.20	9.20
	32	9.44	7.74	10.35	7.83	12.18	8.79	13.01	8.94	13.49	8.93	14.47	9.38	14.97	9.11
	34	9.44	7.74	10.32	7.81	12.13	8.77	12.84	8.87	13.28	8.84	14.17	9.25	14.66	8.99
	35	9.44	7.74	10.30	7.81	12.11	8.76	12.75	8.80	13.17	8.80	14.02	9.19	14.50	8.94
	36	9.44	7.74	10.29	7.80	12.02	8.71	12.69	8.80	13.05	8.75	13.76	9.09	14.22	8.83
	38	9.44	7.74	10.26	7.79	11.84	8.61	12.56	8.75	12.79	8.63	13.26	8.90	13.66	8.64
	39	9.44	7.74	10.25	7.78	11.75	8.57	12.50	8.72	12.67	8.59	13.01	8.80	13.38	8.50
	41	9.44	7.74	10.21	7.77	11.40	8.43	11.99	8.48	12.13	8.34	12.43	8.55	12.75	8.30
	43	9.44	7.74	10.18	7.75	11.04	8.28	11.48	8.28	11.60	8.14	11.85	8.36	12.12	8.10

Air flow	Ambient air temp. DB	Ambient air temp. WB	Indoor air temp. 16 °CDB	18 °CDB	20 °CDB	22 °CDB	24 °CDB
Me	-19.8	-20	8.48	8.48	8.48	8.48	8.48
	-17.8	-18	9.03	9.03	9.03	9.03	9.03
	-15.7	-16	9.57	9.57	9.57	9.57	9.57
	-13.7	-14	10.12	10.12	10.12	10.12	10.12
	-11.7	-12	10.66	10.66	10.66	10.66	10.66
	-9.6	-10	11.21	11.21	11.21	11.21	11.21
	-7.5	-8	11.89	11.89	11.89	11.89	11.89
28	-5.5	-6	12.57	12.57	12.57	12.57	12.57
(m^3/min)	-3.4	-4	13.01	12.99	12.98	12.85	12.72
	-1.3	-2	13.45	13.41	13.38	13.12	12.87
	0.8	0	14.18	13.98	13.78	13.29	12.79
	3.9	3	15.39	14.84	14.29	13.49	12.68
	7.0	6	16.81	15.72	14.62	13.60	12.57
	10.1	9	16.70	15.63	14.57	13.51	12.46
	13.2	12	16.59	15.53	14.47	13.41	12.35
	16.9	15.5	16.47	15.41	14.35	13.29	12.23

Air flow	Ambient air temp. (°CDB)	Indoor air temperature 21 °CDB 14 °CWB TC	21 °CDB 14 °CWB SHC	23 °CDB 16 °CWB TC	23 °CDB 16 °CWB SHC	26 °CDB 18 °CWB TC	26 °CDB 18 °CWB SHC	27 °CDB 19 °CWB TC	27 °CDB 19 °CWB SHC	28 °CDB 20 °CWB TC	28 °CDB 20 °CWB SHC	31 °CDB 22 °CWB TC	31 °CDB 22 °CWB SHC	33 °CDB 24 °CWB TC	33 °CDB 24 °CWB SHC
Lo	10			9.32	6.95	11.14	7.87	12.05	8.10	12.82	8.24	14.36	8.87	14.91	8.62
	12			9.32	6.95	11.14	7.87	12.05	8.10	12.81	8.23	14.31	8.86	14.85	8.60
	14			9.32	6.95	11.14	7.87	12.05	8.10	12.79	8.23	14.26	8.84	14.78	8.57
	16			9.32	6.95	11.14	7.87	12.05	8.10	12.77	8.22	14.21	8.80	14.72	8.55
	18			9.32	6.95	11.14	7.87	12.05	8.10	12.75	8.21	14.16	8.79	14.66	8.52
	20			9.32	6.95	11.14	7.87	12.05	8.10	12.74	8.19	14.10	8.76	14.59	8.50
	22			9.31	6.95	11.14	7.87	12.05	8.10	12.68	8.17	13.93	8.69	14.39	8.41
24	24			9.29	6.94	11.13	7.87	12.05	8.10	12.62	8.14	13.75	8.62	14.19	8.34
(m^3/min)	26			9.29	6.94	11.08	7.85	11.94	8.05	12.47	8.08	13.53	8.52	13.98	8.26
	28	8.41	6.83	9.28	6.93	11.03	7.82	11.82	7.99	12.32	8.01	13.31	8.43	13.76	8.19
	30	8.41	6.83	9.26	6.92	10.94	7.79	11.71	7.95	12.18	7.96	13.11	8.36	13.55	8.10
	32	8.41	6.83	9.23	6.91	10.86	7.75	11.60	7.88	12.03	7.88	12.91	8.27	13.35	8.02
	34	8.41	6.83	9.20	6.90	10.82	7.73	11.45	7.82	11.84	7.78	12.63	8.15	13.07	7.93
	35	8.41	6.83	9.19	6.89	10.80	7.73	11.37	7.73	11.75	7.75	12.50	8.11	12.93	7.87
	36	8.41	6.83	9.18	6.89	10.72	7.69	11.31	7.76	11.63	7.70	12.27	8.01	12.68	7.79
	38	8.41	6.83	9.15	6.87	10.56	7.61	11.20	7.71	11.41	7.61	11.82	7.81	12.18	7.58
	39	8.41	6.83	9.14	6.87	10.48	7.58	11.14	7.69	11.30	7.57	11.60	7.73	11.93	7.50
	41	8.41	6.83	9.11	6.86	10.16	7.43	10.69	7.49	10.82	7.37	11.09	7.55	11.37	7.31
	43	8.41	6.83	9.08	6.84	9.85	7.31	10.23	7.30	10.35	7.18	10.57	7.36	10.81	7.12

Air flow	Ambient air temp. DB	Ambient air temp. WB	Indoor air temp. 16 °CDB	18 °CDB	20 °CDB	22 °CDB	24 °CDB
Lo	-19.8	-20	7.60	7.60	7.60	7.60	7.60
	-17.8	-18	8.09	8.09	8.09	8.09	8.09
	-15.7	-16	8.58	8.58	8.58	8.58	8.58
	-13.7	-14	9.07	9.07	9.07	9.07	9.07
	-11.7	-12	9.56	9.56	9.56	9.56	9.56
	-9.6	-10	10.05	10.05	10.05	10.05	10.05
	-7.5	-8	10.66	10.66	10.66	10.66	10.66
24	-5.5	-6	11.27	11.27	11.27	11.27	11.27
(m^3/min)	-3.4	-4	11.67	11.65	11.64	11.52	11.41
	-1.3	-2	12.06	12.03	12.00	11.77	11.54
	0.8	0	12.72	12.54	12.36	11.91	11.47
	3.9	3	13.80	13.31	12.82	12.09	11.37
	7.0	6	15.08	14.09	13.11	12.19	11.27
	10.1	9	14.98	14.02	13.06	12.12	11.18
	13.2	12	14.88	13.93	12.98	12.03	11.08
	16.9	15.5	14.77	13.81	12.86	11.91	10.96

Note(1) This data shows average statuses out of those possible to occur in the system control.
(Depending on controls, there may be ranges where the operation is not conducted continuously.)

(2) Symbols are as follows
TC :Total cooling capacity(kW)
SHC :Sensible heat capacity(kW)

Cool mode	Uhi	Hi	Me	Lo
Air flow	32.00	32	28	24
TC	14.00	14.00	12.75	11.37
SHF	0.70	0.70	0.69	0.68

Heat mode	Uhi	Hi	Me	Lo
Air flow	32	32	28	24
Heating capacity	16.00	16.00	14.62	13.11

Model **FDTQ22KXE6** Cool Mode

Air flow	Ambient air temp. (°CDB)	Indoor air temperature 21 °CDB 14 °CWB TC	21 °CDB 14 °CWB SHC	23 °CDB 16 °CWB TC	23 °CDB 16 °CWB SHC	26 °CDB 18 °CWB TC	26 °CDB 18 °CWB SHC	27 °CDB 19 °CWB TC	27 °CDB 19 °CWB SHC	28 °CDB 20 °CWB TC	28 °CDB 20 °CWB SHC	31 °CDB 22 °CWB TC	31 °CDB 22 °CWB SHC	33 °CDB 24 °CWB TC	33 °CDB 24 °CWB SHC
Uhi 7.8 (m³/min)	10			1.91	1.61	2.28	1.81	2.47	1.86	2.63	1.88	2.94	2.03	3.06	1.98
	12			1.91	1.61	2.28	1.81	2.47	1.86	2.62	1.87	2.93	2.03	3.04	1.97
	14			1.91	1.61	2.28	1.81	2.47	1.86	2.62	1.87	2.92	2.02	3.03	1.97
	16			1.91	1.61	2.28	1.81	2.47	1.86	2.62	1.87	2.91	2.02	3.02	1.97
	18			1.91	1.61	2.28	1.81	2.47	1.86	2.61	1.87	2.90	2.01	3.00	1.96
	20			1.91	1.61	2.28	1.81	2.47	1.86	2.61	1.87	2.89	2.01	2.99	1.96
	22			1.91	1.61	2.28	1.81	2.47	1.86	2.60	1.87	2.85	1.99	2.95	1.94
	24			1.90	1.60	2.28	1.81	2.47	1.86	2.59	1.86	2.82	1.98	2.91	1.93
	26			1.90	1.60	2.27	1.81	2.45	1.85	2.56	1.85	2.77	1.97	2.86	1.91
	28	1.72	1.58	1.90	1.60	2.26	1.81	2.42	1.84	2.52	1.83	2.73	1.95	2.82	1.90
	30	1.72	1.58	1.90	1.60	2.24	1.80	2.40	1.82	2.50	1.83	2.69	1.93	2.78	1.88
	32	1.72	1.58	1.89	1.60	2.23	1.79	2.38	1.82	2.47	1.82	2.65	1.92	2.73	1.86
	34	1.72	1.58	1.89	1.60	2.22	1.79	2.35	1.81	2.43	1.80	2.59	1.89	2.68	1.84
	35	1.72	1.58	1.88	1.59	2.21	1.78	2.33	1.79	2.41	1.79	2.56	1.88	2.65	1.84
	36	1.72	1.58	1.88	1.59	2.20	1.78	2.32	1.79	2.38	1.78	2.52	1.87	2.60	1.82
	38	1.72	1.58	1.88	1.59	2.16	1.76	2.30	1.79	2.34	1.76	2.42	1.84	2.50	1.79
	39	1.72	1.58	1.87	1.59	2.15	1.75	2.28	1.78	2.31	1.75	2.38	1.82	2.44	1.77
	41	1.72	1.58	1.87	1.59	2.08	1.73	2.19	1.73	2.22	1.71	2.27	1.79	2.33	1.74
	43	1.72	1.58	1.86	1.58	2.02	1.71	2.10	1.70	2.12	1.68	2.17	1.75	2.22	1.71

Heat Mode

Air flow	Ambient air temp. DB	Ambient air temp. WB	Indoor air temp. 16 °CDB	18 °CDB	20 °CDB	22 °CDB	24 °CDB
Uhi 7.8 (m³/min)	-19.8	-20	1.54	1.54	1.54	1.54	1.54
	-17.8	-18	1.64	1.64	1.64	1.64	1.64
	-15.7	-16	1.73	1.73	1.73	1.73	1.73
	-13.7	-14	1.83	1.83	1.83	1.83	1.83
	-11.7	-12	1.93	1.93	1.93	1.93	1.93
	-9.6	-10	2.03	2.03	2.03	2.03	2.03
	-7.5	-8	2.16	2.16	2.16	2.16	2.16
	-5.5	-6	2.28	2.28	2.28	2.28	2.28
	-3.4	-4	2.36	2.36	2.35	2.33	2.31
	-1.3	-2	2.44	2.43	2.42	2.38	2.33
	0.8	0	2.57	2.53	2.50	2.41	2.32
	3.9	3	2.79	2.69	2.59	2.44	2.30
	7.0	6	3.05	2.85	2.65	2.46	2.28
	10.1	9	3.03	2.83	2.64	2.45	2.26
	13.2	12	3.01	2.82	2.62	2.43	2.24
	16.9	15.5	2.98	2.79	2.60	2.41	2.22

Air flow	Ambient air temp. (°CDB)	Indoor air temperature 21 °CDB 14 °CWB TC	21 °CDB 14 °CWB SHC	23 °CDB 16 °CWB TC	23 °CDB 16 °CWB SHC	26 °CDB 18 °CWB TC	26 °CDB 18 °CWB SHC	27 °CDB 19 °CWB TC	27 °CDB 19 °CWB SHC	28 °CDB 20 °CWB TC	28 °CDB 20 °CWB SHC	31 °CDB 22 °CWB TC	31 °CDB 22 °CWB SHC	33 °CDB 24 °CWB TC	33 °CDB 24 °CWB SHC
Hi 7 (m³/min)	10			1.80	1.50	2.16	1.70	2.33	1.73	2.48	1.75	2.78	1.90	2.89	1.85
	12			1.80	1.50	2.16	1.70	2.33	1.73	2.48	1.75	2.77	1.89	2.87	1.84
	14			1.80	1.50	2.16	1.70	2.33	1.73	2.47	1.75	2.76	1.89	2.86	1.84
	16			1.80	1.50	2.16	1.70	2.33	1.73	2.47	1.75	2.75	1.88	2.85	1.84
	18			1.80	1.50	2.16	1.70	2.33	1.73	2.47	1.75	2.74	1.88	2.84	1.83
	20			1.80	1.50	2.16	1.70	2.33	1.73	2.46	1.75	2.73	1.88	2.82	1.82
	22			1.80	1.50	2.15	1.69	2.33	1.73	2.45	1.74	2.69	1.86	2.78	1.81
	24			1.80	1.50	2.15	1.69	2.33	1.73	2.44	1.74	2.66	1.85	2.75	1.80
	26			1.80	1.50	2.14	1.69	2.31	1.71	2.41	1.73	2.62	1.84	2.70	1.77
	28	1.63	1.48	1.80	1.50	2.13	1.68	2.29	1.71	2.38	1.70	2.58	1.82	2.66	1.76
	30	1.63	1.48	1.79	1.49	2.12	1.68	2.27	1.70	2.36	1.70	2.54	1.80	2.62	1.75
	32	1.63	1.48	1.79	1.49	2.10	1.67	2.24	1.69	2.33	1.69	2.50	1.78	2.58	1.74
	34	1.63	1.48	1.78	1.49	2.09	1.67	2.21	1.68	2.29	1.67	2.44	1.77	2.53	1.72
	35	1.63	1.48	1.78	1.49	2.09	1.67	2.20	1.67	2.27	1.67	2.42	1.76	2.50	1.72
	36	1.63	1.48	1.78	1.49	2.07	1.66	2.19	1.67	2.25	1.66	2.37	1.74	2.45	1.70
	38	1.63	1.48	1.77	1.48	2.04	1.64	2.17	1.67	2.21	1.64	2.29	1.71	2.36	1.67
	39	1.63	1.48	1.77	1.48	2.03	1.64	2.16	1.66	2.19	1.64	2.24	1.70	2.31	1.65
	41	1.63	1.48	1.76	1.48	1.97	1.62	2.07	1.62	2.09	1.60	2.14	1.66	2.20	1.62
	43	1.63	1.48	1.76	1.48	1.91	1.59	1.98	1.59	2.00	1.56	2.05	1.63	2.09	1.58

Air flow	Ambient air temp. DB	Ambient air temp. WB	Indoor air temp. 16 °CDB	18 °CDB	20 °CDB	22 °CDB	24 °CDB
Hi 7 (m³/min)	-19.8	-20	1.45	1.45	1.45	1.45	1.45
	-17.8	-18	1.54	1.54	1.54	1.54	1.54
	-15.7	-16	1.64	1.64	1.64	1.64	1.64
	-13.7	-14	1.73	1.73	1.73	1.73	1.73
	-11.7	-12	1.82	1.82	1.82	1.82	1.82
	-9.6	-10	1.92	1.92	1.92	1.92	1.92
	-7.5	-8	2.03	2.03	2.03	2.03	2.03
	-5.5	-6	2.15	2.15	2.15	2.15	2.15
	-3.4	-4	2.23	2.22	2.22	2.20	2.18
	-1.3	-2	2.30	2.29	2.29	2.24	2.20
	0.8	0	2.43	2.39	2.36	2.27	2.19
	3.9	3	2.63	2.54	2.44	2.31	2.17
	7.0	6	2.88	2.69	2.50	2.33	2.15
	10.1	9	2.86	2.67	2.49	2.31	2.13
	13.2	12	2.84	2.66	2.48	2.29	2.11
	16.9	15.5	2.82	2.63	2.45	2.27	2.09

Air flow	Ambient air temp. (°CDB)	Indoor air temperature 21 °CDB 14 °CWB TC	21 °CDB 14 °CWB SHC	23 °CDB 16 °CWB TC	23 °CDB 16 °CWB SHC	26 °CDB 18 °CWB TC	26 °CDB 18 °CWB SHC	27 °CDB 19 °CWB TC	27 °CDB 19 °CWB SHC	28 °CDB 20 °CWB TC	28 °CDB 20 °CWB SHC	31 °CDB 22 °CWB TC	31 °CDB 22 °CWB SHC	33 °CDB 24 °CWB TC	33 °CDB 24 °CWB SHC
Me 7.00 (m³/min)	10			1.80	1.50	2.16	1.70	2.33	1.73	2.48	1.75	2.78	1.90	2.89	1.85
	12			1.80	1.50	2.16	1.70	2.33	1.73	2.48	1.75	2.77	1.89	2.87	1.84
	14			1.80	1.50	2.16	1.70	2.33	1.73	2.47	1.75	2.76	1.89	2.86	1.84
	16			1.80	1.50	2.16	1.70	2.33	1.73	2.47	1.75	2.75	1.88	2.85	1.84
	18			1.80	1.50	2.16	1.70	2.33	1.73	2.47	1.75	2.74	1.88	2.84	1.83
	20			1.80	1.50	2.16	1.70	2.33	1.73	2.46	1.75	2.73	1.88	2.82	1.82
	22			1.80	1.50	2.15	1.69	2.33	1.73	2.45	1.74	2.69	1.86	2.78	1.81
	24			1.80	1.50	2.15	1.69	2.33	1.73	2.44	1.74	2.66	1.85	2.75	1.80
	26			1.80	1.50	2.14	1.69	2.31	1.71	2.41	1.73	2.62	1.84	2.70	1.77
	28	1.63	1.48	1.80	1.50	2.13	1.68	2.29	1.71	2.38	1.70	2.58	1.82	2.66	1.76
	30	1.63	1.48	1.79	1.49	2.12	1.68	2.27	1.70	2.36	1.70	2.54	1.80	2.62	1.75
	32	1.63	1.48	1.79	1.49	2.10	1.67	2.24	1.69	2.33	1.69	2.50	1.78	2.58	1.74
	34	1.63	1.48	1.78	1.49	2.09	1.67	2.21	1.68	2.29	1.67	2.44	1.77	2.53	1.72
	35	1.63	1.48	1.78	1.49	2.09	1.67	2.20	1.67	2.27	1.67	2.42	1.76	2.50	1.72
	36	1.63	1.48	1.78	1.49	2.07	1.66	2.19	1.67	2.25	1.66	2.37	1.74	2.45	1.70
	38	1.63	1.48	1.77	1.48	2.04	1.64	2.17	1.67	2.21	1.64	2.29	1.71	2.36	1.67
	39	1.63	1.48	1.77	1.48	2.03	1.64	2.16	1.66	2.19	1.64	2.24	1.70	2.31	1.65
	41	1.63	1.48	1.76	1.48	1.97	1.62	2.07	1.62	2.09	1.60	2.14	1.66	2.20	1.62
	43	1.63	1.48	1.76	1.48	1.91	1.59	1.98	1.59	2.00	1.56	2.05	1.63	2.09	1.58

Air flow	Ambient air temp. DB	Ambient air temp. WB	Indoor air temp. 16 °CDB	18 °CDB	20 °CDB	22 °CDB	24 °CDB
Me 7.00 (m³/min)	-19.8	-20	1.45	1.45	1.45	1.45	1.45
	-17.8	-18	1.54	1.54	1.54	1.54	1.54
	-15.7	-16	1.64	1.64	1.64	1.64	1.64
	-13.7	-14	1.73	1.73	1.73	1.73	1.73
	-11.7	-12	1.82	1.82	1.82	1.82	1.82
	-9.6	-10	1.92	1.92	1.92	1.92	1.92
	-7.5	-8	2.03	2.03	2.03	2.03	2.03
	-5.5	-6	2.15	2.15	2.15	2.15	2.15
	-3.4	-4	2.23	2.22	2.22	2.20	2.18
	-1.3	-2	2.30	2.29	2.29	2.24	2.20
	0.8	0	2.43	2.39	2.36	2.27	2.19
	3.9	3	2.63	2.54	2.44	2.31	2.17
	7.0	6	2.88	2.69	2.50	2.33	2.15
	10.1	9	2.86	2.67	2.49	2.31	2.13
	13.2	12	2.84	2.66	2.48	2.29	2.11
	16.9	15.5	2.82	2.63	2.45	2.27	2.09

Air flow	Ambient air temp. (°CDB)	Indoor air temperature 21 °CDB 14 °CWB TC	21 °CDB 14 °CWB SHC	23 °CDB 16 °CWB TC	23 °CDB 16 °CWB SHC	26 °CDB 18 °CWB TC	26 °CDB 18 °CWB SHC	27 °CDB 19 °CWB TC	27 °CDB 19 °CWB SHC	28 °CDB 20 °CWB TC	28 °CDB 20 °CWB SHC	31 °CDB 22 °CWB TC	31 °CDB 22 °CWB SHC	33 °CDB 24 °CWB TC	33 °CDB 24 °CWB SHC
Lo 5.4 (m³/min)	10			1.58	1.26	1.89	1.43	2.05	1.46	2.18	1.48	2.44	1.60	2.53	1.56
	12			1.58	1.26	1.89	1.43	2.05	1.46	2.17	1.48	2.43	1.60	2.52	1.55
	14			1.58	1.26	1.89	1.43	2.05	1.46	2.17	1.48	2.42	1.59	2.51	1.55
	16			1.58	1.26	1.89	1.43	2.05	1.46	2.17	1.48	2.41	1.59	2.50	1.55
	18			1.58	1.26	1.89	1.43	2.05	1.46	2.16	1.47	2.40	1.58	2.49	1.54
	20			1.58	1.26	1.89	1.43	2.05	1.46	2.16	1.47	2.39	1.58	2.48	1.54
	22			1.58	1.26	1.89	1.43	2.05	1.46	2.15	1.47	2.36	1.57	2.44	1.52
	24			1.58	1.26	1.89	1.43	2.05	1.46	2.14	1.47	2.33	1.56	2.41	1.51
	26			1.58	1.26	1.88	1.42	2.03	1.45	2.12	1.46	2.30	1.55	2.37	1.50
	28	1.43	1.24	1.57	1.26	1.87	1.42	2.01	1.45	2.09	1.45	2.26	1.52	2.34	1.49
	30	1.43	1.24	1.57	1.26	1.86	1.41	1.99	1.44	2.07	1.44	2.23	1.52	2.30	1.48
	32	1.43	1.24	1.57	1.26	1.84	1.41	1.97	1.43	2.04	1.42	2.19	1.50	2.27	1.46
	34	1.43	1.24	1.56	1.25	1.84	1.41	1.94	1.42	2.01	1.41	2.14	1.48	2.22	1.45
	35	1.43	1.24	1.56	1.25	1.83	1.40	1.93	1.41	1.99	1.40	2.12	1.48	2.20	1.44
	36	1.43	1.24	1.56	1.25	1.82	1.40	1.92	1.41	1.97	1.40	2.08	1.46	2.15	1.42
	38	1.43	1.24	1.55	1.25	1.79	1.38	1.90	1.40	1.94	1.39	2.01	1.43	2.07	1.40
	39	1.43	1.24	1.55	1.25	1.78	1.38	1.89	1.40	1.92	1.38	1.97	1.42	2.02	1.38
	41	1.43	1.24	1.55	1.25	1.72	1.35	1.81	1.36	1.84	1.35	1.88	1.39	1.93	1.35
	43	1.43	1.24	1.54	1.24	1.67	1.33	1.74	1.33	1.76	1.31	1.79	1.35	1.83	1.31

Air flow	Ambient air temp. DB	Ambient air temp. WB	Indoor air temp. 16 °CDB	18 °CDB	20 °CDB	22 °CDB	24 °CDB
Lo 5.4 (m³/min)	-19.8	-20	1.25	1.25	1.25	1.25	1.25
	-17.8	-18	1.33	1.33	1.33	1.33	1.33
	-15.7	-16	1.41	1.41	1.41	1.41	1.41
	-13.7	-14	1.49	1.49	1.49	1.49	1.49
	-11.7	-12	1.58	1.58	1.58	1.58	1.58
	-9.6	-10	1.66	1.66	1.66	1.66	1.66
	-7.5	-8	1.76	1.76	1.76	1.76	1.76
	-5.5	-6	1.86	1.86	1.86	1.86	1.86
	-3.4	-4	1.92	1.92	1.92	1.90	1.88
	-1.3	-2	1.99	1.98	1.98	1.94	1.90
	0.8	0	2.10	2.07	2.04	1.96	1.89
	3.9	3	2.27	2.19	2.11	1.99	1.87
	7.0	6	2.48	2.32	2.16	2.01	1.86
	10.1	9	2.47	2.31	2.15	2.00	1.84
	13.2	12	2.45	2.30	2.14	1.98	1.83
	16.9	15.5	2.43	2.28	2.12	1.96	1.81

Note(1) This data shows average statuses out of those possible to occur in the system control.
(Depending on controls, there may be ranges where the operation is not conducted continuously.)
(2) Symbols are as follows
TC :Total cooling capacity(kW)
SHC :Sensible heat capacity(kW)

Cool mode	Uhi	Hi	Me	Lo
Air flow	7.80	7	7.00	5.4
TC	2.33	2.20	2.20	1.93
SHF	0.77	0.76	0.76	0.73

Heat mode	Uhi	Hi	Me	Lo
Air flow	7.8	7	7.00	5.4
Heating capacity	2.65	2.50	2.50	2.16

Model **FDTQ28KXE6** Cool Mode

Air flow	Ambient air temp. (°CDB)	Indoor air temperature 21 °CDB 14 °CWB TC	21 °CDB 14 °CWB SHC	23 °CDB 16 °CWB TC	23 °CDB 16 °CWB SHC	26 °CDB 18 °CWB TC	26 °CDB 18 °CWB SHC	27 °CDB 19 °CWB TC	27 °CDB 19 °CWB SHC	28 °CDB 20 °CWB TC	28 °CDB 20 °CWB SHC	31 °CDB 22 °CWB TC	31 °CDB 22 °CWB SHC	33 °CDB 24 °CWB TC	33 °CDB 24 °CWB SHC
Uhi 7.8 (m³/min)	10			2.45	1.95	2.93	2.21	3.17	2.26	3.37	2.29	3.78	2.48	3.92	2.40
	12			2.45	1.95	2.93	2.21	3.17	2.26	3.37	2.29	3.76	2.47	3.90	2.40
	14			2.45	1.95	2.93	2.21	3.17	2.26	3.36	2.28	3.75	2.47	3.89	2.39
	16			2.45	1.95	2.93	2.21	3.17	2.26	3.36	2.28	3.74	2.46	3.87	2.39
	18			2.45	1.95	2.93	2.21	3.17	2.26	3.35	2.28	3.72	2.45	3.85	2.38
	20			2.45	1.95	2.93	2.21	3.17	2.26	3.35	2.28	3.71	2.44	3.84	2.38
	22			2.45	1.95	2.93	2.21	3.17	2.26	3.33	2.27	3.66	2.43	3.78	2.36
	24			2.44	1.95	2.93	2.21	3.17	2.26	3.32	2.27	3.62	2.41	3.73	2.34
	26			2.44	1.95	2.91	2.20	3.14	2.25	3.28	2.25	3.56	2.39	3.68	2.32
	28	2.21	1.93	2.44	1.95	2.90	2.20	3.11	2.24	3.24	2.24	3.50	2.37	3.62	2.31
	30	2.21	1.93	2.43	1.95	2.88	2.19	3.08	2.23	3.20	2.22	3.45	2.35	3.56	2.28
	32	2.21	1.93	2.43	1.95	2.86	2.18	3.05	2.21	3.16	2.21	3.39	2.33	3.51	2.27
	34	2.21	1.93	2.42	1.94	2.85	2.18	3.01	2.20	3.11	2.19	3.32	2.30	3.44	2.24
	35	2.21	1.93	2.42	1.94	2.84	2.17	2.99	2.18	3.09	2.18	3.29	2.29	3.40	2.23
	36	2.21	1.93	2.41	1.94	2.82	2.16	2.98	2.18	3.06	2.17	3.23	2.27	3.33	2.20
	38	2.21	1.93	2.41	1.94	2.78	2.15	2.95	2.17	3.00	2.14	3.11	2.22	3.20	2.16
	39	2.21	1.93	2.40	1.93	2.75	2.13	2.93	2.16	2.97	2.13	3.05	2.20	3.14	2.14
	41	2.21	1.93	2.40	1.93	2.67	2.10	2.81	2.11	2.85	2.08	2.92	2.15	2.99	2.09
	43	2.21	1.93	2.39	1.93	2.59	2.06	2.69	2.07	2.72	2.03	2.78	2.10	2.84	2.03

Heat Mode

Air flow	Ambient air temp. DB	Ambient air temp. WB	Indoor air temp. 16 °CDB	18 °CDB	20 °CDB	22 °CDB	24 °CDB
Uhi 7.8 (m³/min)	-19.8	-20	2.01	2.01	2.01	2.01	2.01
	-17.8	-18	2.14	2.14	2.14	2.14	2.14
	-15.7	-16	2.27	2.27	2.27	2.27	2.27
	-13.7	-14	2.39	2.39	2.39	2.39	2.39
	-11.7	-12	2.52	2.52	2.52	2.52	2.52
	-9.6	-10	2.65	2.65	2.65	2.65	2.65
	-7.5	-8	2.81	2.81	2.81	2.81	2.81
	-5.5	-6	2.98	2.98	2.98	2.98	2.98
	-3.4	-4	3.08	3.08	3.07	3.04	3.01
	-1.3	-2	3.18	3.17	3.17	3.11	3.04
	0.8	0	3.36	3.31	3.26	3.14	3.03
	3.9	3	3.64	3.51	3.38	3.19	3.00
	7.0	6	3.98	3.72	3.46	3.22	2.98
	10.1	9	3.95	3.70	3.45	3.20	2.95
	13.2	12	3.93	3.68	3.43	3.17	2.92
	16.9	15.5	3.90	3.65	3.40	3.14	2.89

Air flow	Ambient air temp. (°CDB)	Indoor air temperature 21 °CDB 14 °CWB TC	21 °CDB 14 °CWB SHC	23 °CDB 16 °CWB TC	23 °CDB 16 °CWB SHC	26 °CDB 18 °CWB TC	26 °CDB 18 °CWB SHC	27 °CDB 19 °CWB TC	27 °CDB 19 °CWB SHC	28 °CDB 20 °CWB TC	28 °CDB 20 °CWB SHC	31 °CDB 22 °CWB TC	31 °CDB 22 °CWB SHC	33 °CDB 24 °CWB TC	33 °CDB 24 °CWB SHC
Hi 7 (m³/min)	10			2.30	1.81	2.74	2.04	2.97	2.10	3.16	2.13	3.54	2.29	3.67	2.23
	12			2.30	1.81	2.74	2.04	2.97	2.10	3.15	2.12	3.52	2.28	3.66	2.22
	14			2.30	1.81	2.74	2.04	2.97	2.10	3.15	2.12	3.51	2.28	3.64	2.22
	16			2.30	1.81	2.74	2.04	2.97	2.10	3.14	2.12	3.50	2.27	3.63	2.21
	18			2.30	1.81	2.74	2.04	2.97	2.10	3.14	2.12	3.49	2.27	3.61	2.21
	20			2.30	1.81	2.74	2.04	2.97	2.10	3.14	2.12	3.47	2.26	3.59	2.20
	22			2.29	1.80	2.74	2.04	2.97	2.10	3.12	2.11	3.43	2.25	3.54	2.18
	24			2.29	1.80	2.74	2.04	2.97	2.10	3.11	2.10	3.39	2.23	3.50	2.17
	26			2.29	1.80	2.73	2.04	2.94	2.08	3.07	2.09	3.33	2.21	3.44	2.15
	28	2.07	1.78	2.28	1.80	2.72	2.03	2.91	2.07	3.03	2.07	3.28	2.19	3.39	2.13
	30	2.07	1.78	2.28	1.80	2.70	2.02	2.88	2.05	3.00	2.06	3.23	2.17	3.34	2.11
	32	2.07	1.78	2.27	1.80	2.67	2.01	2.86	2.05	2.96	2.04	3.18	2.15	3.29	2.09
	34	2.07	1.78	2.27	1.80	2.66	2.01	2.82	2.03	2.92	2.02	3.11	2.13	3.22	2.07
	35	2.07	1.78	2.26	1.79	2.66	2.01	2.80	2.02	2.89	2.01	3.08	2.11	3.18	2.06
	36	2.07	1.78	2.26	1.79	2.64	2.00	2.79	2.02	2.86	2.00	3.02	2.09	3.12	2.03
	38	2.07	1.78	2.25	1.78	2.60	1.98	2.76	2.01	2.81	1.98	2.91	2.05	3.00	1.99
	39	2.07	1.78	2.25	1.78	2.58	1.97	2.74	2.00	2.78	1.97	2.86	2.03	2.94	1.97
	41	2.07	1.78	2.24	1.78	2.50	1.94	2.63	1.95	2.66	1.92	2.73	1.98	2.80	1.92
	43	2.07	1.78	2.24	1.78	2.43	1.91	2.52	1.91	2.55	1.88	2.60	1.93	2.66	1.87

Air flow	Ambient air temp. DB	Ambient air temp. WB	Indoor air temp. 16 °CDB	18 °CDB	20 °CDB	22 °CDB	24 °CDB
Hi 7 (m³/min)	-19.8	-20	1.86	1.86	1.86	1.86	1.86
	-17.8	-18	1.98	1.98	1.98	1.98	1.98
	-15.7	-16	2.09	2.09	2.09	2.09	2.09
	-13.7	-14	2.21	2.21	2.21	2.21	2.21
	-11.7	-12	2.33	2.33	2.33	2.33	2.33
	-9.6	-10	2.45	2.45	2.45	2.45	2.45
	-7.5	-8	2.60	2.60	2.60	2.60	2.60
	-5.5	-6	2.75	2.75	2.75	2.75	2.75
	-3.4	-4	2.85	2.84	2.84	2.81	2.78
	-1.3	-2	2.94	2.94	2.93	2.87	2.82
	0.8	0	3.10	3.06	3.02	2.91	2.80
	3.9	3	3.37	3.25	3.13	2.95	2.78
	7.0	6	3.68	3.44	3.20	2.98	2.75
	10.1	9	3.66	3.42	3.19	2.96	2.73
	13.2	12	3.63	3.40	3.17	2.94	2.70
	16.9	15.5	3.60	3.37	3.14	2.91	2.68

Air flow	Ambient air temp. (°CDB)	Indoor air temperature 21 °CDB 14 °CWB TC	21 °CDB 14 °CWB SHC	23 °CDB 16 °CWB TC	23 °CDB 16 °CWB SHC	26 °CDB 18 °CWB TC	26 °CDB 18 °CWB SHC	27 °CDB 19 °CWB TC	27 °CDB 19 °CWB SHC	28 °CDB 20 °CWB TC	28 °CDB 20 °CWB SHC	31 °CDB 22 °CWB TC	31 °CDB 22 °CWB SHC	33 °CDB 24 °CWB TC	33 °CDB 24 °CWB SHC
Me 7.00 (m³/min)	10			2.30	1.81	2.74	2.04	2.97	2.10	3.16	2.13	3.54	2.29	3.67	2.23
	12			2.30	1.81	2.74	2.04	2.97	2.10	3.15	2.12	3.52	2.28	3.66	2.22
	14			2.30	1.81	2.74	2.04	2.97	2.10	3.15	2.12	3.51	2.28	3.64	2.22
	16			2.30	1.81	2.74	2.04	2.97	2.10	3.14	2.12	3.50	2.27	3.63	2.21
	18			2.30	1.81	2.74	2.04	2.97	2.10	3.14	2.12	3.49	2.27	3.61	2.21
	20			2.30	1.81	2.74	2.04	2.97	2.10	3.14	2.12	3.47	2.26	3.59	2.20
	22			2.29	1.80	2.74	2.04	2.97	2.10	3.12	2.11	3.43	2.25	3.54	2.18
	24			2.29	1.80	2.74	2.04	2.97	2.10	3.11	2.10	3.39	2.23	3.50	2.17
	26			2.29	1.80	2.73	2.04	2.94	2.08	3.07	2.09	3.33	2.21	3.44	2.15
	28	2.07	1.78	2.28	1.80	2.72	2.03	2.91	2.07	3.03	2.07	3.28	2.19	3.39	2.13
	30	2.07	1.78	2.28	1.80	2.70	2.02	2.88	2.05	3.00	2.06	3.23	2.17	3.34	2.11
	32	2.07	1.78	2.27	1.80	2.67	2.01	2.86	2.05	2.96	2.04	3.18	2.15	3.29	2.09
	34	2.07	1.78	2.27	1.80	2.66	2.01	2.82	2.03	2.92	2.02	3.11	2.13	3.22	2.07
	35	2.07	1.78	2.26	1.79	2.66	2.01	2.80	2.02	2.89	2.01	3.08	2.11	3.18	2.06
	36	2.07	1.78	2.26	1.79	2.64	2.00	2.79	2.02	2.86	2.00	3.02	2.09	3.12	2.03
	38	2.07	1.78	2.25	1.78	2.60	1.98	2.76	2.01	2.81	1.98	2.91	2.05	3.00	1.99
	39	2.07	1.78	2.25	1.78	2.58	1.97	2.74	2.00	2.78	1.97	2.86	2.03	2.94	1.97
	41	2.07	1.78	2.24	1.78	2.50	1.94	2.63	1.95	2.66	1.92	2.73	1.98	2.80	1.92
	43	2.07	1.78	2.24	1.78	2.43	1.91	2.52	1.91	2.55	1.88	2.60	1.93	2.66	1.87

Air flow	Ambient air temp. DB	Ambient air temp. WB	Indoor air temp. 16 °CDB	18 °CDB	20 °CDB	22 °CDB	24 °CDB
Me 7.00 (m³/min)	-19.8	-20	1.86	1.86	1.86	1.86	1.86
	-17.8	-18	1.98	1.98	1.98	1.98	1.98
	-15.7	-16	2.09	2.09	2.09	2.09	2.09
	-13.7	-14	2.21	2.21	2.21	2.21	2.21
	-11.7	-12	2.33	2.33	2.33	2.33	2.33
	-9.6	-10	2.45	2.45	2.45	2.45	2.45
	-7.5	-8	2.60	2.60	2.60	2.60	2.60
	-5.5	-6	2.75	2.75	2.75	2.75	2.75
	-3.4	-4	2.85	2.84	2.84	2.81	2.78
	-1.3	-2	2.94	2.94	2.93	2.87	2.82
	0.8	0	3.10	3.06	3.02	2.91	2.80
	3.9	3	3.37	3.25	3.13	2.95	2.78
	7.0	6	3.68	3.44	3.20	2.98	2.75
	10.1	9	3.66	3.42	3.19	2.96	2.73
	13.2	12	3.63	3.40	3.17	2.94	2.70
	16.9	15.5	3.60	3.37	3.14	2.91	2.68

Air flow	Ambient air temp. (°CDB)	Indoor air temperature 21 °CDB 14 °CWB TC	21 °CDB 14 °CWB SHC	23 °CDB 16 °CWB TC	23 °CDB 16 °CWB SHC	26 °CDB 18 °CWB TC	26 °CDB 18 °CWB SHC	27 °CDB 19 °CWB TC	27 °CDB 19 °CWB SHC	28 °CDB 20 °CWB TC	28 °CDB 20 °CWB SHC	31 °CDB 22 °CWB TC	31 °CDB 22 °CWB SHC	33 °CDB 24 °CWB TC	33 °CDB 24 °CWB SHC
Lo 5.4 (m³/min)	10			1.93	1.48	2.31	1.68	2.50	1.72	2.66	1.75	2.98	1.89	3.10	1.84
	12			1.93	1.48	2.31	1.68	2.50	1.72	2.66	1.75	2.97	1.88	3.08	1.83
	14			1.93	1.48	2.31	1.68	2.50	1.72	2.65	1.74	2.96	1.88	3.07	1.82
	16			1.93	1.48	2.31	1.68	2.50	1.72	2.65	1.74	2.95	1.87	3.06	1.82
	18			1.93	1.48	2.31	1.68	2.50	1.72	2.65	1.74	2.94	1.87	3.04	1.81
	20			1.93	1.48	2.31	1.68	2.50	1.72	2.64	1.74	2.93	1.86	3.03	1.81
	22			1.93	1.48	2.31	1.68	2.50	1.72	2.63	1.73	2.89	1.85	2.99	1.79
	24			1.93	1.48	2.31	1.68	2.50	1.72	2.62	1.73	2.85	1.83	2.95	1.78
	26			1.93	1.48	2.30	1.67	2.48	1.71	2.59	1.72	2.81	1.82	2.90	1.76
	28	1.75	1.46	1.93	1.48	2.29	1.67	2.45	1.70	2.56	1.70	2.76	1.79	2.86	1.75
	30	1.75	1.46	1.92	1.47	2.27	1.65	2.43	1.69	2.53	1.69	2.72	1.78	2.81	1.73
	32	1.75	1.46	1.92	1.47	2.25	1.65	2.41	1.68	2.50	1.68	2.68	1.76	2.77	1.71
	34	1.75	1.46	1.91	1.47	2.25	1.65	2.38	1.67	2.46	1.66	2.62	1.74	2.71	1.69
	35	1.75	1.46	1.91	1.47	2.24	1.64	2.36	1.65	2.44	1.65	2.59	1.73	2.68	1.68
	36	1.75	1.46	1.90	1.47	2.23	1.64	2.35	1.66	2.41	1.64	2.55	1.71	2.63	1.66
	38	1.75	1.46	1.90	1.47	2.19	1.62	2.32	1.64	2.37	1.62	2.45	1.67	2.53	1.62
	39	1.75	1.46	1.90	1.47	2.17	1.61	2.31	1.63	2.34	1.61	2.41	1.65	2.48	1.61
	41	1.75	1.46	1.89	1.46	2.11	1.59	2.22	1.60	2.25	1.57	2.30	1.62	2.36	1.57
	43	1.75	1.46	1.88	1.46	2.04	1.56	2.12	1.56	2.15	1.53	2.19	1.58	2.24	1.53

Air flow	Ambient air temp. DB	Ambient air temp. WB	Indoor air temp. 16 °CDB	18 °CDB	20 °CDB	22 °CDB	24 °CDB
Lo 5.4 (m³/min)	-19.8	-20	1.52	1.52	1.52	1.52	1.52
	-17.8	-18	1.62	1.62	1.62	1.62	1.62
	-15.7	-16	1.72	1.72	1.72	1.72	1.72
	-13.7	-14	1.81	1.81	1.81	1.81	1.81
	-11.7	-12	1.91	1.91	1.91	1.91	1.91
	-9.6	-10	2.01	2.01	2.01	2.01	2.01
	-7.5	-8	2.13	2.13	2.13	2.13	2.13
	-5.5	-6	2.25	2.25	2.25	2.25	2.25
	-3.4	-4	2.33	2.33	2.33	2.30	2.28
	-1.3	-2	2.41	2.40	2.40	2.35	2.31
	0.8	0	2.54	2.51	2.47	2.38	2.29
	3.9	3	2.76	2.66	2.56	2.42	2.27
	7.0	6	3.01	2.82	2.62	2.44	2.25
	10.1	9	2.99	2.80	2.61	2.42	2.23
	13.2	12	2.97	2.78	2.59	2.40	2.21
	16.9	15.5	2.95	2.76	2.57	2.38	2.19

Note(1) This data shows average statuses out of those possible to occur in the system control.
(Depending on controls, there may be ranges where the operation is not conducted continuously.)
(2) Symbols are as follows
TC :Total cooling capacity(kW)
SHC :Sensible heat capacity(kW)

Cool mode	Uhi	Hi	Me	Lo
Air flow	7.80	7	7.00	5.4
TC	2.99	2.80	2.80	2.36
SHF	0.73	0.72	0.72	0.70

Heat mode	Uhi	Hi	Me	Lo
Air flow	7.8	7	7.00	5.4
Heating capacity	3.46	3.20	3.20	2.62

Model **FDTQ36KXE6** Cool Mode

Air flow	Ambient air temp. (°CDB)	Indoor air temperature 21 °CDB 14 °CWB TC	21 °CDB 14 °CWB SHC	23 °CDB 16 °CWB TC	23 °CDB 16 °CWB SHC	26 °CDB 18 °CWB TC	26 °CDB 18 °CWB SHC	27 °CDB 19 °CWB TC	27 °CDB 19 °CWB SHC	28 °CDB 20 °CWB TC	28 °CDB 20 °CWB SHC	31 °CDB 22 °CWB TC	31 °CDB 22 °CWB SHC	33 °CDB 24 °CWB TC	33 °CDB 24 °CWB SHC
Uhi	10			3.21	2.35	3.84	2.66	4.16	2.75	4.42	2.79	4.95	3.01	5.14	2.92
	12			3.21	2.35	3.84	2.66	4.16	2.75	4.41	2.78	4.93	3.00	5.12	2.90
	14			3.21	2.35	3.84	2.66	4.16	2.75	4.41	2.78	4.92	2.99	5.10	2.90
	16			3.21	2.35	3.84	2.66	4.16	2.75	4.40	2.78	4.90	2.99	5.08	2.89
	18			3.21	2.35	3.84	2.66	4.16	2.75	4.40	2.78	4.88	2.97	5.05	2.88
	20			3.21	2.35	3.84	2.66	4.16	2.75	4.39	2.78	4.86	2.97	5.03	2.87
	22			3.21	2.35	3.84	2.66	4.16	2.75	4.37	2.77	4.80	2.94	4.96	2.85
7.8	24			3.20	2.34	3.84	2.66	4.16	2.75	4.35	2.76	4.74	2.91	4.89	2.82
(m^3/min)	26			3.20	2.34	3.82	2.66	4.12	2.73	4.30	2.74	4.66	2.88	4.82	2.79
	28	2.90	2.30	3.20	2.34	3.80	2.65	4.08	2.71	4.25	2.71	4.59	2.85	4.74	2.76
	30	2.90	2.30	3.19	2.33	3.77	2.63	4.04	2.69	4.20	2.69	4.52	2.82	4.67	2.73
	32	2.90	2.30	3.18	2.33	3.74	2.62	4.00	2.67	4.15	2.67	4.45	2.79	4.60	2.71
	34	2.90	2.30	3.17	2.33	3.73	2.61	3.95	2.65	4.08	2.64	4.36	2.76	4.51	2.67
	35	2.90	2.30	3.17	2.33	3.72	2.61	3.92	2.63	4.05	2.63	4.31	2.73	4.46	2.65
	36	2.90	2.30	3.16	2.32	3.70	2.60	3.90	2.63	4.01	2.61	4.23	2.70	4.37	2.62
	38	2.90	2.30	3.16	2.32	3.64	2.57	3.86	2.61	3.93	2.57	4.08	2.64	4.20	2.56
	39	2.90	2.30	3.15	2.32	3.61	2.55	3.84	2.60	3.89	2.55	4.00	2.61	4.11	2.51
	41	2.90	2.30	3.14	2.31	3.50	2.51	3.68	2.52	3.73	2.48	3.82	2.53	3.92	2.45
	43	2.90	2.30	3.13	2.31	3.40	2.46	3.53	2.46	3.57	2.42	3.64	2.47	3.73	2.39

Heat Mode

Air flow	Ambient air temp. DB	Ambient air temp. WB	Indoor air temp. 16 °CDB	18 °CDB	20 °CDB	22 °CDB	24 °CDB
Uhi	-19.8	-20	2.53	2.53	2.53	2.53	2.53
	-17.8	-18	2.70	2.70	2.70	2.70	2.70
	-15.7	-16	2.86	2.86	2.86	2.86	2.86
	-13.7	-14	3.02	3.02	3.02	3.02	3.02
	-11.7	-12	3.19	3.19	3.19	3.19	3.19
	-9.6	-10	3.35	3.35	3.35	3.35	3.35
	-7.5	-8	3.55	3.55	3.55	3.55	3.55
7.8	-5.5	-6	3.76	3.76	3.76	3.76	3.76
(m^3/min)	-3.4	-4	3.89	3.88	3.88	3.84	3.80
	-1.3	-2	4.02	4.01	4.00	3.92	3.85
	0.8	0	4.24	4.18	4.12	3.97	3.82
	3.9	3	4.60	4.44	4.27	4.03	3.79
	7.0	6	5.03	4.70	4.37	4.06	3.76
	10.1	9	4.99	4.67	4.35	4.04	3.73
	13.2	12	4.96	4.64	4.33	4.01	3.69
	16.9	15.5	4.92	4.60	4.29	3.97	3.65

Air flow	Ambient air temp. (°CDB)	Indoor air temperature 21 °CDB 14 °CWB TC	21 °CDB 14 °CWB SHC	23 °CDB 16 °CWB TC	23 °CDB 16 °CWB SHC	26 °CDB 18 °CWB TC	26 °CDB 18 °CWB SHC	27 °CDB 19 °CWB TC	27 °CDB 19 °CWB SHC	28 °CDB 20 °CWB TC	28 °CDB 20 °CWB SHC	31 °CDB 22 °CWB TC	31 °CDB 22 °CWB SHC	33 °CDB 24 °CWB TC	33 °CDB 24 °CWB SHC
Hi	10			2.95	2.15	3.53	2.45	3.82	2.52	4.06	2.56	4.55	2.76	4.72	2.68
	12			2.95	2.15	3.53	2.45	3.82	2.52	4.05	2.56	4.53	2.75	4.70	2.67
	14			2.95	2.15	3.53	2.45	3.82	2.52	4.05	2.56	4.51	2.74	4.68	2.66
	16			2.95	2.15	3.53	2.45	3.82	2.52	4.04	2.55	4.50	2.74	4.66	2.66
	18			2.95	2.15	3.53	2.45	3.82	2.52	4.04	2.55	4.48	2.73	4.64	2.65
	20			2.95	2.15	3.53	2.45	3.82	2.52	4.03	2.55	4.47	2.73	4.62	2.64
	22			2.95	2.15	3.53	2.45	3.82	2.52	4.01	2.54	4.41	2.70	4.56	2.62
7	24			2.94	2.15	3.52	2.44	3.82	2.52	3.99	2.53	4.35	2.68	4.49	2.59
(m^3/min)	26			2.94	2.15	3.51	2.44	3.78	2.50	3.95	2.51	4.28	2.64	4.43	2.56
	28	2.66	2.11	2.94	2.15	3.49	2.43	3.74	2.48	3.90	2.49	4.22	2.62	4.36	2.53
	30	2.66	2.11	2.93	2.15	3.47	2.42	3.71	2.47	3.86	2.47	4.15	2.58	4.29	2.50
	32	2.66	2.11	2.92	2.14	3.44	2.41	3.67	2.45	3.81	2.45	4.09	2.56	4.23	2.48
	34	2.66	2.11	2.91	2.14	3.43	2.40	3.62	2.43	3.75	2.42	4.00	2.52	4.14	2.45
	35	2.66	2.11	2.91	2.14	3.42	2.40	3.60	2.41	3.72	2.41	3.96	2.51	4.09	2.43
	36	2.66	2.11	2.91	2.14	3.39	2.38	3.58	2.41	3.68	2.39	3.89	2.48	4.02	2.41
	38	2.66	2.11	2.90	2.13	3.34	2.36	3.55	2.40	3.61	2.36	3.74	2.42	3.86	2.35
	39	2.66	2.11	2.89	2.12	3.32	2.35	3.53	2.39	3.58	2.35	3.67	2.39	3.78	2.32
	41	2.66	2.11	2.88	2.12	3.22	2.30	3.38	2.32	3.43	2.28	3.51	2.33	3.60	2.25
	43	2.66	2.11	2.87	2.11	3.12	2.26	3.24	2.26	3.28	2.22	3.35	2.27	3.42	2.19

Air flow	Ambient air temp. DB	Ambient air temp. WB	Indoor air temp. 16 °CDB	18 °CDB	20 °CDB	22 °CDB	24 °CDB
Hi	-19.8	-20	2.32	2.32	2.32	2.32	2.32
	-17.8	-18	2.47	2.47	2.47	2.47	2.47
	-15.7	-16	2.62	2.62	2.62	2.62	2.62
	-13.7	-14	2.77	2.77	2.77	2.77	2.77
	-11.7	-12	2.92	2.92	2.92	2.92	2.92
	-9.6	-10	3.07	3.07	3.07	3.07	3.07
	-7.5	-8	3.25	3.25	3.25	3.25	3.25
7	-5.5	-6	3.44	3.44	3.44	3.44	3.44
(m^3/min)	-3.4	-4	3.56	3.56	3.55	3.52	3.48
	-1.3	-2	3.68	3.67	3.66	3.59	3.52
	0.8	0	3.88	3.83	3.77	3.64	3.50
	3.9	3	4.21	4.06	3.91	3.69	3.47
	7.0	6	4.60	4.30	4.00	3.72	3.44
	10.1	9	4.57	4.28	3.99	3.70	3.41
	13.2	12	4.54	4.25	3.96	3.67	3.38
	16.9	15.5	4.51	4.22	3.93	3.64	3.35

Air flow	Ambient air temp. (°CDB)	Indoor air temperature 21 °CDB 14 °CWB TC	21 °CDB 14 °CWB SHC	23 °CDB 16 °CWB TC	23 °CDB 16 °CWB SHC	26 °CDB 18 °CWB TC	26 °CDB 18 °CWB SHC	27 °CDB 19 °CWB TC	27 °CDB 19 °CWB SHC	28 °CDB 20 °CWB TC	28 °CDB 20 °CWB SHC	31 °CDB 22 °CWB TC	31 °CDB 22 °CWB SHC	33 °CDB 24 °CWB TC	33 °CDB 24 °CWB SHC
Me	10			2.95	2.15	3.53	2.45	3.82	2.52	4.06	2.56	4.55	2.76	4.72	2.68
	12			2.95	2.15	3.53	2.45	3.82	2.52	4.05	2.56	4.53	2.75	4.70	2.67
	14			2.95	2.15	3.53	2.45	3.82	2.52	4.05	2.56	4.51	2.74	4.68	2.66
	16			2.95	2.15	3.53	2.45	3.82	2.52	4.04	2.55	4.50	2.74	4.66	2.66
	18			2.95	2.15	3.53	2.45	3.82	2.52	4.04	2.55	4.48	2.73	4.64	2.65
	20			2.95	2.15	3.53	2.45	3.82	2.52	4.03	2.55	4.47	2.73	4.62	2.64
	22			2.95	2.15	3.53	2.45	3.82	2.52	4.01	2.54	4.41	2.70	4.56	2.62
7.00	24			2.94	2.15	3.52	2.44	3.82	2.52	3.99	2.53	4.35	2.68	4.49	2.59
(m^3/min)	26			2.94	2.15	3.51	2.44	3.78	2.50	3.95	2.51	4.28	2.64	4.43	2.56
	28	2.66	2.11	2.94	2.15	3.49	2.43	3.74	2.48	3.90	2.49	4.22	2.62	4.36	2.53
	30	2.66	2.11	2.93	2.15	3.47	2.42	3.71	2.47	3.86	2.47	4.15	2.58	4.29	2.50
	32	2.66	2.11	2.92	2.14	3.44	2.41	3.67	2.45	3.81	2.45	4.09	2.56	4.23	2.48
	34	2.66	2.11	2.91	2.14	3.43	2.40	3.62	2.43	3.75	2.42	4.00	2.52	4.14	2.45
	35	2.66	2.11	2.91	2.14	3.42	2.40	3.60	2.41	3.72	2.41	3.96	2.51	4.09	2.43
	36	2.66	2.11	2.91	2.14	3.39	2.38	3.58	2.41	3.68	2.39	3.89	2.48	4.02	2.41
	38	2.66	2.11	2.90	2.13	3.34	2.36	3.55	2.40	3.61	2.36	3.74	2.42	3.86	2.35
	39	2.66	2.11	2.89	2.12	3.32	2.35	3.53	2.39	3.58	2.35	3.67	2.39	3.78	2.32
	41	2.66	2.11	2.88	2.12	3.22	2.30	3.38	2.32	3.43	2.28	3.51	2.33	3.60	2.25
	43	2.66	2.11	2.87	2.11	3.12	2.26	3.24	2.26	3.28	2.22	3.35	2.27	3.42	2.19

Air flow	Ambient air temp. DB	Ambient air temp. WB	Indoor air temp. 16 °CDB	18 °CDB	20 °CDB	22 °CDB	24 °CDB
Me	-19.8	-20	2.32	2.32	2.32	2.32	2.32
	-17.8	-18	2.47	2.47	2.47	2.47	2.47
	-15.7	-16	2.62	2.62	2.62	2.62	2.62
	-13.7	-14	2.77	2.77	2.77	2.77	2.77
	-11.7	-12	2.92	2.92	2.92	2.92	2.92
	-9.6	-10	3.07	3.07	3.07	3.07	3.07
	-7.5	-8	3.25	3.25	3.25	3.25	3.25
7.00	-5.5	-6	3.44	3.44	3.44	3.44	3.44
(m^3/min)	-3.4	-4	3.56	3.56	3.55	3.52	3.48
	-1.3	-2	3.68	3.67	3.66	3.59	3.52
	0.8	0	3.88	3.83	3.77	3.64	3.50
	3.9	3	4.21	4.06	3.91	3.69	3.47
	7.0	6	4.60	4.30	4.00	3.72	3.44
	10.1	9	4.57	4.28	3.99	3.70	3.41
	13.2	12	4.54	4.25	3.96	3.67	3.38
	16.9	15.5	4.51	4.22	3.93	3.64	3.35

Air flow	Ambient air temp. (°CDB)	Indoor air temperature 21 °CDB 14 °CWB TC	21 °CDB 14 °CWB SHC	23 °CDB 16 °CWB TC	23 °CDB 16 °CWB SHC	26 °CDB 18 °CWB TC	26 °CDB 18 °CWB SHC	27 °CDB 19 °CWB TC	27 °CDB 19 °CWB SHC	28 °CDB 20 °CWB TC	28 °CDB 20 °CWB SHC	31 °CDB 22 °CWB TC	31 °CDB 22 °CWB SHC	33 °CDB 24 °CWB TC	33 °CDB 24 °CWB SHC
Lo	10			2.39	1.72	2.85	1.95	3.08	2.01	3.28	2.04	3.68	2.21	3.82	2.14
	12			2.39	1.72	2.85	1.95	3.08	2.01	3.28	2.04	3.66	2.20	3.80	2.13
	14			2.39	1.72	2.85	1.95	3.08	2.01	3.27	2.04	3.65	2.19	3.78	2.12
	16			2.39	1.72	2.85	1.95	3.08	2.01	3.27	2.04	3.64	2.19	3.77	2.12
	18			2.39	1.72	2.85	1.95	3.08	2.01	3.26	2.03	3.62	2.18	3.75	2.11
	20			2.39	1.72	2.85	1.95	3.08	2.01	3.26	2.03	3.61	2.17	3.73	2.10
	22			2.38	1.71	2.85	1.95	3.08	2.01	3.24	2.03	3.56	2.15	3.68	2.08
5.4	24			2.38	1.71	2.85	1.95	3.08	2.01	3.23	2.02	3.52	2.13	3.63	2.06
(m^3/min)	26			2.38	1.71	2.84	1.94	3.06	2.00	3.19	2.00	3.46	2.11	3.58	2.04
	28	2.15	1.68	2.37	1.71	2.82	1.94	3.03	1.98	3.15	1.98	3.41	2.09	3.52	2.02
	30	2.15	1.68	2.37	1.71	2.80	1.92	3.00	1.97	3.12	1.97	3.36	2.07	3.47	2.00
	32	2.15	1.68	2.36	1.70	2.78	1.91	2.97	1.96	3.08	1.95	3.30	2.04	3.42	1.98
	34	2.15	1.68	2.36	1.70	2.77	1.91	2.93	1.94	3.03	1.93	3.23	2.01	3.35	1.95
	35	2.15	1.68	2.35	1.70	2.76	1.91	2.91	1.92	3.01	1.92	3.20	1.99	3.31	1.93
	36	2.15	1.68	2.35	1.70	2.74	1.90	2.90	1.92	2.98	1.91	3.14	1.97	3.25	1.91
	38	2.15	1.68	2.34	1.69	2.70	1.88	2.87	1.91	2.92	1.88	3.03	1.93	3.12	1.86
	39	2.15	1.68	2.34	1.69	2.68	1.87	2.85	1.90	2.89	1.87	2.97	1.90	3.05	1.84
	41	2.15	1.68	2.33	1.69	2.60	1.83	2.74	1.85	2.77	1.82	2.84	1.85	2.91	1.79
	43	2.15	1.68	2.32	1.68	2.52	1.79	2.62	1.79	2.65	1.76	2.71	1.80	2.77	1.74

Air flow	Ambient air temp. DB	Ambient air temp. WB	Indoor air temp. 16 °CDB	18 °CDB	20 °CDB	22 °CDB	24 °CDB
Lo	-19.8	-20	1.86	1.86	1.86	1.86	1.86
	-17.8	-18	1.98	1.98	1.98	1.98	1.98
	-15.7	-16	2.09	2.09	2.09	2.09	2.09
	-13.7	-14	2.21	2.21	2.21	2.21	2.21
	-11.7	-12	2.33	2.33	2.33	2.33	2.33
	-9.6	-10	2.45	2.45	2.45	2.45	2.45
	-7.5	-8	2.60	2.60	2.60	2.60	2.60
5.4	-5.5	-6	2.75	2.75	2.75	2.75	2.75
(m^3/min)	-3.4	-4	2.85	2.84	2.84	2.81	2.78
	-1.3	-2	2.94	2.94	2.93	2.87	2.82
	0.8	0	3.10	3.06	3.02	2.91	2.80
	3.9	3	3.37	3.25	3.13	2.95	2.78
	7.0	6	3.68	3.44	3.20	2.98	2.75
	10.1	9	3.66	3.42	3.19	2.96	2.73
	13.2	12	3.63	3.40	3.17	2.94	2.70
	16.9	15.5	3.60	3.37	3.14	2.91	2.68

Note(1) This data shows average statuses out of those possible to occur in the system control.
(Depending on controls, there may be ranges where the operation is not conducted continuously.)

(2) Symbols are as follows
TC :Total cooling capacity(kW)
SHC :Sensible heat capacity(kW)

Cool mode	Uhi	Hi	Me	Lo
Air flow	7.80	7	7.00	5.4
TC	3.92	3.60	3.60	2.91
SHF	0.67	0.67	0.67	0.66

Heat mode	Uhi	Hi	Me	Lo
Air flow	7.8	7	7.00	5.4
Heating capacity	4.37	4.00	4.00	3.20

Model **FDTS45KXE6** Cool Mode

Air flow	Ambient air temp. (°CDB)	Indoor air temperature 21 °CDB 14 °CWB TC	21 °CDB 14 °CWB SHC	23 °CDB 16 °CWB TC	23 °CDB 16 °CWB SHC	26 °CDB 18 °CWB TC	26 °CDB 18 °CWB SHC	27 °CDB 19 °CWB TC	27 °CDB 19 °CWB SHC	28 °CDB 20 °CWB TC	28 °CDB 20 °CWB SHC	31 °CDB 22 °CWB TC	31 °CDB 22 °CWB SHC	33 °CDB 24 °CWB TC	33 °CDB 24 °CWB SHC
	10			3.76	3.45	4.50	3.91	4.87	3.97	5.18	4.02	5.80	4.33	6.02	4.23
	12			3.76	3.45	4.50	3.91	4.87	3.97	5.17	4.02	5.78	4.32	5.99	4.22
	14			3.76	3.45	4.50	3.91	4.87	3.97	5.16	4.01	5.76	4.32	5.97	4.22
	16			3.76	3.45	4.50	3.91	4.87	3.97	5.16	4.01	5.74	4.31	5.94	4.21
	18			3.76	3.45	4.50	3.91	4.87	3.97	5.15	4.01	5.71	4.30	5.92	4.20
Uhi	20			3.76	3.45	4.50	3.91	4.87	3.97	5.14	4.00	5.69	4.29	5.89	4.19
	22			3.76	3.45	4.50	3.91	4.87	3.97	5.12	4.00	5.62	4.27	5.81	4.17
15	24			3.75	3.44	4.49	3.90	4.87	3.97	5.09	3.98	5.55	4.24	5.73	4.14
(m³/min)	26			3.75	3.44	4.47	3.90	4.82	3.96	5.03	3.96	5.46	4.21	5.64	4.11
	28	3.40	3.26	3.75	3.44	4.45	3.89	4.77	3.94	4.97	3.94	5.37	4.18	5.55	4.09
	30	3.40	3.26	3.74	3.44	4.42	3.88	4.73	3.92	4.92	3.92	5.29	4.16	5.47	4.06
	32	3.40	3.26	3.73	3.43	4.38	3.85	4.68	3.90	4.86	3.90	5.21	4.13	5.39	4.04
	34	3.40	3.26	3.71	3.43	4.37	3.85	4.62	3.88	4.78	3.87	5.10	4.09	5.28	4.00
	35	3.40	3.26	3.71	3.43	4.36	3.85	4.59	3.86	4.74	3.85	5.05	4.08	5.22	3.99
	36	3.40	3.26	3.70	3.42	4.33	3.83	4.57	3.86	4.70	3.84	4.95	4.05	5.12	3.96
	38	3.40	3.26	3.69	3.42	4.26	3.81	4.52	3.84	4.61	3.81	4.77	3.99	4.92	3.89
	39	3.40	3.26	3.69	3.42	4.23	3.79	4.50	3.84	4.56	3.78	4.68	3.96	4.82	3.87
	41	3.40	3.26	3.68	3.41	4.10	3.75	4.31	3.76	4.37	3.71	4.48	3.89	4.59	3.80
	43	3.40	3.26	3.66	3.40	3.98	3.70	4.13	3.69	4.18	3.65	4.27	3.82	4.36	3.73

Heat Mode

Air flow	Ambient air temp. DB	Ambient air temp. WB	Indoor air temp. 16 °CDB	18 °CDB	20 °CDB	22 °CDB	24 °CDB
	-19.8	-20	2.96	2.96	2.96	2.96	2.96
	-17.8	-18	3.15	3.15	3.15	3.15	3.15
	-15.7	-16	3.34	3.34	3.34	3.34	3.34
	-13.7	-14	3.53	3.53	3.53	3.53	3.53
	-11.7	-12	3.72	3.72	3.72	3.72	3.72
Uhi	-9.6	-10	3.91	3.91	3.91	3.91	3.91
	-7.5	-8	4.15	4.15	4.15	4.15	4.15
15	-5.5	-6	4.39	4.39	4.39	4.39	4.39
(m³/min)	-3.4	-4	4.54	4.53	4.53	4.48	4.44
	-1.3	-2	4.69	4.68	4.67	4.58	4.49
	0.8	0	4.95	4.88	4.81	4.63	4.46
	3.9	3	5.37	5.18	4.99	4.70	4.42
	7.0	6	5.87	5.48	5.10	4.74	4.39
	10.1	9	5.83	5.45	5.08	4.71	4.35
	13.2	12	5.79	5.42	5.05	4.68	4.31
	16.9	15.5	5.74	5.37	5.00	4.63	4.26

Air flow	Ambient air temp. (°CDB)	Indoor air temperature 21 °CDB 14 °CWB TC	21 °CDB 14 °CWB SHC	23 °CDB 16 °CWB TC	23 °CDB 16 °CWB SHC	26 °CDB 18 °CWB TC	26 °CDB 18 °CWB SHC	27 °CDB 19 °CWB TC	27 °CDB 19 °CWB SHC	28 °CDB 20 °CWB TC	28 °CDB 20 °CWB SHC	31 °CDB 22 °CWB TC	31 °CDB 22 °CWB SHC	33 °CDB 24 °CWB TC	33 °CDB 24 °CWB SHC
	10			3.69	3.29	4.41	3.73	4.77	3.80	5.07	3.84	5.68	4.16	5.90	4.06
	12			3.69	3.29	4.41	3.73	4.77	3.80	5.07	3.84	5.66	4.15	5.88	4.06
	14			3.69	3.29	4.41	3.73	4.77	3.80	5.06	3.83	5.64	4.14	5.85	4.05
	16			3.69	3.29	4.41	3.73	4.77	3.80	5.05	3.83	5.62	4.13	5.83	4.04
	18			3.69	3.29	4.41	3.73	4.77	3.80	5.05	3.83	5.60	4.13	5.80	4.01
Hi	20			3.69	3.29	4.41	3.73	4.77	3.80	5.04	3.83	5.58	4.12	5.78	4.00
	22			3.68	3.29	4.41	3.73	4.77	3.80	5.02	3.82	5.51	4.10	5.70	3.97
14	24			3.68	3.29	4.41	3.73	4.77	3.80	4.99	3.81	5.44	4.05	5.62	3.95
(m³/min)	26			3.68	3.29	4.39	3.72	4.73	3.79	4.93	3.79	5.35	4.02	5.53	3.92
	28	3.33	3.20	3.67	3.28	4.37	3.71	4.68	3.77	4.88	3.77	5.27	3.99	5.44	3.89
	30	3.33	3.20	3.66	3.28	4.33	3.70	4.64	3.75	4.82	3.75	5.19	3.97	5.36	3.87
	32	3.33	3.20	3.65	3.27	4.30	3.69	4.59	3.73	4.76	3.72	5.11	3.94	5.28	3.84
	34	3.33	3.20	3.64	3.27	4.28	3.68	4.53	3.70	4.69	3.69	5.00	3.90	5.17	3.81
	35	3.33	3.20	3.64	3.27	4.28	3.68	4.50	3.69	4.65	3.68	4.95	3.88	5.12	3.80
	36	3.33	3.20	3.63	3.27	4.24	3.66	4.48	3.69	4.60	3.66	4.86	3.85	5.02	3.77
	38	3.33	3.20	3.62	3.26	4.18	3.64	4.43	3.67	4.52	3.63	4.68	3.79	4.82	3.70
	39	3.33	3.20	3.62	3.26	4.15	3.63	4.41	3.66	4.47	3.61	4.59	3.77	4.72	3.67
	41	3.33	3.20	3.61	3.26	4.02	3.57	4.23	3.59	4.28	3.54	4.39	3.70	4.50	3.61
	43	3.33	3.20	3.59	3.25	3.90	3.52	4.05	3.52	4.09	3.47	4.18	3.63	4.28	3.54

Air flow	Ambient air temp. DB	Ambient air temp. WB	Indoor air temp. 16 °CDB	18 °CDB	20 °CDB	22 °CDB	24 °CDB
	-19.8	-20	2.90	2.90	2.90	2.90	2.90
	-17.8	-18	3.09	3.09	3.09	3.09	3.09
	-15.7	-16	3.27	3.27	3.27	3.27	3.27
	-13.7	-14	3.46	3.46	3.46	3.46	3.46
	-11.7	-12	3.65	3.65	3.65	3.65	3.65
Hi	-9.6	-10	3.83	3.83	3.83	3.83	3.83
	-7.5	-8	4.07	4.07	4.07	4.07	4.07
14	-5.5	-6	4.30	4.30	4.30	4.30	4.30
(m³/min)	-3.4	-4	4.45	4.44	4.44	4.39	4.35
	-1.3	-2	4.60	4.59	4.58	4.49	4.40
	0.8	0	4.85	4.78	4.71	4.54	4.38
	3.9	3	5.26	5.08	4.89	4.61	4.34
	7.0	6	5.75	5.38	5.00	4.65	4.30
	10.1	9	5.71	5.35	4.98	4.62	4.26
	13.2	12	5.68	5.31	4.95	4.59	4.23
	16.9	15.5	5.63	5.27	4.91	4.54	4.18

Air flow	Ambient air temp. (°CDB)	Indoor air temperature 21 °CDB 14 °CWB TC	21 °CDB 14 °CWB SHC	23 °CDB 16 °CWB TC	23 °CDB 16 °CWB SHC	26 °CDB 18 °CWB TC	26 °CDB 18 °CWB SHC	27 °CDB 19 °CWB TC	27 °CDB 19 °CWB SHC	28 °CDB 20 °CWB TC	28 °CDB 20 °CWB SHC	31 °CDB 22 °CWB TC	31 °CDB 22 °CWB SHC	33 °CDB 24 °CWB TC	33 °CDB 24 °CWB SHC
	10			3.35	2.93	4.01	3.31	4.34	3.37	4.61	3.41	5.17	3.68	5.36	3.59
	12			3.35	2.93	4.01	3.31	4.34	3.37	4.61	3.41	5.15	3.67	5.34	3.58
	14			3.35	2.93	4.01	3.31	4.34	3.37	4.60	3.41	5.13	3.67	5.32	3.58
	16			3.35	2.93	4.01	3.31	4.34	3.37	4.59	3.40	5.11	3.66	5.30	3.57
	18			3.35	2.93	4.01	3.31	4.34	3.37	4.59	3.40	5.09	3.65	5.27	3.56
Me	20			3.35	2.93	4.01	3.31	4.34	3.37	4.58	3.40	5.07	3.65	5.25	3.56
	22			3.35	2.93	4.01	3.31	4.34	3.37	4.56	3.39	5.01	3.62	5.18	3.53
12	24			3.34	2.93	4.00	3.31	4.34	3.37	4.54	3.38	4.95	3.60	5.11	3.51
(m³/min)	26			3.34	2.93	3.99	3.30	4.29	3.35	4.49	3.37	4.87	3.57	5.03	3.49
	28	3.03	2.89	3.34	2.93	3.97	3.29	4.25	3.34	4.43	3.34	4.79	3.55	4.95	3.46
	30	3.03	2.89	3.33	2.92	3.94	3.28	4.21	3.32	4.38	3.32	4.72	3.52	4.87	3.43
	32	3.03	2.89	3.32	2.92	3.91	3.27	4.17	3.31	4.33	3.30	4.64	3.50	4.80	3.41
	34	3.03	2.89	3.31	2.91	3.89	3.26	4.12	3.29	4.26	3.27	4.54	3.46	4.70	3.38
	35	3.03	2.89	3.30	2.91	3.89	3.26	4.09	3.27	4.23	3.26	4.50	3.45	4.65	3.37
	36	3.03	2.89	3.30	2.91	3.86	3.25	4.07	3.27	4.18	3.24	4.42	3.42	4.56	3.34
	38	3.03	2.89	3.29	2.90	3.80	3.22	4.03	3.25	4.10	3.22	4.25	3.36	4.38	3.28
	39	3.03	2.89	3.29	2.90	3.77	3.21	4.01	3.24	4.06	3.20	4.17	3.34	4.29	3.25
	41	3.03	2.89	3.28	2.90	3.66	3.16	3.84	3.17	3.89	3.13	3.99	3.27	4.09	3.19
	43	3.03	2.89	3.27	2.90	3.54	3.12	3.68	3.11	3.72	3.07	3.80	3.21	3.89	3.13

Air flow	Ambient air temp. DB	Ambient air temp. WB	Indoor air temp. 16 °CDB	18 °CDB	20 °CDB	22 °CDB	24 °CDB
	-19.8	-20	2.63	2.63	2.63	2.63	2.63
	-17.8	-18	2.80	2.80	2.80	2.80	2.80
	-15.7	-16	2.97	2.97	2.97	2.97	2.97
	-13.7	-14	3.14	3.14	3.14	3.14	3.14
	-11.7	-12	3.31	3.31	3.31	3.31	3.31
Me	-9.6	-10	3.48	3.48	3.48	3.48	3.48
	-7.5	-8	3.69	3.69	3.69	3.69	3.69
12	-5.5	-6	3.90	3.90	3.90	3.90	3.90
(m³/min)	-3.4	-4	4.04	4.03	4.03	3.99	3.95
	-1.3	-2	4.18	4.17	4.15	4.07	4.00
	0.8	0	4.40	4.34	4.28	4.13	3.97
	3.9	3	4.78	4.61	4.44	4.19	3.94
	7.0	6	5.22	4.88	4.54	4.22	3.90
	10.1	9	5.19	4.85	4.52	4.20	3.87
	13.2	12	5.15	4.82	4.49	4.17	3.84
	16.9	15.5	5.11	4.78	4.45	4.13	3.80

Air flow	Ambient air temp. (°CDB)	Indoor air temperature 21 °CDB 14 °CWB TC	21 °CDB 14 °CWB SHC	23 °CDB 16 °CWB TC	23 °CDB 16 °CWB SHC	26 °CDB 18 °CWB TC	26 °CDB 18 °CWB SHC	27 °CDB 19 °CWB TC	27 °CDB 19 °CWB SHC	28 °CDB 20 °CWB TC	28 °CDB 20 °CWB SHC	31 °CDB 22 °CWB TC	31 °CDB 22 °CWB SHC	33 °CDB 24 °CWB TC	33 °CDB 24 °CWB SHC
	10			2.98	2.53	3.57	2.87	3.86	2.92	4.11	2.96	4.60	3.20	4.77	3.12
	12			2.98	2.53	3.57	2.87	3.86	2.92	4.10	2.96	4.58	3.19	4.75	3.11
	14			2.98	2.53	3.57	2.87	3.86	2.92	4.09	2.95	4.57	3.19	4.73	3.10
	16			2.98	2.53	3.57	2.87	3.86	2.92	4.09	2.95	4.55	3.18	4.71	3.10
	18			2.98	2.53	3.57	2.87	3.86	2.92	4.08	2.95	4.53	3.17	4.69	3.09
Lo	20			2.98	2.53	3.57	2.87	3.86	2.92	4.08	2.95	4.52	3.17	4.67	3.09
	22			2.98	2.53	3.57	2.87	3.86	2.92	4.06	2.94	4.46	3.15	4.61	3.07
10	24			2.98	2.53	3.56	2.86	3.86	2.92	4.04	2.93	4.40	3.13	4.54	3.04
(m³/min)	26			2.97	2.53	3.55	2.86	3.82	2.91	3.99	2.91	4.33	3.10	4.47	3.02
	28	2.69	2.50	2.97	2.53	3.53	2.85	3.79	2.90	3.94	2.89	4.26	3.07	4.40	2.99
	30	2.69	2.50	2.96	2.52	3.50	2.84	3.75	2.88	3.90	2.88	4.20	3.05	4.34	2.97
	32	2.69	2.50	2.96	2.52	3.48	2.83	3.71	2.87	3.85	2.86	4.13	3.03	4.27	2.95
	34	2.69	2.50	2.95	2.52	3.46	2.82	3.66	2.85	3.79	2.84	4.04	2.99	4.18	2.92
	35	2.69	2.50	2.94	2.51	3.46	2.82	3.64	2.84	3.76	2.83	4.00	2.98	4.14	2.91
	36	2.69	2.50	2.94	2.51	3.43	2.81	3.62	2.83	3.72	2.81	3.93	2.96	4.06	2.88
	38	2.69	2.50	2.93	2.51	3.38	2.78	3.59	2.81	3.65	2.78	3.79	2.90	3.90	2.83
	39	2.69	2.50	2.93	2.51	3.35	2.76	3.57	2.81	3.62	2.76	3.71	2.88	3.82	2.80
	41	2.69	2.50	2.92	2.51	3.25	2.72	3.42	2.74	3.46	2.70	3.55	2.82	3.64	2.75
	43	2.69	2.50	2.91	2.50	3.15	2.69	3.28	2.68	3.31	2.64	3.38	2.76	3.46	2.69

Air flow	Ambient air temp. DB	Ambient air temp. WB	Indoor air temp. 16 °CDB	18 °CDB	20 °CDB	22 °CDB	24 °CDB
	-19.8	-20	2.33	2.33	2.33	2.33	2.33
	-17.8	-18	2.48	2.48	2.48	2.48	2.48
	-15.7	-16	2.63	2.63	2.63	2.63	2.63
	-13.7	-14	2.78	2.78	2.78	2.78	2.78
	-11.7	-12	2.93	2.93	2.93	2.93	2.93
Lo	-9.6	-10	3.08	3.08	3.08	3.08	3.08
	-7.5	-8	3.27	3.27	3.27	3.27	3.27
10	-5.5	-6	3.46	3.46	3.46	3.46	3.46
(m³/min)	-3.4	-4	3.58	3.57	3.57	3.53	3.50
	-1.3	-2	3.70	3.69	3.68	3.61	3.54
	0.8	0	3.90	3.84	3.79	3.65	3.52
	3.9	3	4.23	4.08	3.93	3.71	3.49
	7.0	6	4.62	4.32	4.02	3.74	3.46
	10.1	9	4.59	4.30	4.00	3.72	3.43
	13.2	12	4.56	4.27	3.98	3.69	3.40
	16.9	15.5	4.53	4.24	3.94	3.65	3.36

Note(1) This data shows average statuses out of those possible to occur in the system control.
(Depending on controls, there may be ranges where the operation is not conducted continuously.)

(2) Symbols are as follows
TC :Total cooling capacity(kW)
SHC :Sensible heat capacity(kW)

Cool mode	Uhi	Hi	Me	Lo
Air flow	15.00	14	12	10
TC	4.59	4.50	4.09	3.64
SHF	0.84	0.82	0.80	0.78

Heat mode	Uhi	Hi	Me	Lo
Air flow	15	14	12	10
Heating capacity	5.10	5.00	4.54	4.02

Model **FDTS71KXE6** Cool Mode

Air flow	Ambient air temp. (℃DB)	Indoor air temperature 21 ℃DB 14 ℃WB TC	21 ℃DB 14 ℃WB SHC	23 ℃DB 16 ℃WB TC	23 ℃DB 16 ℃WB SHC	26 ℃DB 18 ℃WB TC	26 ℃DB 18 ℃WB SHC	27 ℃DB 19 ℃WB TC	27 ℃DB 19 ℃WB SHC	28 ℃DB 20 ℃WB TC	28 ℃DB 20 ℃WB SHC	31 ℃DB 22 ℃WB TC	31 ℃DB 22 ℃WB SHC	33 ℃DB 24 ℃WB TC	33 ℃DB 24 ℃WB SHC
	10			5.93	4.93	7.09	5.58	7.67	5.69	8.16	5.77	9.15	6.23	9.50	6.07
	12			5.93	4.93	7.09	5.58	7.67	5.69	8.15	5.76	9.11	6.21	9.46	6.06
	14			5.93	4.93	7.09	5.58	7.67	5.69	8.14	5.76	9.08	6.20	9.41	6.04
	16			5.93	4.93	7.09	5.58	7.67	5.69	8.13	5.76	9.05	6.19	9.37	6.03
	18			5.93	4.93	7.09	5.58	7.67	5.69	8.12	5.75	9.01	6.18	9.33	6.01
Uhi	20			5.93	4.93	7.09	5.58	7.67	5.69	8.11	5.75	8.98	6.16	9.29	6.00
	22			5.93	4.93	7.09	5.58	7.67	5.69	8.07	5.73	8.87	6.12	9.16	5.96
19	24			5.92	4.93	7.09	5.58	7.67	5.69	8.03	5.72	8.75	6.08	9.04	5.92
(m³/min)	26			5.91	4.93	7.06	5.56	7.60	5.66	7.94	5.68	8.62	6.03	8.90	5.87
	28	5.36	4.87	5.91	4.93	7.02	5.55	7.53	5.64	7.85	5.65	8.48	5.98	8.76	5.83
	30	5.36	4.87	5.89	4.92	6.97	5.53	7.46	5.61	7.75	5.60	8.35	5.94	8.63	5.78
	32	5.36	4.87	5.88	4.91	6.91	5.50	7.38	5.58	7.66	5.57	8.22	5.89	8.50	5.73
	34	5.36	4.87	5.86	4.90	6.89	5.49	7.29	5.54	7.54	5.52	8.05	5.82	8.32	5.67
	35	5.36	4.87	5.85	4.90	6.88	5.49	7.24	5.50	7.48	5.50	7.96	5.79	8.23	5.64
	36	5.36	4.87	5.84	4.90	6.83	5.47	7.20	5.50	7.41	5.47	7.82	5.74	8.07	5.59
	38	5.36	4.87	5.83	4.89	6.72	5.42	7.13	5.48	7.26	5.41	7.53	5.64	7.76	5.49
	39	5.36	4.87	5.82	4.89	6.67	5.40	7.10	5.46	7.19	5.39	7.39	5.59	7.60	5.43
	41	5.36	4.87	5.80	4.88	6.47	5.30	6.81	5.34	6.89	5.24	7.06	5.47	7.24	5.32
	43	5.36	4.87	5.78	4.87	6.27	5.22	6.52	5.21	6.59	5.13	6.73	5.35	6.88	5.21

Heat Mode

Air flow	Ambient air temp. DB	Ambient air temp. WB	Indoor air temp. 16 ℃CDB	18 ℃CDB	20 ℃CDB	22 ℃CDB	24 ℃CDB
	-19.8	-20	4.73	4.73	4.73	4.73	4.73
	-17.8	-18	5.04	5.04	5.04	5.04	5.04
	-15.7	-16	5.34	5.34	5.34	5.34	5.34
	-13.7	-14	5.65	5.65	5.65	5.65	5.65
	-11.7	-12	5.95	5.95	5.95	5.95	5.95
Uhi	-9.6	-10	6.26	6.26	6.26	6.26	6.26
	-7.5	-8	6.64	6.64	6.64	6.64	6.64
19	-5.5	-6	7.02	7.02	7.02	7.02	7.02
(m³/min)	-3.4	-4	7.26	7.25	7.24	7.17	7.10
	-1.3	-2	7.51	7.49	7.47	7.32	7.18
	0.8	0	7.92	7.80	7.69	7.42	7.14
	3.9	3	8.59	8.28	7.98	7.53	7.08
	7.0	6	9.38	8.77	8.16	7.59	7.02
	10.1	9	9.32	8.73	8.13	7.54	6.96
	13.2	12	9.26	8.67	8.08	7.49	6.90
	16.9	15.5	9.19	8.60	8.01	7.42	6.82

Air flow	Ambient air temp. (℃DB)	Indoor air temperature 21 ℃DB 14 ℃WB TC	21 ℃DB 14 ℃WB SHC	23 ℃DB 16 ℃WB TC	23 ℃DB 16 ℃WB SHC	26 ℃DB 18 ℃WB TC	26 ℃DB 18 ℃WB SHC	27 ℃DB 19 ℃WB TC	27 ℃DB 19 ℃WB SHC	28 ℃DB 20 ℃WB TC	28 ℃DB 20 ℃WB SHC	31 ℃DB 22 ℃WB TC	31 ℃DB 22 ℃WB SHC	33 ℃DB 24 ℃WB TC	33 ℃DB 24 ℃WB SHC
	10			5.82	4.76	6.96	5.38	7.53	5.51	8.01	5.57	8.97	6.01	9.31	5.86
	12			5.82	4.76	6.96	5.38	7.53	5.51	8.00	5.57	8.94	6.00	9.27	5.84
	14			5.82	4.76	6.96	5.38	7.53	5.51	7.99	5.57	8.90	5.98	9.23	5.83
	16			5.82	4.76	6.96	5.38	7.53	5.51	7.97	5.56	8.87	5.97	9.19	5.81
	18			5.82	4.76	6.96	5.38	7.53	5.51	7.96	5.55	8.84	5.96	9.15	5.80
Hi	20			5.82	4.76	6.96	5.38	7.53	5.51	7.95	5.55	8.81	5.95	9.11	5.79
	22			5.81	4.76	6.95	5.38	7.53	5.51	7.92	5.54	8.70	5.91	8.99	5.75
18	24			5.80	4.75	6.95	5.38	7.53	5.51	7.88	5.52	8.58	5.87	8.86	5.70
(m³/min)	26			5.80	4.75	6.92	5.37	7.46	5.48	7.79	5.49	8.45	5.82	8.73	5.66
	28	5.25	4.69	5.79	4.75	6.89	5.35	7.38	5.45	7.69	5.45	8.31	5.77	8.59	5.62
	30	5.25	4.69	5.78	4.75	6.83	5.33	7.31	5.42	7.60	5.41	8.19	5.72	8.46	5.57
	32	5.25	4.69	5.77	4.74	6.78	5.31	7.24	5.38	7.51	5.38	8.06	5.68	8.33	5.53
	34	5.25	4.69	5.75	4.73	6.76	5.30	7.15	5.34	7.39	5.32	7.89	5.62	8.16	5.47
	35	5.25	4.69	5.74	4.73	6.75	5.30	7.10	5.33	7.33	5.30	7.80	5.59	8.08	5.44
	36	5.25	4.69	5.73	4.72	6.69	5.27	7.06	5.31	7.26	5.27	7.66	5.52	7.92	5.39
	38	5.25	4.69	5.72	4.72	6.59	5.23	6.99	5.28	7.12	5.22	7.38	5.43	7.61	5.29
	39	5.25	4.69	5.71	4.71	6.54	5.21	6.96	5.27	7.05	5.19	7.24	5.38	7.45	5.24
	41	5.25	4.69	5.69	4.71	6.35	5.12	6.67	5.15	6.76	5.08	6.92	5.26	7.10	5.11
	43	5.25	4.69	5.67	4.70	6.15	5.04	6.39	5.04	6.46	4.94	6.60	5.15	6.75	5.01

Air flow	Ambient air temp. DB	Ambient air temp. WB	Indoor air temp. 16 ℃CDB	18 ℃CDB	20 ℃CDB	22 ℃CDB	24 ℃CDB
	-19.8	-20	4.64	4.64	4.64	4.64	4.64
	-17.8	-18	4.94	4.94	4.94	4.94	4.94
	-15.7	-16	5.24	5.24	5.24	5.24	5.24
	-13.7	-14	5.54	5.54	5.54	5.54	5.54
	-11.7	-12	5.83	5.83	5.83	5.83	5.83
Hi	-9.6	-10	6.13	6.13	6.13	6.13	6.13
	-7.5	-8	6.51	6.51	6.51	6.51	6.51
18	-5.5	-6	6.88	6.88	6.88	6.88	6.88
(m³/min)	-3.4	-4	7.12	7.11	7.10	7.03	6.96
	-1.3	-2	7.36	7.34	7.32	7.18	7.04
	0.8	0	7.76	7.65	7.54	7.27	7.00
	3.9	3	8.42	8.12	7.82	7.38	6.94
	7.0	6	9.20	8.60	8.00	7.44	6.88
	10.1	9	9.14	8.56	7.97	7.40	6.82
	13.2	12	9.08	8.50	7.92	7.34	6.76
	16.9	15.5	9.01	8.43	7.85	7.27	6.69

Air flow	Ambient air temp. (℃DB)	Indoor air temperature 21 ℃DB 14 ℃WB TC	21 ℃DB 14 ℃WB SHC	23 ℃DB 16 ℃WB TC	23 ℃DB 16 ℃WB SHC	26 ℃DB 18 ℃WB TC	26 ℃DB 18 ℃WB SHC	27 ℃DB 19 ℃WB TC	27 ℃DB 19 ℃WB SHC	28 ℃DB 20 ℃WB TC	28 ℃DB 20 ℃WB SHC	31 ℃DB 22 ℃WB TC	31 ℃DB 22 ℃WB SHC	33 ℃DB 24 ℃WB TC	33 ℃DB 24 ℃WB SHC
	10			5.11	4.06	6.10	4.60	6.60	4.71	7.03	4.78	7.87	5.15	8.17	5.02
	12			5.11	4.06	6.10	4.60	6.60	4.71	7.02	4.77	7.84	5.14	8.14	5.01
	14			5.11	4.06	6.10	4.60	6.60	4.71	7.01	4.77	7.81	5.13	8.10	4.99
	16			5.11	4.06	6.10	4.60	6.60	4.71	7.00	4.77	7.78	5.12	8.07	4.98
	18			5.11	4.06	6.10	4.60	6.60	4.71	6.99	4.76	7.76	5.11	8.03	4.96
Me	20			5.11	4.06	6.10	4.60	6.60	4.71	6.98	4.76	7.73	5.10	8.00	4.95
	22			5.10	4.06	6.10	4.60	6.60	4.71	6.95	4.75	7.63	5.05	7.89	4.91
15	24			5.09	4.06	6.10	4.60	6.60	4.71	6.91	4.72	7.53	5.02	7.78	4.88
(m³/min)	26			5.09	4.06	6.07	4.58	6.54	4.68	6.83	4.69	7.41	4.97	7.66	4.84
	28	4.61	4.00	5.08	4.05	6.04	4.57	6.48	4.66	6.75	4.66	7.29	4.93	7.54	4.79
	30	4.61	4.00	5.07	4.05	6.00	4.55	6.42	4.63	6.67	4.63	7.18	4.88	7.43	4.75
	32	4.61	4.00	5.06	4.04	5.95	4.53	6.35	4.60	6.59	4.60	7.07	4.84	7.31	4.71
	34	4.61	4.00	5.04	4.03	5.93	4.52	6.27	4.57	6.49	4.55	6.92	4.79	7.16	4.64
	35	4.61	4.00	5.03	4.03	5.92	4.52	6.23	4.55	6.44	4.53	6.85	4.76	7.09	4.61
	36	4.61	4.00	5.03	4.03	5.87	4.50	6.20	4.54	6.37	4.50	6.73	4.69	6.95	4.57
	38	4.61	4.00	5.02	4.02	5.78	4.46	6.14	4.51	6.25	4.46	6.48	4.61	6.67	4.48
	39	4.61	4.00	5.01	4.02	5.74	4.44	6.11	4.50	6.19	4.43	6.36	4.56	6.54	4.44
	41	4.61	4.00	4.99	4.01	5.57	4.37	5.86	4.39	5.93	4.33	6.07	4.46	6.23	4.34
	43	4.61	4.00	4.97	4.00	5.40	4.30	5.61	4.30	5.67	4.23	5.79	4.37	5.92	4.24

Air flow	Ambient air temp. DB	Ambient air temp. WB	Indoor air temp. 16 ℃CDB	18 ℃CDB	20 ℃CDB	22 ℃CDB	24 ℃CDB
	-19.8	-20	4.02	4.02	4.02	4.02	4.02
	-17.8	-18	4.28	4.28	4.28	4.28	4.28
	-15.7	-16	4.54	4.54	4.54	4.54	4.54
	-13.7	-14	4.80	4.80	4.80	4.80	4.80
	-11.7	-12	5.05	5.05	5.05	5.05	5.05
Me	-9.6	-10	5.31	5.31	5.31	5.31	5.31
	-7.5	-8	5.64	5.64	5.64	5.64	5.64
15	-5.5	-6	5.96	5.96	5.96	5.96	5.96
(m³/min)	-3.4	-4	6.17	6.16	6.15	6.09	6.03
	-1.3	-2	6.38	6.36	6.34	6.22	6.10
	0.8	0	6.72	6.63	6.53	6.30	6.06
	3.9	3	7.29	7.03	6.77	6.39	6.01
	7.0	6	7.97	7.45	6.93	6.44	5.96
	10.1	9	7.92	7.41	6.90	6.41	5.91
	13.2	12	7.87	7.36	6.86	6.36	5.86
	16.9	15.5	7.80	7.30	6.80	6.30	5.80

Air flow	Ambient air temp. (℃DB)	Indoor air temperature 21 ℃DB 14 ℃WB TC	21 ℃DB 14 ℃WB SHC	23 ℃DB 16 ℃WB TC	23 ℃DB 16 ℃WB SHC	26 ℃DB 18 ℃WB TC	26 ℃DB 18 ℃WB SHC	27 ℃DB 19 ℃WB TC	27 ℃DB 19 ℃WB SHC	28 ℃DB 20 ℃WB TC	28 ℃DB 20 ℃WB SHC	31 ℃DB 22 ℃WB TC	31 ℃DB 22 ℃WB SHC	33 ℃DB 24 ℃WB TC	33 ℃DB 24 ℃WB SHC
	10			4.30	3.38	5.14	3.82	5.57	3.91	5.92	3.96	6.63	4.29	6.89	4.18
	12			4.30	3.38	5.14	3.82	5.57	3.91	5.91	3.96	6.61	4.28	6.86	4.16
	14			4.30	3.38	5.14	3.82	5.57	3.91	5.90	3.95	6.58	4.27	6.83	4.15
	16			4.30	3.38	5.14	3.82	5.57	3.91	5.90	3.95	6.56	4.26	6.80	4.14
	18			4.30	3.38	5.14	3.82	5.57	3.91	5.89	3.95	6.54	4.25	6.77	4.13
Lo	20			4.30	3.38	5.14	3.82	5.57	3.91	5.88	3.95	6.51	4.24	6.74	4.12
	22			4.30	3.38	5.14	3.82	5.57	3.91	5.85	3.93	6.43	4.21	6.65	4.08
12	24			4.29	3.38	5.14	3.82	5.57	3.91	5.83	3.93	6.35	4.17	6.55	4.05
(m³/min)	26			4.29	3.38	5.12	3.81	5.51	3.89	5.76	3.90	6.25	4.14	6.45	4.02
	28	3.89	3.33	4.28	3.37	5.09	3.80	5.46	3.87	5.69	3.87	6.15	4.10	6.35	3.98
	30	3.89	3.33	4.27	3.37	5.05	3.78	5.41	3.84	5.62	3.84	6.05	4.06	6.26	3.95
	32	3.89	3.33	4.26	3.36	5.01	3.76	5.36	3.82	5.56	3.82	5.96	4.03	6.16	3.91
	34	3.89	3.33	4.25	3.36	5.00	3.76	5.29	3.80	5.47	3.78	5.83	3.97	6.03	3.87
	35	3.89	3.33	4.24	3.35	4.99	3.75	5.25	3.78	5.42	3.76	5.77	3.95	5.97	3.84
	36	3.89	3.33	4.24	3.35	4.95	3.74	5.22	3.77	5.37	3.74	5.67	3.91	5.86	3.81
	38	3.89	3.33	4.23	3.35	4.87	3.70	5.17	3.75	5.27	3.70	5.46	3.84	5.62	3.73
	39	3.89	3.33	4.22	3.34	4.84	3.69	5.15	3.74	5.22	3.68	5.36	3.80	5.51	3.68
	41	3.89	3.33	4.21	3.34	4.69	3.63	4.94	3.65	5.00	3.59	5.12	3.71	5.25	3.60
	43	3.89	3.33	4.19	3.33	4.55	3.57	4.73	3.57	4.78	3.51	4.88	3.62	4.99	3.52

Air flow	Ambient air temp. DB	Ambient air temp. WB	Indoor air temp. 16 ℃CDB	18 ℃CDB	20 ℃CDB	22 ℃CDB	24 ℃CDB
	-19.8	-20	3.35	3.35	3.35	3.35	3.35
	-17.8	-18	3.56	3.56	3.56	3.56	3.56
	-15.7	-16	3.78	3.78	3.78	3.78	3.78
	-13.7	-14	3.99	3.99	3.99	3.99	3.99
	-11.7	-12	4.21	4.21	4.21	4.21	4.21
Lo	-9.6	-10	4.42	4.42	4.42	4.42	4.42
	-7.5	-8	4.69	4.69	4.69	4.69	4.69
12	-5.5	-6	4.96	4.96	4.96	4.96	4.96
(m³/min)	-3.4	-4	5.14	5.13	5.12	5.07	5.02
	-1.3	-2	5.31	5.29	5.28	5.18	5.08
	0.8	0	5.60	5.52	5.44	5.24	5.05
	3.9	3	6.07	5.86	5.64	5.32	5.01
	7.0	6	6.64	6.20	5.77	5.37	4.96
	10.1	9	6.59	6.17	5.75	5.33	4.92
	13.2	12	6.55	6.13	5.71	5.29	4.88
	16.9	15.5	6.50	6.08	5.66	5.24	4.83

Note(1) This data shows average statuses out of those possible to occur in the system control.
(Depending on controls, there may be ranges where the operation is not conducted continuously.)

(2) Symbols are as follows
TC :Total cooling capacity(kW)
SHC :Sensible heat capacity(kW)

Cool mode	Uhi	Hi	Me	Lo
Air flow	19.00	18	15	12
TC	7.24	7.10	6.23	5.25
SHF	0.76	0.75	0.73	0.72

Heat mode	Uhi	Hi	Me	Lo
Air flow	19	18	15	12
Heating capacity	8.16	8.00	6.93	5.77

Model **FDU71KXE6** Cool Mode

Air flow	Ambient air temp. (°CDB)	Indoor air temperature 21 °CDB 14 °CWB TC	21 °CDB 14 °CWB SHC	23 °CDB 16 °CWB TC	23 °CDB 16 °CWB SHC	26 °CDB 18 °CWB TC	26 °CDB 18 °CWB SHC	27 °CDB 19 °CWB TC	27 °CDB 19 °CWB SHC	28 °CDB 20 °CWB TC	28 °CDB 20 °CWB SHC	31 °CDB 22 °CWB TC	31 °CDB 22 °CWB SHC	33 °CDB 24 °CWB TC	33 °CDB 24 °CWB SHC
Uhi 30 (m³/min)	10			6.42	6.16	7.67	7.24	8.30	7.36	8.83	7.42	9.89	8.01	10.27	7.84
	12			6.42	6.16	7.67	7.24	8.30	7.36	8.82	7.42	9.86	8.00	10.23	7.83
	14			6.42	6.16	7.67	7.24	8.30	7.36	8.81	7.41	9.82	7.99	10.18	7.81
	16			6.42	6.16	7.67	7.24	8.30	7.36	8.79	7.40	9.78	7.97	10.14	7.80
	18			6.42	6.16	7.67	7.24	8.30	7.36	8.78	7.40	9.75	7.96	10.09	7.79
	20			6.42	6.16	7.67	7.24	8.30	7.36	8.77	7.40	9.71	7.95	10.05	7.77
	22			6.41	6.15	7.67	7.24	8.30	7.36	8.73	7.38	9.59	7.91	9.91	7.73
	24			6.40	6.14	7.67	7.24	8.30	7.36	8.69	7.37	9.47	7.87	9.77	7.69
	26			6.39	6.13	7.63	7.22	8.22	7.31	8.59	7.33	9.32	7.82	9.62	7.65
	28	5.79	5.56	6.39	6.13	7.60	7.21	8.14	7.29	8.48	7.30	9.17	7.77	9.47	7.60
	30	5.79	5.56	6.37	6.12	7.54	7.19	8.06	7.26	8.39	7.25	9.03	7.73	9.33	7.56
	32	5.79	5.56	6.36	6.11	7.48	7.17	7.99	7.23	8.29	7.21	8.89	7.68	9.19	7.52
	34	5.79	5.56	6.34	6.09	7.45	7.15	7.88	7.19	8.16	7.17	8.70	7.62	9.00	7.47
	35	5.79	5.56	6.33	6.08	7.44	7.14	7.83	7.20	8.09	7.14	8.61	7.59	8.91	7.44
	36	5.79	5.56	6.32	6.07	7.38	7.08	7.79	7.16	8.01	7.12	8.45	7.54	8.73	7.38
	38	5.79	5.56	6.30	6.05	7.27	6.98	7.71	7.13	7.86	7.06	8.14	7.44	8.39	7.29
	39	5.79	5.56	6.30	6.05	7.21	6.92	7.67	7.12	7.78	7.04	7.99	7.40	8.21	7.23
	41	5.79	5.56	6.27	6.02	7.00	6.72	7.36	7.00	7.45	6.92	7.63	7.28	7.83	7.13
	43	5.79	5.56	6.25	6.00	6.78	6.51	7.05	6.77	7.12	6.79	7.28	6.99	7.44	7.01

Heat Mode

Air flow	Ambient air temp. DB	Ambient air temp. WB	Indoor air temp. 16 °CDB	18 °CDB	20 °CDB	22 °CDB	24 °CDB
Uhi 30 (m³/min)	-19.8	-20	5.26	5.26	5.26	5.26	5.26
	-17.8	-18	5.60	5.60	5.60	5.60	5.60
	-15.7	-16	5.94	5.94	5.94	5.94	5.94
	-13.7	-14	6.28	6.28	6.28	6.28	6.28
	-11.7	-12	6.62	6.62	6.62	6.62	6.62
	-9.6	-10	6.95	6.95	6.95	6.95	6.95
	-7.5	-8	7.38	7.38	7.38	7.38	7.38
	-5.5	-6	7.80	7.80	7.80	7.80	7.80
	-3.4	-4	8.07	8.06	8.05	7.97	7.89
	-1.3	-2	8.34	8.32	8.30	8.14	7.98
	0.8	0	8.80	8.67	8.55	8.24	7.94
	3.9	3	9.55	9.21	8.87	8.37	7.87
	7.0	6	10.43	9.75	9.07	8.44	7.80
	10.1	9	10.36	9.70	9.04	8.38	7.73
	13.2	12	10.29	9.64	8.98	8.32	7.66
	16.9	15.5	10.22	9.56	8.90	8.24	7.58

Air flow	Ambient air temp. (°CDB)	Indoor air temperature 21 °CDB 14 °CWB TC	21 °CDB 14 °CWB SHC	23 °CDB 16 °CWB TC	23 °CDB 16 °CWB SHC	26 °CDB 18 °CWB TC	26 °CDB 18 °CWB SHC	27 °CDB 19 °CWB TC	27 °CDB 19 °CWB SHC	28 °CDB 20 °CWB TC	28 °CDB 20 °CWB SHC	31 °CDB 22 °CWB TC	31 °CDB 22 °CWB SHC	33 °CDB 24 °CWB TC	33 °CDB 24 °CWB SHC
Hi 25 (m³/min)	10			5.82	5.56	6.96	6.29	7.53	6.40	8.01	6.46	8.97	6.98	9.31	6.83
	12			5.82	5.56	6.96	6.29	7.53	6.40	8.00	6.46	8.94	6.97	9.27	6.82
	14			5.82	5.56	6.96	6.29	7.53	6.40	7.99	6.45	8.90	6.96	9.23	6.80
	16			5.82	5.56	6.96	6.29	7.53	6.40	7.97	6.44	8.87	6.95	9.19	6.79
	18			5.82	5.56	6.96	6.29	7.53	6.40	7.96	6.44	8.84	6.94	9.15	6.78
	20			5.82	5.56	6.96	6.29	7.53	6.40	7.95	6.44	8.81	6.93	9.11	6.77
	22			5.81	5.56	6.95	6.29	7.53	6.40	7.92	6.43	8.70	6.89	8.99	6.73
	24			5.80	5.55	6.95	6.29	7.53	6.40	7.88	6.41	8.58	6.85	8.86	6.69
	26			5.80	5.55	6.92	6.28	7.46	6.38	7.79	6.38	8.45	6.81	8.73	6.65
	28	5.25	5.04	5.79	5.55	6.89	6.26	7.38	6.34	7.69	6.35	8.31	6.76	8.59	6.61
	30	5.25	5.04	5.78	5.55	6.83	6.24	7.31	6.31	7.60	6.30	8.19	6.72	8.46	6.57
	32	5.25	5.04	5.77	5.54	6.78	6.22	7.24	6.28	7.51	6.27	8.06	6.68	8.33	6.53
	34	5.25	5.04	5.75	5.52	6.76	6.21	7.15	6.25	7.39	6.23	7.89	6.62	8.16	6.48
	35	5.25	5.04	5.74	5.51	6.75	6.21	7.10	6.25	7.33	6.20	7.80	6.59	8.08	6.46
	36	5.25	5.04	5.73	5.50	6.69	6.19	7.06	6.22	7.26	6.18	7.66	6.55	7.92	6.41
	38	5.25	5.04	5.72	5.49	6.59	6.15	6.99	6.19	7.12	6.13	7.38	6.46	7.61	6.32
	39	5.25	5.04	5.71	5.48	6.54	6.13	6.96	6.18	7.05	6.11	7.24	6.41	7.45	6.27
	41	5.25	5.04	5.69	5.46	6.35	6.06	6.67	6.07	6.76	6.00	6.92	6.31	7.10	6.17
	43	5.25	5.04	5.67	5.44	6.15	5.90	6.39	5.97	6.46	5.89	6.60	6.19	6.75	6.05

Air flow	Ambient air temp. DB	Ambient air temp. WB	Indoor air temp. 16 °CDB	18 °CDB	20 °CDB	22 °CDB	24 °CDB
Hi 25 (m³/min)	-19.8	-20	4.64	4.64	4.64	4.64	4.64
	-17.8	-18	4.94	4.94	4.94	4.94	4.94
	-15.7	-16	5.24	5.24	5.24	5.24	5.24
	-13.7	-14	5.54	5.54	5.54	5.54	5.54
	-11.7	-12	5.83	5.83	5.83	5.83	5.83
	-9.6	-10	6.13	6.13	6.13	6.13	6.13
	-7.5	-8	6.51	6.51	6.51	6.51	6.51
	-5.5	-6	6.88	6.88	6.88	6.88	6.88
	-3.4	-4	7.12	7.11	7.10	7.03	6.96
	-1.3	-2	7.36	7.34	7.32	7.18	7.04
	0.8	0	7.76	7.65	7.54	7.27	7.00
	3.9	3	8.42	8.12	7.82	7.38	6.94
	7.0	6	9.20	8.60	8.00	7.44	6.88
	10.1	9	9.14	8.56	7.97	7.40	6.82
	13.2	12	9.08	8.50	7.92	7.34	6.76
	16.9	15.5	9.01	8.43	7.85	7.27	6.69

Air flow	Ambient air temp. (°CDB)	Indoor air temperature 21 °CDB 14 °CWB TC	21 °CDB 14 °CWB SHC	23 °CDB 16 °CWB TC	23 °CDB 16 °CWB SHC	26 °CDB 18 °CWB TC	26 °CDB 18 °CWB SHC	27 °CDB 19 °CWB TC	27 °CDB 19 °CWB SHC	28 °CDB 20 °CWB TC	28 °CDB 20 °CWB SHC	31 °CDB 22 °CWB TC	31 °CDB 22 °CWB SHC	33 °CDB 24 °CWB TC	33 °CDB 24 °CWB SHC
Me 22.50 (m³/min)	10			5.33	5.11	6.37	5.76	6.89	5.85	7.33	5.91	8.21	6.42	8.53	6.29
	12			5.33	5.11	6.37	5.76	6.89	5.85	7.32	5.90	8.18	6.41	8.49	6.27
	14			5.33	5.11	6.37	5.76	6.89	5.85	7.31	5.90	8.15	6.40	8.45	6.26
	16			5.33	5.11	6.37	5.76	6.89	5.85	7.30	5.89	8.12	6.39	8.42	6.25
	18			5.33	5.11	6.37	5.76	6.89	5.85	7.29	5.89	8.09	6.38	8.38	6.24
	20			5.33	5.11	6.37	5.76	6.89	5.85	7.28	5.89	8.06	6.37	8.34	6.23
	22			5.32	5.11	6.37	5.76	6.89	5.85	7.25	5.88	7.96	6.34	8.23	6.19
	24			5.31	5.10	6.36	5.76	6.89	5.85	7.21	5.86	7.86	6.30	8.11	6.16
	26			5.31	5.10	6.33	5.74	6.83	5.83	7.13	5.83	7.73	6.26	7.99	6.12
	28	4.81	4.62	5.30	5.09	6.31	5.74	6.76	5.80	7.04	5.80	7.61	6.22	7.86	6.08
	30	4.81	4.62	5.29	5.08	6.26	5.72	6.70	5.78	6.96	5.77	7.49	6.18	7.75	6.03
	32	4.81	4.62	5.28	5.07	6.21	5.70	6.63	5.75	6.88	5.74	7.38	6.13	7.63	6.00
	34	4.81	4.62	5.26	5.05	6.19	5.69	6.54	5.72	6.77	5.70	7.22	6.08	7.47	5.95
	35	4.81	4.62	5.25	5.04	6.18	5.69	6.50	5.66	6.71	5.68	7.14	6.05	7.39	5.92
	36	4.81	4.62	5.25	5.04	6.13	5.67	6.47	5.70	6.65	5.66	7.02	6.01	7.25	5.88
	38	4.81	4.62	5.23	5.02	6.04	5.63	6.40	5.67	6.52	5.61	6.76	5.93	6.96	5.79
	39	4.81	4.62	5.23	5.02	5.99	5.61	6.37	5.66	6.46	5.59	6.63	5.88	6.82	5.75
	41	4.81	4.62	5.21	5.00	5.81	5.54	6.11	5.56	6.19	5.50	6.34	5.79	6.50	5.66
	43	4.81	4.62	5.19	4.98	5.63	5.40	5.85	5.47	5.91	5.40	6.04	5.69	6.18	5.56

Air flow	Ambient air temp. DB	Ambient air temp. WB	Indoor air temp. 16 °CDB	18 °CDB	20 °CDB	22 °CDB	24 °CDB
Me 22.50 (m³/min)	-19.8	-20	4.18	4.18	4.18	4.18	4.18
	-17.8	-18	4.44	4.44	4.44	4.44	4.44
	-15.7	-16	4.71	4.71	4.71	4.71	4.71
	-13.7	-14	4.98	4.98	4.98	4.98	4.98
	-11.7	-12	5.25	5.25	5.25	5.25	5.25
	-9.6	-10	5.52	5.52	5.52	5.52	5.52
	-7.5	-8	5.86	5.86	5.86	5.86	5.86
	-5.5	-6	6.19	6.19	6.19	6.19	6.19
	-3.4	-4	6.41	6.40	6.39	6.33	6.26
	-1.3	-2	6.62	6.61	6.59	6.46	6.34
	0.8	0	6.98	6.89	6.79	6.54	6.30
	3.9	3	7.58	7.31	7.04	6.64	6.25
	7.0	6	8.28	7.74	7.20	6.70	6.19
	10.1	9	8.23	7.70	7.17	6.66	6.14
	13.2	12	8.17	7.65	7.13	6.61	6.08
	16.9	15.5	8.11	7.59	7.07	6.54	6.02

Air flow	Ambient air temp. (°CDB)	Indoor air temperature 21 °CDB 14 °CWB TC	21 °CDB 14 °CWB SHC	23 °CDB 16 °CWB TC	23 °CDB 16 °CWB SHC	26 °CDB 18 °CWB TC	26 °CDB 18 °CWB SHC	27 °CDB 19 °CWB TC	27 °CDB 19 °CWB SHC	28 °CDB 20 °CWB TC	28 °CDB 20 °CWB SHC	31 °CDB 22 °CWB TC	31 °CDB 22 °CWB SHC	33 °CDB 24 °CWB TC	33 °CDB 24 °CWB SHC
Lo 20 (m³/min)	10			4.84	4.61	5.78	5.21	6.25	5.30	6.65	5.34	7.45	5.79	7.74	5.67
	12			4.84	4.61	5.78	5.21	6.25	5.30	6.64	5.34	7.43	5.78	7.71	5.66
	14			4.84	4.61	5.78	5.21	6.25	5.30	6.64	5.34	7.40	5.77	7.67	5.65
	16			4.84	4.61	5.78	5.21	6.25	5.30	6.63	5.34	7.37	5.76	7.64	5.64
	18			4.84	4.61	5.78	5.21	6.25	5.30	6.62	5.33	7.35	5.76	7.61	5.63
	20			4.84	4.61	5.78	5.21	6.25	5.30	6.61	5.33	7.32	5.75	7.57	5.61
	22			4.83	4.60	5.78	5.21	6.25	5.30	6.58	5.32	7.23	5.72	7.47	5.58
	24			4.82	4.60	5.78	5.21	6.25	5.30	6.55	5.31	7.13	5.68	7.37	5.55
	26			4.82	4.60	5.75	5.20	6.20	5.28	6.47	5.28	7.02	5.64	7.25	5.51
	28	4.37	4.20	4.81	4.59	5.72	5.19	6.14	5.26	6.39	5.25	6.91	5.61	7.14	5.48
	30	4.37	4.20	4.80	4.59	5.68	5.17	6.08	5.23	6.32	5.23	6.80	5.57	7.03	5.45
	32	4.37	4.20	4.79	4.59	5.63	5.14	6.02	5.21	6.24	5.20	6.70	5.54	6.93	5.42
	34	4.37	4.20	4.78	4.58	5.61	5.14	5.94	5.18	6.14	5.16	6.56	5.49	6.78	5.37
	35	4.37	4.20	4.77	4.58	5.61	5.14	5.90	5.13	6.10	5.14	6.49	5.47	6.71	5.35
	36	4.37	4.20	4.76	4.57	5.56	5.12	5.87	5.15	6.04	5.12	6.37	5.43	6.58	5.31
	38	4.37	4.20	4.75	4.56	5.48	5.08	5.81	5.13	5.92	5.08	6.14	5.35	6.32	5.23
	39	4.37	4.20	4.74	4.55	5.44	5.07	5.78	5.12	5.86	5.06	6.02	5.31	6.19	5.19
	41	4.37	4.20	4.73	4.54	5.27	5.01	5.55	5.02	5.61	4.96	5.75	5.21	5.90	5.09
	43	4.37	4.20	4.71	4.52	5.11	4.91	5.31	4.94	5.37	4.87	5.49	5.13	5.61	5.01

Air flow	Ambient air temp. DB	Ambient air temp. WB	Indoor air temp. 16 °CDB	18 °CDB	20 °CDB	22 °CDB	24 °CDB
Lo 20 (m³/min)	-19.8	-20	3.71	3.71	3.71	3.71	3.71
	-17.8	-18	3.95	3.95	3.95	3.95	3.95
	-15.7	-16	4.19	4.19	4.19	4.19	4.19
	-13.7	-14	4.43	4.43	4.43	4.43	4.43
	-11.7	-12	4.67	4.67	4.67	4.67	4.67
	-9.6	-10	4.91	4.91	4.91	4.91	4.91
	-7.5	-8	5.21	5.21	5.21	5.21	5.21
	-5.5	-6	5.50	5.50	5.50	5.50	5.50
	-3.4	-4	5.70	5.69	5.68	5.62	5.57
	-1.3	-2	5.89	5.87	5.86	5.74	5.63
	0.8	0	6.21	6.12	6.03	5.82	5.60
	3.9	3	6.74	6.50	6.26	5.90	5.55
	7.0	6	7.36	6.88	6.40	5.95	5.50
	10.1	9	7.31	6.84	6.38	5.92	5.46
	13.2	12	7.26	6.80	6.34	5.87	5.41
	16.9	15.5	7.21	6.74	6.28	5.82	5.35

Note(1) This data shows average statuses out of those possible to occur in the system control.
(Depending on controls, there may be ranges where the operation is not conducted continuously.)

(2) Symbols are as follows
TC :Total cooling capacity(kW)
SHC :Sensible heat capacity(kW)

Cool mode	Uhi	Hi	Me	Lo
Air flow	30.00	25	22.50	20
TC	7.83	7.10	6.50	5.90
SHF	0.92	0.88	0.87	0.87

Heat mode	Uhi	Hi	Me	Lo
Air flow	30	25	22.5	20
Heating capacity	9.07	8.00	7.20	6.40

Model **FDU90KXE6** Cool Mode

Air flow	Ambient air temp. (℃DB)	Indoor air temperature 21 ℃CDB 14 ℃CWB TC	SHC	23 ℃CDB 16 ℃CWB TC	SHC	26 ℃CDB 18 ℃CWB TC	SHC	27 ℃CDB 19 ℃CWB TC	SHC	28 ℃CDB 20 ℃CWB TC	SHC	31 ℃CDB 22 ℃CWB TC	SHC	33 ℃CDB 24 ℃CWB TC	SHC
Uhi	10			8.21	7.88	9.82	9.43	10.62	9.65	11.30	9.73	12.66	10.57	13.14	10.36
	12			8.21	7.88	9.82	9.43	10.62	9.65	11.28	9.72	12.61	10.55	13.09	10.34
	14			8.21	7.88	9.82	9.43	10.62	9.65	11.27	9.71	12.57	10.54	13.03	10.33
	16			8.21	7.88	9.82	9.43	10.62	9.65	11.25	9.71	12.52	10.53	12.97	10.31
	18			8.21	7.88	9.82	9.43	10.62	9.65	11.24	9.70	12.47	10.51	12.92	10.30
	20			8.21	7.88	9.82	9.43	10.62	9.65	11.22	9.70	12.43	10.50	12.86	10.28
	22			8.20	7.87	9.81	9.42	10.62	9.65	11.17	9.68	12.27	10.45	12.68	10.22
41	24			8.19	7.86	9.81	9.42	10.62	9.65	11.12	9.66	12.11	10.40	12.51	10.15
(m³/min)	26			8.18	7.85	9.77	9.38	10.52	9.62	10.99	9.62	11.92	10.31	12.32	10.10
	28	7.41	7.11	8.18	7.85	9.72	9.33	10.42	9.58	10.86	9.57	11.73	10.25	12.12	10.04
	30	7.41	7.11	8.16	7.83	9.64	9.25	10.32	9.54	10.73	9.53	11.55	10.19	11.94	9.99
	32	7.41	7.11	8.14	7.81	9.57	9.19	10.22	9.51	10.61	9.49	11.37	10.14	11.76	9.93
	34	7.41	7.11	8.11	7.79	9.54	9.16	10.09	9.46	10.44	9.43	11.13	10.06	11.52	9.86
	35	7.41	7.11	8.10	7.78	9.52	9.14	10.02	9.32	10.35	9.40	11.01	10.03	11.40	9.83
	36	7.41	7.11	8.09	7.77	9.45	9.07	9.97	9.42	10.25	9.36	10.82	9.97	11.18	9.76
	38	7.41	7.11	8.07	7.75	9.30	8.93	9.87	9.32	10.05	9.23	10.42	9.81	10.73	9.61
	39	7.41	7.11	8.06	7.74	9.23	8.86	9.82	9.30	9.95	9.19	10.22	9.75	10.51	9.55
	41	7.41	7.11	8.03	7.71	8.96	8.60	9.42	9.04	9.54	9.06	9.77	9.38	10.02	9.33
	43	7.41	7.11	8.00	7.68	8.68	8.33	9.02	8.66	9.12	8.76	9.32	8.95	9.53	9.15

Heat Mode

Air flow	Ambient air temp. DB	WB	Indoor air temp. 16 ℃CDB	18 ℃CDB	20 ℃CDB	22 ℃CDB	24 ℃CDB
Uhi	-19.8	-20	6.59	6.59	6.59	6.59	6.59
	-17.8	-18	7.01	7.01	7.01	7.01	7.01
	-15.7	-16	7.44	7.44	7.44	7.44	7.44
	-13.7	-14	7.86	7.86	7.86	7.86	7.86
	-11.7	-12	8.29	8.29	8.29	8.29	8.29
	-9.6	-10	8.71	8.71	8.71	8.71	8.71
	-7.5	-8	9.24	9.24	9.24	9.24	9.24
41	-5.5	-6	9.77	9.77	9.77	9.77	9.77
(m³/min)	-3.4	-4	10.11	10.10	10.08	9.98	9.88
	-1.3	-2	10.45	10.42	10.39	10.20	10.00
	0.8	0	11.02	10.86	10.71	10.32	9.94
	3.9	3	11.96	11.53	11.10	10.48	9.85
	7.0	6	13.06	12.21	11.36	10.56	9.77
	10.1	9	12.98	12.15	11.32	10.50	9.68
	13.2	12	12.89	12.07	11.25	10.42	9.60
	16.9	15.5	12.79	11.97	11.15	10.32	9.50

Air flow	Ambient air temp. (℃DB)	Indoor air temperature 21 ℃CDB 14 ℃CWB TC	SHC	23 ℃CDB 16 ℃CWB TC	SHC	26 ℃CDB 18 ℃CWB TC	SHC	27 ℃CDB 19 ℃CWB TC	SHC	28 ℃CDB 20 ℃CWB TC	SHC	31 ℃CDB 22 ℃CWB TC	SHC	33 ℃CDB 24 ℃CWB TC	SHC
Hi	10			7.38	7.08	8.82	8.45	9.54	8.58	10.15	8.67	11.37	9.41	11.80	9.21
	12			7.38	7.08	8.82	8.45	9.54	8.58	10.14	8.66	11.33	9.39	11.75	9.20
	14			7.38	7.08	8.82	8.45	9.54	8.58	10.12	8.66	11.29	9.38	11.70	9.18
	16			7.38	7.08	8.82	8.45	9.54	8.58	10.11	8.65	11.25	9.36	11.65	9.17
	18			7.38	7.08	8.82	8.45	9.54	8.58	10.09	8.65	11.20	9.35	11.60	9.15
	20			7.38	7.08	8.82	8.45	9.54	8.58	10.08	8.64	11.16	9.33	11.55	9.14
	22			7.37	7.08	8.82	8.45	9.54	8.58	10.03	8.62	11.02	9.29	11.39	9.09
34	24			7.36	7.07	8.81	8.45	9.54	8.58	9.99	8.61	10.88	9.24	11.24	9.04
(m³/min)	26			7.35	7.06	8.77	8.42	9.45	8.55	9.87	8.57	10.71	9.19	11.06	8.98
	28	6.66	6.39	7.34	7.05	8.73	8.38	9.36	8.51	9.75	8.51	10.54	9.13	10.89	8.94
	30	6.66	6.39	7.33	7.04	8.66	8.31	9.27	8.48	9.64	8.47	10.38	9.08	10.73	8.89
	32	6.66	6.39	7.31	7.02	8.60	8.26	9.18	8.45	9.53	8.43	10.22	9.03	10.56	8.83
	34	6.66	6.39	7.28	6.99	8.57	8.23	9.06	8.40	9.37	8.37	10.00	8.93	10.35	8.75
	35	6.66	6.39	7.27	6.98	8.55	8.21	9.00	8.37	9.30	8.35	9.89	8.89	10.24	8.72
	36	6.66	6.39	7.26	6.97	8.49	8.15	8.96	8.37	9.21	8.31	9.72	8.84	10.04	8.66
	38	6.66	6.39	7.25	6.96	8.36	8.03	8.87	8.33	9.03	8.25	9.36	8.73	9.64	8.54
	39	6.66	6.39	7.24	6.95	8.29	7.96	8.82	8.31	8.94	8.22	9.18	8.67	9.44	8.48
	41	6.66	6.39	7.21	6.92	8.04	7.72	8.46	8.12	8.56	8.09	8.77	8.42	9.00	8.35
	43	6.66	6.39	7.19	6.90	7.80	7.49	8.10	7.78	8.19	7.86	8.37	8.04	8.56	8.22

Air flow	Ambient air temp. DB	WB	Indoor air temp. 16 ℃CDB	18 ℃CDB	20 ℃CDB	22 ℃CDB	24 ℃CDB
Hi	-19.8	-20	5.80	5.80	5.80	5.80	5.80
	-17.8	-18	6.17	6.17	6.17	6.17	6.17
	-15.7	-16	6.55	6.55	6.55	6.55	6.55
	-13.7	-14	6.92	6.92	6.92	6.92	6.92
	-11.7	-12	7.29	7.29	7.29	7.29	7.29
	-9.6	-10	7.67	7.67	7.67	7.67	7.67
	-7.5	-8	8.13	8.13	8.13	8.13	8.13
34	-5.5	-6	8.60	8.60	8.60	8.60	8.60
(m³/min)	-3.4	-4	8.90	8.89	8.88	8.79	8.70
	-1.3	-2	9.20	9.18	9.15	8.98	8.80
	0.8	0	9.70	9.56	9.43	9.09	8.75
	3.9	3	10.53	10.15	9.78	9.23	8.68
	7.0	6	11.50	10.75	10.00	9.30	8.60
	10.1	9	11.43	10.69	9.96	9.24	8.53
	13.2	12	11.35	10.63	9.90	9.18	8.45
	16.9	15.5	11.26	10.54	9.81	9.09	8.36

Air flow	Ambient air temp. (℃DB)	Indoor air temperature 21 ℃CDB 14 ℃CWB TC	SHC	23 ℃CDB 16 ℃CWB TC	SHC	26 ℃CDB 18 ℃CWB TC	SHC	27 ℃CDB 19 ℃CWB TC	SHC	28 ℃CDB 20 ℃CWB TC	SHC	31 ℃CDB 22 ℃CWB TC	SHC	33 ℃CDB 24 ℃CWB TC	SHC
Me	10			6.82	6.55	8.15	7.73	8.82	7.85	9.38	7.91	10.51	8.59	10.91	8.41
	12			6.82	6.55	8.15	7.73	8.82	7.85	9.37	7.91	10.47	8.57	10.87	8.40
	14			6.82	6.55	8.15	7.73	8.82	7.85	9.36	7.90	10.43	8.56	10.82	8.38
	16			6.82	6.55	8.15	7.73	8.82	7.85	9.34	7.90	10.40	8.55	10.77	8.36
	18			6.82	6.55	8.15	7.73	8.82	7.85	9.33	7.89	10.36	8.54	10.72	8.35
	20			6.82	6.55	8.15	7.73	8.82	7.85	9.32	7.89	10.32	8.52	10.68	8.34
	22			6.81	6.54	8.15	7.73	8.82	7.85	9.28	7.88	10.19	8.48	10.53	8.29
30.50	24			6.80	6.53	8.15	7.73	8.82	7.85	9.23	7.86	10.06	8.44	10.39	8.25
(m³/min)	26			6.79	6.52	8.11	7.71	8.74	7.82	9.12	7.82	9.90	8.38	10.23	8.20
	28	6.16	5.91	6.79	6.52	8.07	7.70	8.65	7.78	9.02	7.78	9.74	8.33	10.07	8.15
	30	6.16	5.91	6.77	6.50	8.01	7.68	8.57	7.76	8.91	7.74	9.59	8.28	9.92	8.10
	32	6.16	5.91	6.76	6.49	7.95	7.63	8.49	7.72	8.81	7.71	9.44	8.23	9.77	8.06
	34	6.16	5.91	6.73	6.46	7.92	7.60	8.38	7.69	8.67	7.66	9.25	8.17	9.56	7.99
	35	6.16	5.91	6.72	6.45	7.90	7.58	8.32	7.65	8.60	7.63	9.15	8.13	9.46	7.97
	36	6.16	5.91	6.71	6.44	7.84	7.53	8.28	7.65	8.51	7.60	8.98	8.08	9.28	7.91
	38	6.16	5.91	6.70	6.43	7.73	7.42	8.20	7.62	8.35	7.54	8.65	7.97	8.91	7.80
	39	6.16	5.91	6.69	6.42	7.67	7.36	8.15	7.60	8.27	7.51	8.49	7.91	8.73	7.75
	41	6.16	5.91	6.67	6.40	7.44	7.14	7.82	7.48	7.92	7.39	8.11	7.79	8.32	7.62
	43	6.16	5.91	6.64	6.37	7.21	6.92	7.49	7.19	7.57	7.27	7.73	7.42	7.91	7.50

Air flow	Ambient air temp. DB	WB	Indoor air temp. 16 ℃CDB	18 ℃CDB	20 ℃CDB	22 ℃CDB	24 ℃CDB
Me	-19.8	-20	5.30	5.30	5.30	5.30	5.30
	-17.8	-18	5.64	5.64	5.64	5.64	5.64
	-15.7	-16	5.98	5.98	5.98	5.98	5.98
	-13.7	-14	6.32	6.32	6.32	6.32	6.32
	-11.7	-12	6.67	6.67	6.67	6.67	6.67
	-9.6	-10	7.01	7.01	7.01	7.01	7.01
	-7.5	-8	7.43	7.43	7.43	7.43	7.43
30.50	-5.5	-6	7.86	7.86	7.86	7.86	7.86
(m³/min)	-3.4	-4	8.13	8.12	8.11	8.03	7.95
	-1.3	-2	8.41	8.39	8.36	8.20	8.04
	0.8	0	8.87	8.74	8.61	8.31	8.00
	3.9	3	9.62	9.28	8.93	8.43	7.93
	7.0	6	10.51	9.83	9.14	8.50	7.86
	10.1	9	10.44	9.77	9.11	8.45	7.79
	13.2	12	10.37	9.71	9.05	8.39	7.72
	16.9	15.5	10.29	9.63	8.97	8.31	7.64

Air flow	Ambient air temp. (℃DB)	Indoor air temperature 21 ℃CDB 14 ℃CWB TC	SHC	23 ℃CDB 16 ℃CWB TC	SHC	26 ℃CDB 18 ℃CWB TC	SHC	27 ℃CDB 19 ℃CWB TC	SHC	28 ℃CDB 20 ℃CWB TC	SHC	31 ℃CDB 22 ℃CWB TC	SHC	33 ℃CDB 24 ℃CWB TC	SHC
Lo	10			6.25	6.00	7.48	6.94	8.09	7.05	8.60	7.11	9.64	7.72	10.01	7.55
	12			6.25	6.00	7.48	6.94	8.09	7.05	8.59	7.11	9.60	7.70	9.96	7.54
	14			6.25	6.00	7.48	6.94	8.09	7.05	8.58	7.11	9.57	7.69	9.92	7.52
	16			6.25	6.00	7.48	6.94	8.09	7.05	8.57	7.10	9.53	7.68	9.88	7.51
	18			6.25	6.00	7.48	6.94	8.09	7.05	8.56	7.10	9.50	7.67	9.84	7.50
	20			6.25	6.00	7.48	6.94	8.09	7.05	8.55	7.09	9.46	7.65	9.79	7.48
	22			6.25	6.00	7.47	6.94	8.09	7.05	8.51	7.08	9.34	7.61	9.66	7.44
27	24			6.24	5.99	7.47	6.94	8.09	7.05	8.47	7.07	9.23	7.58	9.53	7.40
(m³/min)	26			6.23	5.98	7.44	6.93	8.01	7.02	8.37	7.03	9.08	7.53	9.38	7.36
	28	5.65	5.42	6.23	5.98	7.40	6.91	7.94	7.00	8.27	6.99	8.93	7.47	9.23	7.31
	30	5.65	5.42	6.21	5.96	7.34	6.89	7.86	6.97	8.17	6.96	8.80	7.43	9.09	7.27
	32	5.65	5.42	6.20	5.95	7.29	6.87	7.78	6.94	8.08	6.92	8.66	7.38	8.96	7.23
	34	5.65	5.42	6.18	5.93	7.26	6.86	7.68	6.90	7.95	6.88	8.48	7.33	8.77	7.17
	35	5.65	5.42	6.17	5.92	7.25	6.86	7.63	6.87	7.88	6.85	8.39	7.29	8.68	7.14
	36	5.65	5.42	6.16	5.91	7.19	6.83	7.59	6.87	7.81	6.83	8.24	7.24	8.51	7.09
	38	5.65	5.42	6.14	5.89	7.08	6.79	7.52	6.84	7.66	6.77	7.94	7.15	8.17	6.99
	39	5.65	5.42	6.13	5.88	7.03	6.75	7.48	6.82	7.58	6.74	7.78	7.09	8.00	6.94
	41	5.65	5.42	6.11	5.87	6.82	6.55	7.17	6.71	7.26	6.63	7.44	6.98	7.63	6.83
	43	5.65	5.42	6.09	5.85	6.61	6.35	6.87	6.60	6.94	6.52	7.09	6.81	7.25	6.71

Air flow	Ambient air temp. DB	WB	Indoor air temp. 16 ℃CDB	18 ℃CDB	20 ℃CDB	22 ℃CDB	24 ℃CDB
Lo	-19.8	-20	4.80	4.80	4.80	4.80	4.80
	-17.8	-18	5.11	5.11	5.11	5.11	5.11
	-15.7	-16	5.42	5.42	5.42	5.42	5.42
	-13.7	-14	5.73	5.73	5.73	5.73	5.73
	-11.7	-12	6.04	6.04	6.04	6.04	6.04
	-9.6	-10	6.35	6.35	6.35	6.35	6.35
	-7.5	-8	6.73	6.73	6.73	6.73	6.73
27	-5.5	-6	7.12	7.12	7.12	7.12	7.12
(m³/min)	-3.4	-4	7.37	7.36	7.35	7.28	7.20
	-1.3	-2	7.62	7.60	7.58	7.43	7.29
	0.8	0	8.03	7.92	7.80	7.52	7.25
	3.9	3	8.71	8.40	8.09	7.64	7.18
	7.0	6	9.52	8.90	8.28	7.70	7.12
	10.1	9	9.46	8.85	8.25	7.65	7.06
	13.2	12	9.40	8.80	8.20	7.60	7.00
	16.9	15.5	9.33	8.73	8.12	7.52	6.92

Note(1) This data shows average statuses out of those possible to occur in the system control.
(Depending on controls, there may be ranges where the operation is not conducted continuously.)
(2) Symbols are as follows
TC :Total cooling capacity(kW)
SHC :Sensible heat capacity(kW)

Cool mode	Uhi	Hi	Me	Lo
Air flow	41.00	34	30.50	27
TC	10.02	9.00	8.32	7.63
SHF	0.93	0.93	0.92	0.90

Heat mode	Uhi	Hi	Me	Lo
Air flow	41	34	30.5	27
Heating capacity	11.36	10.00	9.14	8.28

Model **FDU112KXE6** Cool Mode

Air flow	Ambient air temp. (°CDB)	Indoor air temperature 21 °CDB 14 °CWB TC	21 °CDB 14 °CWB SHC	23 °CDB 16 °CWB TC	23 °CDB 16 °CWB SHC	26 °CDB 18 °CWB TC	26 °CDB 18 °CWB SHC	27 °CDB 19 °CWB TC	27 °CDB 19 °CWB SHC	28 °CDB 20 °CWB TC	28 °CDB 20 °CWB SHC	31 °CDB 22 °CWB TC	31 °CDB 22 °CWB SHC	33 °CDB 24 °CWB TC	33 °CDB 24 °CWB SHC
	10			10.39	9.64	12.43	10.91	13.44	11.10	14.30	11.20	16.02	12.15	16.63	11.88
	12			10.39	9.64	12.43	10.91	13.44	11.10	14.28	11.20	15.96	12.13	16.56	11.86
	14			10.39	9.64	12.43	10.91	13.44	11.10	14.26	11.19	15.90	12.11	16.49	11.84
	16			10.39	9.64	12.43	10.91	13.44	11.10	14.24	11.18	15.84	12.09	16.42	11.82
	18			10.39	9.64	12.43	10.91	13.44	11.10	14.22	11.17	15.79	12.07	16.34	11.79
Uhi	20			10.39	9.64	12.43	10.91	13.44	11.10	14.20	11.17	15.73	12.05	16.27	11.77
	22			10.38	9.63	12.42	10.91	13.44	11.10	14.14	11.14	15.53	11.98	16.05	11.67
41	24			10.36	9.63	12.42	10.91	13.44	11.10	14.07	11.12	15.33	11.89	15.83	11.61
(m³/min)	26			10.36	9.63	12.36	10.88	13.31	11.05	13.91	11.06	15.09	11.81	15.59	11.53
	28	9.38	9.00	10.35	9.62	12.30	10.86	13.19	11.00	13.74	11.00	14.85	11.72	15.34	11.45
	30	9.38	9.00	10.32	9.61	12.20	10.82	13.06	10.95	13.58	10.94	14.62	11.65	15.11	11.38
	32	9.38	9.00	10.30	9.60	12.11	10.79	12.93	10.90	13.42	10.88	14.39	11.57	14.88	11.31
	34	9.38	9.00	10.26	9.58	12.07	10.77	12.76	10.84	13.21	10.80	14.09	11.47	14.58	11.22
	35	9.38	9.00	10.25	9.58	12.05	10.76	12.68	10.78	13.10	10.76	13.94	11.42	14.42	11.17
	36	9.38	9.00	10.23	9.57	11.96	10.73	12.62	10.79	12.97	10.71	13.69	11.34	14.14	11.08
	38	9.38	9.00	10.21	9.56	11.77	10.65	12.49	10.74	12.72	10.62	13.19	11.17	13.58	10.91
	39	9.38	9.00	10.19	9.55	11.68	10.62	12.43	10.71	12.60	10.58	12.94	11.09	13.30	10.83
	41	9.38	9.00	10.16	9.54	11.33	10.46	11.92	10.52	12.07	10.39	12.36	10.89	12.68	10.64
	43	9.38	9.00	10.12	9.53	10.98	10.33	11.41	10.31	11.54	10.18	11.79	10.68	12.06	10.43

Heat Mode

Air flow	Ambient air temp. DB	Ambient air temp. WB	Indoor air temp. 16 °CDB	18 °CDB	20 °CDB	22 °CDB	24 °CDB
	-19.8	-20	8.39	8.39	8.39	8.39	8.39
	-17.8	-18	8.93	8.93	8.93	8.93	8.93
	-15.7	-16	9.47	9.47	9.47	9.47	9.47
	-13.7	-14	10.01	10.01	10.01	10.01	10.01
	-11.7	-12	10.55	10.55	10.55	10.55	10.55
Uhi	-9.6	-10	11.09	11.09	11.09	11.09	11.09
	-7.5	-8	11.77	11.77	11.77	11.77	11.77
41	-5.5	-6	12.44	12.44	12.44	12.44	12.44
(m³/min)	-3.4	-4	12.88	12.86	12.84	12.72	12.59
	-1.3	-2	13.31	13.28	13.24	12.99	12.73
	0.8	0	14.04	13.84	13.64	13.15	12.66
	3.9	3	15.23	14.69	14.14	13.35	12.55
	7.0	6	16.64	15.56	14.47	13.46	12.44
	10.1	9	16.53	15.47	14.42	13.38	12.34
	13.2	12	16.42	15.37	14.33	13.28	12.23
	16.9	15.5	16.30	15.25	14.20	13.15	12.10

Air flow	Ambient air temp. (°CDB)	Indoor air temperature 21 °CDB 14 °CWB TC	21 °CDB 14 °CWB SHC	23 °CDB 16 °CWB TC	23 °CDB 16 °CWB SHC	26 °CDB 18 °CWB TC	26 °CDB 18 °CWB SHC	27 °CDB 19 °CWB TC	27 °CDB 19 °CWB SHC	28 °CDB 20 °CWB TC	28 °CDB 20 °CWB SHC	31 °CDB 22 °CWB TC	31 °CDB 22 °CWB SHC	33 °CDB 24 °CWB TC	33 °CDB 24 °CWB SHC
	10			9.18	8.23	10.97	9.31	11.87	9.48	12.63	9.60	14.15	10.38	14.69	10.14
	12			9.18	8.23	10.97	9.31	11.87	9.48	12.61	9.59	14.10	10.36	14.63	10.12
	14			9.18	8.23	10.97	9.31	11.87	9.48	12.60	9.59	14.05	10.34	14.56	10.10
	16			9.18	8.23	10.97	9.31	11.87	9.48	12.58	9.58	14.00	10.33	14.50	10.08
	18			9.18	8.23	10.97	9.31	11.87	9.48	12.56	9.57	13.94	10.31	14.44	10.06
Hi	20			9.18	8.23	10.97	9.31	11.87	9.48	12.55	9.57	13.89	10.29	14.37	10.04
	22			9.17	8.22	10.97	9.31	11.87	9.48	12.49	9.54	13.72	10.23	14.18	9.98
34	24			9.15	8.22	10.97	9.31	11.87	9.48	12.43	9.52	13.54	10.17	13.98	9.91
(m³/min)	26			9.15	8.22	10.92	9.29	11.76	9.44	12.28	9.45	13.33	10.09	13.77	9.85
	28	8.29	7.96	9.14	8.21	10.86	9.27	11.65	9.40	12.14	9.40	13.11	10.02	13.55	9.78
	30	8.29	7.96	9.12	8.20	10.78	9.24	11.54	9.36	12.00	9.34	12.91	9.95	13.35	9.69
	32	8.29	7.96	9.09	8.19	10.70	9.20	11.42	9.31	11.85	9.29	12.71	9.86	13.15	9.63
	34	8.29	7.96	9.06	8.18	10.66	9.19	11.27	9.25	11.66	9.22	12.45	9.77	12.87	9.54
	35	8.29	7.96	9.05	8.17	10.64	9.18	11.20	9.18	11.57	9.18	12.31	9.72	12.74	9.50
	36	8.29	7.96	9.04	8.17	10.56	9.15	11.14	9.20	11.46	9.14	12.09	9.65	12.49	9.43
	38	8.29	7.96	9.02	8.16	10.40	9.09	11.03	9.16	11.24	9.06	11.65	9.50	12.00	9.27
	39	8.29	7.96	9.00	8.15	10.32	9.05	10.98	9.14	11.13	9.02	11.43	9.42	11.75	9.20
	41	8.29	7.96	8.97	8.14	10.01	8.93	10.53	8.97	10.66	8.85	10.92	9.25	11.20	9.03
	43	8.29	7.96	8.94	8.13	9.70	8.81	10.08	8.80	10.19	8.68	10.41	9.09	10.65	8.86

Air flow	Ambient air temp. DB	Ambient air temp. WB	Indoor air temp. 16 °CDB	18 °CDB	20 °CDB	22 °CDB	24 °CDB
	-19.8	-20	7.25	7.25	7.25	7.25	7.25
	-17.8	-18	7.72	7.72	7.72	7.72	7.72
	-15.7	-16	8.18	8.18	8.18	8.18	8.18
	-13.7	-14	8.65	8.65	8.65	8.65	8.65
	-11.7	-12	9.12	9.12	9.12	9.12	9.12
Hi	-9.6	-10	9.58	9.58	9.58	9.58	9.58
	-7.5	-8	10.17	10.17	10.17	10.17	10.17
34	-5.5	-6	10.75	10.75	10.75	10.75	10.75
(m³/min)	-3.4	-4	11.13	11.11	11.09	10.98	10.88
	-1.3	-2	11.50	11.47	11.44	11.22	11.00
	0.8	0	12.13	11.95	11.78	11.36	10.94
	3.9	3	13.16	12.69	12.22	11.53	10.84
	7.0	6	14.38	13.44	12.50	11.63	10.75
	10.1	9	14.28	13.37	12.45	11.55	10.66
	13.2	12	14.19	13.28	12.38	11.47	10.56
	16.9	15.5	14.08	13.17	12.27	11.36	10.45

Air flow	Ambient air temp. (°CDB)	Indoor air temperature 21 °CDB 14 °CWB TC	21 °CDB 14 °CWB SHC	23 °CDB 16 °CWB TC	23 °CDB 16 °CWB SHC	26 °CDB 18 °CWB TC	26 °CDB 18 °CWB SHC	27 °CDB 19 °CWB TC	27 °CDB 19 °CWB SHC	28 °CDB 20 °CWB TC	28 °CDB 20 °CWB SHC	31 °CDB 22 °CWB TC	31 °CDB 22 °CWB SHC	33 °CDB 24 °CWB TC	33 °CDB 24 °CWB SHC
	10			8.48	7.48	10.14	8.47	10.97	8.65	11.67	8.74	13.07	9.44	13.58	9.23
	12			8.48	7.48	10.14	8.47	10.97	8.65	11.66	8.73	13.03	9.43	13.52	9.21
	14			8.48	7.48	10.14	8.47	10.97	8.65	11.64	8.73	12.98	9.41	13.46	9.19
	16			8.48	7.48	10.14	8.47	10.97	8.65	11.62	8.72	12.93	9.40	13.40	9.17
	18			8.48	7.48	10.14	8.47	10.97	8.65	11.61	8.72	12.89	9.38	13.34	9.15
Me	20			8.48	7.48	10.14	8.47	10.97	8.65	11.59	8.71	12.84	9.36	13.28	9.13
	22			8.47	7.48	10.14	8.47	10.97	8.65	11.54	8.69	12.68	9.31	13.10	9.07
30.50	24			8.46	7.48	10.13	8.47	10.97	8.65	11.49	8.67	12.51	9.25	12.92	9.02
(m³/min)	26			8.45	7.47	10.09	8.45	10.87	8.59	11.35	8.62	12.32	9.18	12.72	8.95
	28	7.66	7.35	8.45	7.47	10.04	8.43	10.76	8.55	11.22	8.57	12.12	9.11	12.52	8.89
	30	7.66	7.35	8.42	7.46	9.96	8.40	10.66	8.51	11.09	8.50	11.93	9.04	12.34	8.83
	32	7.66	7.35	8.40	7.45	9.88	8.37	10.56	8.47	10.95	8.45	11.75	8.98	12.15	8.77
	34	7.66	7.35	8.38	7.44	9.85	8.36	10.42	8.42	10.78	8.39	11.50	8.88	11.90	8.67
	35	7.66	7.35	8.36	7.43	9.83	8.35	10.35	8.38	10.69	8.35	11.38	8.84	11.77	8.63
	36	7.66	7.35	8.35	7.43	9.76	8.32	10.30	8.37	10.59	8.32	11.17	8.76	11.54	8.56
	38	7.66	7.35	8.33	7.42	9.61	8.26	10.19	8.33	10.38	8.24	10.76	8.63	11.09	8.42
	39	7.66	7.35	8.32	7.42	9.54	8.23	10.14	8.31	10.28	8.20	10.56	8.56	10.86	8.35
	41	7.66	7.35	8.29	7.40	9.25	8.12	9.73	8.15	9.85	8.05	10.09	8.40	10.35	8.19
	43	7.66	7.35	8.26	7.39	8.96	8.00	9.32	8.00	9.42	7.89	9.62	8.24	9.84	8.04

Air flow	Ambient air temp. DB	Ambient air temp. WB	Indoor air temp. 16 °CDB	18 °CDB	20 °CDB	22 °CDB	24 °CDB
	-19.8	-20	6.62	6.62	6.62	6.62	6.62
	-17.8	-18	7.05	7.05	7.05	7.05	7.05
	-15.7	-16	7.48	7.48	7.48	7.48	7.48
	-13.7	-14	7.90	7.90	7.90	7.90	7.90
	-11.7	-12	8.33	8.33	8.33	8.33	8.33
Me	-9.6	-10	8.76	8.76	8.76	8.76	8.76
	-7.5	-8	9.29	9.29	9.29	9.29	9.29
30.50	-5.5	-6	9.82	9.82	9.82	9.82	9.82
(m³/min)	-3.4	-4	10.16	10.15	10.14	10.04	9.94
	-1.3	-2	10.51	10.48	10.45	10.25	10.05
	0.8	0	11.08	10.92	10.76	10.38	9.99
	3.9	3	12.02	11.59	11.16	10.53	9.91
	7.0	6	13.13	12.28	11.42	10.62	9.82
	10.1	9	13.05	12.21	11.38	10.56	9.74
	13.2	12	12.96	12.13	11.31	10.48	9.65
	16.9	15.5	12.86	12.03	11.21	10.38	9.55

Air flow	Ambient air temp. (°CDB)	Indoor air temperature 21 °CDB 14 °CWB TC	21 °CDB 14 °CWB SHC	23 °CDB 16 °CWB TC	23 °CDB 16 °CWB SHC	26 °CDB 18 °CWB TC	26 °CDB 18 °CWB SHC	27 °CDB 19 °CWB TC	27 °CDB 19 °CWB SHC	28 °CDB 20 °CWB TC	28 °CDB 20 °CWB SHC	31 °CDB 22 °CWB TC	31 °CDB 22 °CWB SHC	33 °CDB 24 °CWB TC	33 °CDB 24 °CWB SHC
	10			7.79	6.80	9.31	7.69	10.07	7.83	10.71	7.92	12.00	8.56	12.46	8.36
	12			7.79	6.80	9.31	7.69	10.07	7.83	10.70	7.92	11.96	8.54	12.41	8.34
	14			7.79	6.80	9.31	7.69	10.07	7.83	10.68	7.91	11.91	8.53	12.35	8.32
	16			7.79	6.80	9.31	7.69	10.07	7.83	10.67	7.90	11.87	8.51	12.30	8.30
	18			7.79	6.80	9.31	7.69	10.07	7.83	10.66	7.90	11.83	8.50	12.25	8.29
Lo	20			7.79	6.80	9.31	7.69	10.07	7.83	10.64	7.89	11.78	8.48	12.19	8.27
	22			7.78	6.80	9.31	7.69	10.07	7.83	10.59	7.87	11.63	8.43	12.03	8.21
27	24			7.77	6.79	9.30	7.68	10.07	7.83	10.54	7.85	11.49	8.38	11.86	8.16
(m³/min)	26			7.76	6.79	9.26	7.65	9.98	7.80	10.42	7.81	11.30	8.31	11.68	8.10
	28	7.03	6.72	7.75	6.78	9.22	7.64	9.88	7.76	10.29	7.76	11.12	8.24	11.49	8.04
	30	7.03	6.72	7.73	6.78	9.14	7.60	9.79	7.72	10.17	7.71	10.95	8.19	11.32	7.99
	32	7.03	6.72	7.71	6.77	9.07	7.57	9.69	7.68	10.05	7.67	10.78	8.12	11.15	7.93
	34	7.03	6.72	7.69	6.76	9.04	7.56	9.56	7.63	9.89	7.60	10.56	8.05	10.92	7.86
	35	7.03	6.72	7.68	6.75	9.03	7.56	9.50	7.60	9.81	7.58	10.44	8.01	10.81	7.82
	36	7.03	6.72	7.67	6.75	8.96	7.53	9.45	7.59	9.72	7.54	10.26	7.94	10.60	7.75
	38	7.03	6.72	7.65	6.74	8.82	7.47	9.36	7.54	9.53	7.47	9.88	7.81	10.18	7.62
	39	7.03	6.72	7.64	6.74	8.75	7.45	9.31	7.52	9.44	7.42	9.69	7.73	9.97	7.54
	41	7.03	6.72	7.61	6.72	8.49	7.34	8.93	7.37	9.04	7.27	9.26	7.59	9.50	7.39
	43	7.03	6.72	7.58	6.71	8.23	7.24	8.55	7.23	8.64	7.13	8.83	7.44	9.03	7.25

Air flow	Ambient air temp. DB	Ambient air temp. WB	Indoor air temp. 16 °CDB	18 °CDB	20 °CDB	22 °CDB	24 °CDB
	-19.8	-20	6.00	6.00	6.00	6.00	6.00
	-17.8	-18	6.38	6.38	6.38	6.38	6.38
	-15.7	-16	6.77	6.77	6.77	6.77	6.77
	-13.7	-14	7.16	7.16	7.16	7.16	7.16
	-11.7	-12	7.54	7.54	7.54	7.54	7.54
Lo	-9.6	-10	7.93	7.93	7.93	7.93	7.93
	-7.5	-8	8.41	8.41	8.41	8.41	8.41
27	-5.5	-6	8.89	8.89	8.89	8.89	8.89
(m³/min)	-3.4	-4	9.20	9.19	9.18	9.09	9.00
	-1.3	-2	9.51	9.49	9.46	9.28	9.10
	0.8	0	10.03	9.89	9.75	9.40	9.05
	3.9	3	10.88	10.50	10.11	9.54	8.97
	7.0	6	11.89	11.12	10.34	9.62	8.89
	10.1	9	11.81	11.06	10.30	9.56	8.81
	13.2	12	11.74	10.99	10.24	9.49	8.74
	16.9	15.5	11.65	10.90	10.15	9.40	8.65

Note(1) This data shows average statuses out of those possible to occur in the system control.
(Depending on controls, there may be ranges where the operation is not conducted continuously.)

(2) Symbols are as follows
TC :Total cooling capacity(kW)
SHC :Sensible heat capacity(kW)

Cool mode	Uhi	Hi	Me	Lo
Air flow	41.00	34	30.50	27
TC	12.68	11.20	10.35	9.50
SHF	0.85	0.82	0.81	0.80

Heat mode	Uhi	Hi	Me	Lo
Air flow	41	34	30.5	27
Heating capacity	14.47	12.50	11.42	10.34

Model **FDU140KXE6** Cool Mode

Air flow	Ambient air temp. (℃DB)	Indoor air temperature 21 ℃CDB 14 ℃CWB TC	21 ℃CDB 14 ℃CWB SHC	23 ℃CDB 16 ℃CWB TC	23 ℃CDB 16 ℃CWB SHC	26 ℃CDB 18 ℃CWB TC	26 ℃CDB 18 ℃CWB SHC	27 ℃CDB 19 ℃CWB TC	27 ℃CDB 19 ℃CWB SHC	28 ℃CDB 20 ℃WB TC	28 ℃CDB 20 ℃WB SHC	31 ℃CDB 22 ℃WB TC	31 ℃CDB 22 ℃WB SHC	33 ℃CDB 24 ℃WB TC	33 ℃CDB 24 ℃WB SHC
	10			12.75	11.68	15.24	13.18	16.48	13.43	17.54	13.57	19.64	14.67	20.40	14.34
	12			12.75	11.68	15.24	13.18	16.48	13.43	17.51	13.55	19.57	14.65	20.31	14.32
	14			12.75	11.68	15.24	13.18	16.48	13.43	17.49	13.55	19.50	14.62	20.22	14.29
	16			12.75	11.68	15.24	13.18	16.48	13.43	17.47	13.54	19.43	14.60	20.13	14.26
	18			12.75	11.68	15.24	13.18	16.48	13.43	17.44	13.53	19.36	14.57	20.04	14.23
Uhi	20			12.75	11.68	15.24	13.18	16.48	13.43	17.42	13.52	19.29	14.55	19.96	14.21
	22			12.73	11.67	15.23	13.18	16.48	13.43	17.34	13.49	19.04	14.47	19.68	14.12
50	24			12.71	11.66	15.23	13.18	16.48	13.43	17.26	13.46	18.80	14.38	19.41	14.03
(m³/min)	26			12.70	11.66	15.15	13.15	16.33	13.38	17.05	13.38	18.50	14.28	19.11	13.94
	28	11.51	11.05	12.69	11.65	15.08	13.12	16.17	13.29	16.85	13.31	18.21	14.18	18.82	13.85
	30	11.51	11.05	12.66	11.64	14.97	13.08	16.02	13.24	16.65	13.24	17.93	14.09	18.53	13.77
	32	11.51	11.05	12.63	11.63	14.85	13.03	15.86	13.17	16.46	13.15	17.65	14.00	18.25	13.68
	34	11.51	11.05	12.59	11.61	14.80	13.01	15.65	13.09	16.20	13.05	17.28	13.84	17.88	13.54
	35	11.51	11.05	12.56	11.60	14.77	13.00	15.55	13.06	16.06	13.00	17.09	13.78	17.69	13.48
	36	11.51	11.05	12.55	11.59	14.66	12.96	15.47	13.03	15.91	12.95	16.79	13.68	17.34	13.37
	38	11.51	11.05	12.52	11.58	14.44	12.87	15.32	12.97	15.60	12.83	16.17	13.47	16.66	13.17
	39	11.51	11.05	12.50	11.58	14.33	12.83	15.24	12.94	15.45	12.78	15.87	13.38	16.31	13.06
	41	11.51	11.05	12.46	11.56	13.90	12.66	14.62	12.71	14.80	12.55	15.16	13.15	15.55	12.83
	43	11.51	11.05	12.41	11.54	13.47	12.47	14.00	12.48	14.15	12.29	14.46	12.89	14.78	12.57

Heat Mode

Air flow	Ambient air temp. DB	Ambient air temp. WB	Indoor air temp. 16 ℃CDB	18 ℃CDB	20 ℃CDB	22 ℃CDB	24 ℃CDB
	-19.8	-20	10.56	10.56	10.56	10.56	10.56
	-17.8	-18	11.24	11.24	11.24	11.24	11.24
	-15.7	-16	11.91	11.91	11.91	11.91	11.91
	-13.7	-14	12.59	12.59	12.59	12.59	12.59
	-11.7	-12	13.27	13.27	13.27	13.27	13.27
Uhi	-9.6	-10	13.95	13.95	13.95	13.95	13.95
	-7.5	-8	14.80	14.80	14.80	14.80	14.80
50	-5.5	-6	15.65	15.65	15.65	15.65	15.65
(m³/min)	-3.4	-4	16.20	16.18	16.15	15.99	15.83
	-1.3	-2	16.74	16.70	16.65	16.33	16.02
	0.8	0	17.65	17.40	17.15	16.54	15.93
	3.9	3	19.16	18.47	17.79	16.79	15.79
	7.0	6	20.93	19.57	18.20	16.93	15.65
	10.1	9	20.79	19.46	18.13	16.82	15.52
	13.2	12	20.66	19.34	18.02	16.70	15.38
	16.9	15.5	20.50	19.18	17.86	16.54	15.22

Air flow	Ambient air temp. (℃DB)	Indoor air temperature 21 ℃CDB 14 ℃CWB TC	21 ℃CDB 14 ℃CWB SHC	23 ℃CDB 16 ℃CWB TC	23 ℃CDB 16 ℃CWB SHC	26 ℃CDB 18 ℃CWB TC	26 ℃CDB 18 ℃CWB SHC	27 ℃CDB 19 ℃CWB TC	27 ℃CDB 19 ℃CWB SHC	28 ℃CDB 20 ℃WB TC	28 ℃CDB 20 ℃WB SHC	31 ℃CDB 22 ℃WB TC	31 ℃CDB 22 ℃WB SHC	33 ℃CDB 24 ℃WB TC	33 ℃CDB 24 ℃WB SHC
	10			11.48	10.15	13.72	11.46	14.84	11.67	15.79	11.81	17.69	12.74	18.36	12.44
	12			11.48	10.15	13.72	11.46	14.84	11.67	15.77	11.80	17.62	12.71	18.28	12.41
	14			11.48	10.15	13.72	11.46	14.84	11.67	15.75	11.80	17.56	12.69	18.20	12.39
	16			11.48	10.15	13.72	11.46	14.84	11.67	15.72	11.78	17.49	12.67	18.13	12.36
	18			11.48	10.15	13.72	11.46	14.84	11.67	15.70	11.77	17.43	12.65	18.05	12.34
Hi	20			11.48	10.15	13.72	11.46	14.84	11.67	15.68	11.77	17.37	12.62	17.97	12.31
	22			11.46	10.14	13.71	11.45	14.84	11.67	15.61	11.74	17.15	12.55	17.72	12.23
42	24			11.44	10.13	13.71	11.45	14.84	11.67	15.54	11.69	16.93	12.47	17.48	12.16
(m³/min)	26			11.43	10.13	13.64	11.42	14.70	11.61	15.35	11.62	16.66	12.38	17.21	12.07
	28	10.36	9.95	11.42	10.13	13.58	11.40	14.56	11.56	15.17	11.56	16.39	12.29	16.94	11.99
	30	10.36	9.95	11.40	10.12	13.48	11.36	14.42	11.51	14.99	11.49	16.14	12.20	16.69	11.91
	32	10.36	9.95	11.37	10.10	13.37	11.30	14.28	11.45	14.82	11.43	15.89	12.12	16.43	11.83
	34	10.36	9.95	11.33	10.09	13.32	11.28	14.09	11.38	14.58	11.34	15.56	12.00	16.09	11.72
	35	10.36	9.95	11.31	10.08	13.30	11.27	14.00	11.34	14.46	11.29	15.39	11.95	15.92	11.67
	36	10.36	9.95	11.30	10.08	13.20	11.23	13.93	11.32	14.32	11.24	15.11	11.85	15.61	11.57
	38	10.36	9.95	11.27	10.06	13.00	11.15	13.79	11.26	14.05	11.14	14.56	11.67	15.00	11.36
	39	10.36	9.95	11.26	10.06	12.90	11.11	13.72	11.24	13.91	11.07	14.28	11.55	14.69	11.27
	41	10.36	9.95	11.22	10.02	12.51	10.96	13.16	11.01	13.32	10.86	13.65	11.34	14.00	11.06
	43	10.36	9.95	11.18	10.00	12.13	10.81	12.60	10.79	12.74	10.65	13.02	11.14	13.31	10.85

Air flow	Ambient air temp. DB	Ambient air temp. WB	Indoor air temp. 16 ℃CDB	18 ℃CDB	20 ℃CDB	22 ℃CDB	24 ℃CDB
	-19.8	-20	9.28	9.28	9.28	9.28	9.28
	-17.8	-18	9.88	9.88	9.88	9.88	9.88
	-15.7	-16	10.47	10.47	10.47	10.47	10.47
	-13.7	-14	11.07	11.07	11.07	11.07	11.07
	-11.7	-12	11.67	11.67	11.67	11.67	11.67
Hi	-9.6	-10	12.27	12.27	12.27	12.27	12.27
	-7.5	-8	13.01	13.01	13.01	13.01	13.01
42	-5.5	-6	13.76	13.76	13.76	13.76	13.76
(m³/min)	-3.4	-4	14.24	14.22	14.20	14.06	13.92
	-1.3	-2	14.72	14.68	14.64	14.36	14.08
	0.8	0	15.52	15.30	15.08	14.54	14.00
	3.9	3	16.84	16.24	15.64	14.76	13.88
	7.0	6	18.40	17.20	16.00	14.88	13.76
	10.1	9	18.28	17.11	15.94	14.79	13.64
	13.2	12	18.16	17.00	15.84	14.68	13.52
	16.9	15.5	18.02	16.86	15.70	14.54	13.38

Air flow	Ambient air temp. (℃DB)	Indoor air temperature 21 ℃CDB 14 ℃CWB TC	21 ℃CDB 14 ℃CWB SHC	23 ℃CDB 16 ℃CWB TC	23 ℃CDB 16 ℃CWB SHC	26 ℃CDB 18 ℃CWB TC	26 ℃CDB 18 ℃CWB SHC	27 ℃CDB 19 ℃CWB TC	27 ℃CDB 19 ℃CWB SHC	28 ℃CDB 20 ℃WB TC	28 ℃CDB 20 ℃WB SHC	31 ℃CDB 22 ℃WB TC	31 ℃CDB 22 ℃WB SHC	33 ℃CDB 24 ℃WB TC	33 ℃CDB 24 ℃WB SHC
	10			10.69	9.31	12.78	10.54	13.82	10.76	14.71	10.88	16.47	11.76	17.10	11.48
	12			10.69	9.31	12.78	10.54	13.82	10.76	14.69	10.87	16.41	11.73	17.03	11.45
	14			10.69	9.31	12.78	10.54	13.82	10.76	14.67	10.86	16.35	11.71	16.96	11.43
	16			10.69	9.31	12.78	10.54	13.82	10.76	14.65	10.86	16.29	11.69	16.88	11.41
	18			10.69	9.31	12.78	10.54	13.82	10.76	14.63	10.85	16.23	11.67	16.81	11.38
Me	20			10.69	9.31	12.78	10.54	13.82	10.76	14.61	10.84	16.18	11.65	16.74	11.36
	22			10.67	9.30	12.77	10.54	13.82	10.76	14.54	10.82	15.97	11.58	16.51	11.29
37.50	24			10.66	9.30	12.77	10.54	13.82	10.76	14.47	10.79	15.77	11.51	16.28	11.21
(m³/min)	26			10.65	9.30	12.71	10.52	13.69	10.71	14.30	10.72	15.52	11.42	16.03	11.13
	28	9.65	9.21	10.64	9.29	12.65	10.49	13.56	10.66	14.13	10.66	15.27	11.33	15.78	11.05
	30	9.65	9.21	10.61	9.28	12.55	10.45	13.43	10.59	13.97	10.60	15.04	11.25	15.54	10.97
	32	9.65	9.21	10.59	9.27	12.45	10.41	13.30	10.54	13.80	10.54	14.80	11.17	15.31	10.90
	34	9.65	9.21	10.55	9.25	12.41	10.39	13.13	10.47	13.58	10.43	14.49	11.06	14.99	10.80
	35	9.65	9.21	10.54	9.25	12.39	10.39	13.04	10.43	13.47	10.39	14.33	11.00	14.83	10.75
	36	9.65	9.21	10.52	9.24	12.29	10.35	12.97	10.41	13.34	10.35	14.08	10.89	14.54	10.63
	38	9.65	9.21	10.50	9.23	12.11	10.28	12.84	10.36	13.08	10.25	13.56	10.72	13.97	10.46
	39	9.65	9.21	10.48	9.23	12.01	10.24	12.78	10.34	12.95	10.20	13.30	10.63	13.68	10.36
	41	9.65	9.21	10.45	9.21	11.65	10.09	12.26	10.14	12.41	10.00	12.71	10.43	13.04	10.17
	43	9.65	9.21	10.41	9.20	11.29	9.95	11.74	9.94	11.86	9.80	12.12	10.23	12.40	9.97

Air flow	Ambient air temp. DB	Ambient air temp. WB	Indoor air temp. 16 ℃CDB	18 ℃CDB	20 ℃CDB	22 ℃CDB	24 ℃CDB
	-19.8	-20	8.53	8.53	8.53	8.53	8.53
	-17.8	-18	9.08	9.08	9.08	9.08	9.08
	-15.7	-16	9.63	9.63	9.63	9.63	9.63
	-13.7	-14	10.18	10.18	10.18	10.18	10.18
	-11.7	-12	10.73	10.73	10.73	10.73	10.73
Me	-9.6	-10	11.28	11.28	11.28	11.28	11.28
	-7.5	-8	11.96	11.96	11.96	11.96	11.96
37.50	-5.5	-6	12.65	12.65	12.65	12.65	12.65
(m³/min)	-3.4	-4	13.09	13.07	13.06	12.93	12.80
	-1.3	-2	13.53	13.50	13.46	13.20	12.94
	0.8	0	14.27	14.07	13.86	13.37	12.87
	3.9	3	15.48	14.93	14.38	13.57	12.76
	7.0	6	16.92	15.81	14.71	13.68	12.65
	10.1	9	16.81	15.73	14.65	13.60	12.54
	13.2	12	16.70	15.63	14.56	13.50	12.43
	16.9	15.5	16.57	15.50	14.43	13.37	12.30

Air flow	Ambient air temp. (℃DB)	Indoor air temperature 21 ℃CDB 14 ℃CWB TC	21 ℃CDB 14 ℃CWB SHC	23 ℃CDB 16 ℃CWB TC	23 ℃CDB 16 ℃CWB SHC	26 ℃CDB 18 ℃CWB TC	26 ℃CDB 18 ℃CWB SHC	27 ℃CDB 19 ℃CWB TC	27 ℃CDB 19 ℃CWB SHC	28 ℃CDB 20 ℃WB TC	28 ℃CDB 20 ℃WB SHC	31 ℃CDB 22 ℃WB TC	31 ℃CDB 22 ℃WB SHC	33 ℃CDB 24 ℃WB TC	33 ℃CDB 24 ℃WB SHC
	10			9.89	8.53	11.83	9.65	12.79	9.84	13.61	9.95	15.25	10.75	15.83	10.49
	12			9.89	8.53	11.83	9.65	12.79	9.84	13.59	9.94	15.19	10.73	15.76	10.47
	14			9.89	8.53	11.83	9.65	12.79	9.84	13.58	9.94	15.14	10.71	15.70	10.45
	16			9.89	8.53	11.83	9.65	12.79	9.84	13.56	9.93	15.08	10.69	15.63	10.43
	18			9.89	8.53	11.83	9.65	12.79	9.84	13.54	9.92	15.03	10.67	15.56	10.40
Lo	20			9.89	8.53	11.83	9.65	12.79	9.84	13.52	9.91	14.97	10.65	15.49	10.38
	22			9.88	8.53	11.82	9.65	12.79	9.84	13.46	9.89	14.78	10.58	15.28	10.31
33.5	24			9.87	8.53	11.82	9.65	12.79	9.84	13.39	9.86	14.59	10.51	15.07	10.24
(m³/min)	26			9.86	8.52	11.76	9.62	12.67	9.79	13.24	9.81	14.36	10.43	14.84	10.16
	28	8.93	8.43	9.85	8.52	11.71	9.60	12.55	9.74	13.08	9.74	14.13	10.35	14.60	10.09
	30	8.93	8.43	9.82	8.50	11.62	9.56	12.43	9.69	12.93	9.69	13.92	10.27	14.39	10.02
	32	8.93	8.43	9.80	8.50	11.53	9.51	12.31	9.65	12.77	9.63	13.70	10.19	14.17	9.95
	34	8.93	8.43	9.77	8.48	11.49	9.49	12.15	9.58	12.57	9.55	13.41	10.09	13.87	9.85
	35	8.93	8.43	9.75	8.47	11.47	9.49	12.07	9.41	12.47	9.51	13.27	10.04	13.73	9.81
	36	8.93	8.43	9.74	8.47	11.38	9.45	12.01	9.53	12.35	9.47	13.03	9.96	13.46	9.72
	38	8.93	8.43	9.72	8.46	11.21	9.38	11.89	9.48	12.11	9.38	12.55	9.79	12.93	9.55
	39	8.93	8.43	9.70	8.45	11.12	9.35	11.83	9.46	11.99	9.33	12.31	9.71	12.66	9.47
	41	8.93	8.43	9.67	8.44	10.79	9.21	11.35	9.25	11.49	9.13	11.77	9.51	12.07	9.26
	43	8.93	8.43	9.64	8.43	10.45	9.08	10.86	9.06	10.98	8.94	11.22	9.32	11.48	9.08

Air flow	Ambient air temp. DB	Ambient air temp. WB	Indoor air temp. 16 ℃CDB	18 ℃CDB	20 ℃CDB	22 ℃CDB	24 ℃CDB
	-19.8	-20	7.78	7.78	7.78	7.78	7.78
	-17.8	-18	8.28	8.28	8.28	8.28	8.28
	-15.7	-16	8.78	8.78	8.78	8.78	8.78
	-13.7	-14	9.28	9.28	9.28	9.28	9.28
	-11.7	-12	9.78	9.78	9.78	9.78	9.78
Lo	-9.6	-10	10.28	10.28	10.28	10.28	10.28
	-7.5	-8	10.91	10.91	10.91	10.91	10.91
33.5	-5.5	-6	11.53	11.53	11.53	11.53	11.53
(m³/min)	-3.4	-4	11.93	11.92	11.90	11.78	11.67
	-1.3	-2	12.34	12.30	12.27	12.04	11.80
	0.8	0	13.01	12.82	12.64	12.19	11.73
	3.9	3	14.11	13.61	13.11	12.37	11.63
	7.0	6	15.42	14.42	13.41	12.47	11.53
	10.1	9	15.32	14.34	13.36	12.40	11.43
	13.2	12	15.22	14.25	13.28	12.30	11.33
	16.9	15.5	15.10	14.13	13.16	12.19	11.21

Note(1) This data shows average statuses out of those possible to occur in the system control.
(Depending on controls, there may be ranges where the operation is not conducted continuously.)

(2) Symbols are as follows
TC :Total cooling capacity(kW)
SHC :Sensible heat capacity(kW)

Cool mode	Uhi	Hi	Me	Lo
Air flow	50.00	42	37.50	33.5
TC	15.55	14.00	13.04	12.07
SHF	0.84	0.81	0.80	0.78

Heat mode	Uhi	Hi	Me	Lo
Air flow	50	42	37.5	33.5
Heating capacity	18.20	16.00	14.71	13.41

Model **FDU224KXE6** Cool Mode

Air flow	Ambient air temp. (°CDB)	Indoor air temperature 21 °CDB 14 °CWB TC	21 °CDB 14 °CWB SHC	23 °CDB 16 °CWB TC	23 °CDB 16 °CWB SHC	26 °CDB 18 °CWB TC	26 °CDB 18 °CWB SHC	27 °CDB 19 °CWB TC	27 °CDB 19 °CWB SHC	28 °CDB 20 °CWB TC	28 °CDB 20 °CWB SHC	31 °CDB 22 °CWB TC	31 °CDB 22 °CWB SHC	33 °CDB 24 °CWB TC	33 °CDB 24 °CWB SHC
Upper limit 65 (m³/min)	10			21.75	17.52	26.00	19.83	28.12	20.27	29.92	20.56	33.51	22.12	34.80	21.55
	12			21.75	17.52	26.00	19.83	28.12	20.27	29.88	20.54	33.39	22.07	34.65	21.50
	14			21.75	17.52	26.00	19.83	28.12	20.27	29.84	20.53	33.27	22.03	34.50	21.44
	16			21.75	17.52	26.00	19.83	28.12	20.27	29.80	20.51	33.15	21.98	34.35	21.39
	18			21.75	17.52	26.00	19.83	28.12	20.27	29.76	20.49	33.03	21.94	34.20	21.35
	20			21.75	17.52	26.00	19.83	28.12	20.27	29.72	20.48	32.91	21.89	34.05	21.29
	22			21.72	17.50	25.99	19.83	28.12	20.27	29.58	20.42	32.49	21.74	33.58	21.13
	24			21.69	17.49	25.98	19.82	28.12	20.27	29.44	20.36	32.08	21.59	33.12	20.98
	26			21.67	17.48	25.86	19.77	27.86	20.16	29.09	20.20	31.57	21.40	32.61	20.80
	28	19.63	17.27	21.65	17.47	25.73	19.69	27.59	20.05	28.75	20.06	31.06	21.21	32.10	20.64
	30	19.63	17.27	21.60	17.45	25.54	19.61	27.33	19.94	28.41	19.93	30.59	21.04	31.62	20.48
	32	19.63	17.27	21.54	17.43	25.34	19.53	27.06	19.83	28.08	19.80	30.12	20.87	31.14	20.32
	34	19.63	17.27	21.47	17.39	25.25	19.49	26.71	19.69	27.63	19.62	29.48	20.64	30.50	20.11
	35	19.63	17.27	21.44	17.38	25.20	19.47	26.53	19.63	27.41	19.54	29.16	20.52	30.18	20.00
	36	19.63	17.27	21.41	17.37	25.01	19.39	26.40	19.57	27.14	19.43	28.64	20.34	29.59	19.81
	38	19.63	17.27	21.36	17.35	24.63	19.23	26.13	19.43	26.62	19.20	27.59	19.93	28.42	19.39
	39	19.63	17.27	21.33	17.33	24.44	19.15	26.00	19.37	26.36	19.10	27.07	19.74	27.83	19.20
	41	19.63	17.27	21.26	17.30	23.71	18.85	24.94	18.95	25.25	18.67	25.87	19.33	26.53	18.79
	43	19.63	17.27	21.18	17.27	22.98	18.52	23.88	18.53	24.14	18.26	24.66	18.87	25.22	18.34

Heat Mode

Air flow	Ambient air temp. DB	Ambient air temp. WB	Indoor air temp. 16 °CDB	18 °CDB	20 °CDB	22 °CDB	24 °CDB
Upper limit 65.00 (m³/min)	-19.8	-20	17.28	17.28	17.28	17.28	17.28
	-17.8	-18	18.39	18.39	18.39	18.39	18.39
	-15.7	-16	19.50	19.50	19.50	19.50	19.50
	-13.7	-14	20.61	20.61	20.61	20.61	20.61
	-11.7	-12	21.73	21.73	21.73	21.73	21.73
	-9.6	-10	22.84	22.84	22.84	22.84	22.84
	-7.5	-8	24.23	24.23	24.23	24.23	24.23
	-5.5	-6	25.62	25.62	25.62	25.62	25.62
	-3.4	-4	26.51	26.48	26.44	26.18	25.92
	-1.3	-2	27.41	27.33	27.26	26.74	26.22
	0.8	0	28.90	28.49	28.08	27.07	26.07
	3.9	3	31.35	30.24	29.12	27.48	25.84
	7.0	6	34.26	32.02	29.79	27.70	25.62
	10.1	9	34.04	31.86	29.68	27.54	25.40
	13.2	12	33.81	31.65	29.49	27.33	25.17
	16.9	15.5	33.55	31.39	29.23	27.07	24.91

Air flow	Ambient air temp. (°CDB)	Indoor air temperature 21 °CDB 14 °CWB TC	21 °CDB 14 °CWB SHC	23 °CDB 16 °CWB TC	23 °CDB 16 °CWB SHC	26 °CDB 18 °CWB TC	26 °CDB 18 °CWB SHC	27 °CDB 19 °CWB TC	27 °CDB 19 °CWB SHC	28 °CDB 20 °CWB TC	28 °CDB 20 °CWB SHC	31 °CDB 22 °CWB TC	31 °CDB 22 °CWB SHC	33 °CDB 24 °CWB TC	33 °CDB 24 °CWB SHC
60.00 (m³/min)	10			20.57	16.39	24.59	18.56	26.60	19.00	28.30	19.25	31.70	20.71	32.91	20.16
	12			20.57	16.39	24.59	18.56	26.60	19.00	28.26	19.23	31.58	20.66	32.77	20.12
	14			20.57	16.39	24.59	18.56	26.60	19.00	28.22	19.22	31.47	20.62	32.63	20.06
	16			20.57	16.39	24.59	18.56	26.60	19.00	28.18	19.20	31.35	20.58	32.48	20.01
	18			20.57	16.39	24.59	18.56	26.60	19.00	28.14	19.18	31.24	20.53	32.34	19.97
	20			20.57	16.39	24.59	18.56	26.60	19.00	28.10	19.17	31.12	20.49	32.20	19.92
	22			20.54	16.37	24.58	18.55	26.60	19.00	27.97	19.11	30.73	20.34	31.76	19.76
	24			20.51	16.36	24.57	18.55	26.60	19.00	27.84	19.06	30.34	20.20	31.32	19.62
	26			20.49	16.35	24.45	18.50	26.34	18.87	27.52	18.94	29.86	20.02	30.84	19.45
	28	18.57	16.15	20.47	16.34	24.34	18.45	26.09	18.76	27.19	18.80	29.38	19.84	30.36	19.29
	30	18.57	16.15	20.42	16.32	24.15	18.37	25.84	18.66	26.87	18.65	28.93	19.67	29.90	19.14
	32	18.57	16.15	20.37	16.30	23.96	18.29	25.59	18.56	26.56	18.53	28.48	19.51	29.45	18.99
	34	18.57	16.15	20.31	16.27	23.88	18.26	25.26	18.42	26.13	18.36	27.88	19.29	28.84	18.78
	35	18.57	16.15	20.27	16.25	23.84	18.24	25.09	18.32	25.92	18.28	27.58	19.18	28.54	18.69
	36	18.57	16.15	20.25	16.25	23.66	18.14	24.96	18.30	25.67	18.18	27.08	19.00	27.98	18.50
	38	18.57	16.15	20.20	16.22	23.30	17.99	24.71	18.20	25.17	17.98	26.09	18.65	26.88	18.11
	39	18.57	16.15	20.17	16.21	23.12	17.91	24.59	18.15	24.93	17.89	25.60	18.44	26.32	17.93
	41	18.57	16.15	20.10	16.18	22.42	17.62	23.58	17.72	23.88	17.46	24.46	18.04	25.09	17.54
	43	18.57	16.15	20.03	16.15	21.73	17.34	22.58	17.32	22.83	17.06	23.33	17.65	23.85	17.11

Air flow	Ambient air temp. DB	Ambient air temp. WB	Indoor air temp. 16 °CDB	18 °CDB	20 °CDB	22 °CDB	24 °CDB
60.00 (m³/min)	-19.8	-20	16.24	16.24	16.24	16.24	16.24
	-17.8	-18	17.29	17.29	17.29	17.29	17.29
	-15.7	-16	18.33	18.33	18.33	18.33	18.33
	-13.7	-14	19.38	19.38	19.38	19.38	19.38
	-11.7	-12	20.42	20.42	20.42	20.42	20.42
	-9.6	-10	21.47	21.47	21.47	21.47	21.47
	-7.5	-8	22.77	22.77	22.77	22.77	22.77
	-5.5	-6	24.08	24.08	24.08	24.08	24.08
	-3.4	-4	24.92	24.89	24.85	24.61	24.36
	-1.3	-2	25.76	25.69	25.62	25.13	24.64
	0.8	0	27.16	26.78	26.39	25.45	24.50
	3.9	3	29.47	28.42	27.37	25.83	24.29
	7.0	6	32.20	30.10	28.00	26.04	24.08
	10.1	9	31.99	29.94	27.90	25.88	23.87
	13.2	12	31.78	29.75	27.72	25.69	23.66
	16.9	15.5	31.54	29.51	27.48	25.45	23.42

Air flow	Ambient air temp. (°CDB)	Indoor air temperature 21 °CDB 14 °CWB TC	21 °CDB 14 °CWB SHC	23 °CDB 16 °CWB TC	23 °CDB 16 °CWB SHC	26 °CDB 18 °CWB TC	26 °CDB 18 °CWB SHC	27 °CDB 19 °CWB TC	27 °CDB 19 °CWB SHC	28 °CDB 20 °CWB TC	28 °CDB 20 °CWB SHC	31 °CDB 22 °CWB TC	31 °CDB 22 °CWB SHC	33 °CDB 24 °CWB TC	33 °CDB 24 °CWB SHC
Hi 51.00 (m³/min)	10			18.36	14.47	21.95	16.37	23.74	16.76	25.26	16.99	28.30	18.34	29.38	17.85
	12			18.36	14.47	21.95	16.37	23.74	16.76	25.23	16.98	28.19	18.30	29.25	17.81
	14			18.36	14.47	21.95	16.37	23.74	16.76	25.19	16.96	28.09	18.26	29.13	17.76
	16			18.36	14.47	21.95	16.37	23.74	16.76	25.16	16.95	27.99	18.22	29.00	17.71
	18			18.36	14.47	21.95	16.37	23.74	16.76	25.13	16.94	27.89	18.18	28.87	17.67
	20			18.36	14.47	21.95	16.37	23.74	16.76	25.09	16.92	27.79	18.14	28.75	17.63
	22			18.34	14.46	21.94	16.37	23.74	16.76	24.97	16.87	27.43	18.00	28.36	17.49
	24			18.31	14.44	21.93	16.37	23.74	16.76	24.86	16.83	27.08	17.87	27.96	17.32
	26			18.29	14.43	21.83	16.30	23.52	16.67	24.57	16.71	26.66	17.68	27.53	17.17
	28	16.58	14.23	18.28	14.43	21.73	16.26	23.30	16.57	24.27	16.58	26.23	17.52	27.10	17.02
	30	16.58	14.23	18.23	14.41	21.56	16.18	23.07	16.48	23.99	16.47	25.83	17.37	26.70	16.88
	32	16.58	14.23	18.19	14.39	21.39	16.11	22.85	16.38	23.71	16.36	25.43	17.21	26.29	16.74
	34	16.58	14.23	18.13	14.36	21.32	16.08	22.55	16.26	23.33	16.20	24.89	17.01	25.75	16.55
	35	16.58	14.23	18.10	14.35	21.28	16.06	22.40	16.13	23.14	16.13	24.62	16.91	25.48	16.47
	36	16.58	14.23	18.08	14.34	21.12	15.99	22.29	16.15	22.92	16.04	24.18	16.75	24.98	16.30
	38	16.58	14.23	18.03	14.32	20.80	15.86	22.06	16.03	22.47	15.83	23.30	16.40	23.99	15.94
	39	16.58	14.23	18.01	14.31	20.64	15.79	21.95	15.98	22.25	15.75	22.85	16.24	23.50	15.77
	41	16.58	14.23	17.95	14.28	20.02	15.53	21.06	15.62	21.32	15.38	21.84	15.87	22.40	15.41
	43	16.58	14.23	17.88	14.25	19.40	15.26	20.16	15.25	20.38	15.01	20.82	15.51	21.30	15.05

Air flow	Ambient air temp. DB	Ambient air temp. WB	Indoor air temp. 16 °CDB	18 °CDB	20 °CDB	22 °CDB	24 °CDB
Hi 51.00 (m³/min)	-19.8	-20	14.50	14.50	14.50	14.50	14.50
	-17.8	-18	15.43	15.43	15.43	15.43	15.43
	-15.7	-16	16.37	16.37	16.37	16.37	16.37
	-13.7	-14	17.30	17.30	17.30	17.30	17.30
	-11.7	-12	18.23	18.23	18.23	18.23	18.23
	-9.6	-10	19.17	19.17	19.17	19.17	19.17
	-7.5	-8	20.33	20.33	20.33	20.33	20.33
	-5.5	-6	21.50	21.50	21.50	21.50	21.50
	-3.4	-4	22.25	22.22	22.19	21.97	21.75
	-1.3	-2	23.00	22.94	22.88	22.44	22.00
	0.8	0	24.25	23.91	23.56	22.72	21.88
	3.9	3	26.31	25.38	24.44	23.06	21.69
	7.0	6	28.75	26.88	25.00	23.25	21.50
	10.1	9	28.56	26.73	24.91	23.11	21.31
	13.2	12	28.38	26.56	24.75	22.94	21.13
	16.9	15.5	28.16	26.34	24.53	22.72	20.91

Air flow	Ambient air temp. (°CDB)	Indoor air temperature 21 °CDB 14 °CWB TC	21 °CDB 14 °CWB SHC	23 °CDB 16 °CWB TC	23 °CDB 16 °CWB SHC	26 °CDB 18 °CWB TC	26 °CDB 18 °CWB SHC	27 °CDB 19 °CWB TC	27 °CDB 19 °CWB SHC	28 °CDB 20 °CWB TC	28 °CDB 20 °CWB SHC	31 °CDB 22 °CWB TC	31 °CDB 22 °CWB SHC	33 °CDB 24 °CWB TC	33 °CDB 24 °CWB SHC
Lower limit 38.00 (m³/min)	10			15.61	11.71	18.66	13.28	20.18	13.64	21.47	13.85	24.05	14.94	24.97	14.51
	12			15.61	11.71	18.66	13.28	20.18	13.64	21.44	13.84	23.97	14.90	24.87	14.48
	14			15.61	11.71	18.66	13.28	20.18	13.64	21.41	13.83	23.88	14.87	24.76	14.43
	16			15.61	11.71	18.66	13.28	20.18	13.64	21.39	13.82	23.79	14.81	24.65	14.38
	18			15.61	11.71	18.66	13.28	20.18	13.64	21.36	13.80	23.70	14.77	24.54	14.33
	20			15.61	11.71	18.66	13.28	20.18	13.64	21.33	13.79	23.62	14.74	24.44	14.29
	22			15.59	11.70	18.65	13.28	20.18	13.64	21.23	13.75	23.32	14.62	24.10	14.17
	24			15.56	11.69	18.64	13.28	20.18	13.64	21.13	13.70	23.02	14.50	23.77	14.04
	26			15.55	11.68	18.56	13.24	19.99	13.55	20.88	13.60	22.66	14.35	23.40	13.90
	28	14.09	11.51	15.54	11.68	18.47	13.18	19.80	13.47	20.63	13.49	22.29	14.20	23.04	13.77
	30	14.09	11.51	15.50	11.66	18.33	13.12	19.61	13.38	20.39	13.38	21.95	14.06	22.69	13.64
	32	14.09	11.51	15.46	11.64	18.18	13.05	19.42	13.30	20.15	13.28	21.61	13.93	22.35	13.52
	34	14.09	11.51	15.41	11.62	18.12	13.02	19.17	13.19	19.83	13.15	21.16	13.75	21.89	13.35
	35	14.09	11.51	15.38	11.61	18.09	13.01	19.04	12.95	19.67	13.08	20.93	13.66	21.66	13.27
	36	14.09	11.51	15.37	11.60	17.95	12.95	18.94	13.09	19.48	13.00	20.55	13.51	21.24	13.12
	38	14.09	11.51	15.33	11.58	17.68	12.83	18.75	13.00	19.10	12.84	19.80	13.22	20.40	12.82
	39	14.09	11.51	15.31	11.57	17.54	12.76	18.66	12.96	18.91	12.76	19.43	13.08	19.97	12.67
	41	14.09	11.51	15.25	11.54	17.02	12.53	17.90	12.62	18.12	12.41	18.56	12.73	19.04	12.33
	43	14.09	11.51	15.20	11.52	16.49	12.30	17.14	12.30	17.32	12.09	17.70	12.41	18.10	12.01

Air flow	Ambient air temp. DB	Ambient air temp. WB	Indoor air temp. 16 °CDB	18 °CDB	20 °CDB	22 °CDB	24 °CDB
Lower limit 38.00 (m³/min)	-19.8	-20	13.05	13.05	13.05	13.05	13.05
	-17.8	-18	13.89	13.89	13.89	13.89	13.89
	-15.7	-16	14.73	14.73	14.73	14.73	14.73
	-13.7	-14	15.57	15.57	15.57	15.57	15.57
	-11.7	-12	16.41	16.41	16.41	16.41	16.41
	-9.6	-10	17.25	17.25	17.25	17.25	17.25
	-7.5	-8	18.30	18.30	18.30	18.30	18.30
	-5.5	-6	19.35	19.35	19.35	19.35	19.35
	-3.4	-4	20.03	20.00	19.97	19.77	19.58
	-1.3	-2	20.70	20.64	20.59	20.19	19.80
	0.8	0	21.83	21.52	21.21	20.45	19.69
	3.9	3	23.68	22.84	21.99	20.76	19.52
	7.0	6	25.88	24.19	22.50	20.93	19.35
	10.1	9	25.71	24.06	22.42	20.80	19.18
	13.2	12	25.54	23.91	22.28	20.64	19.01
	16.9	15.5	25.34	23.71	22.08	20.45	18.82

Note(1) This data shows average statuses out of those possible to occur in the system control.
(Depending on controls, there may be ranges where the operation is not conducted continuously.)

(2) Symbols are as follows
TC :Total cooling capacity(kW)
SHC :Sensible heat capacity(kW)

Cool mode	Uhi	Hi	Me	Lo
Air flow	65.00	60.00	51.00	38.00
TC	26.53	25.09	22.40	19.04
SHF	0.74	0.73	0.72	0.68

Heat mode	Uhi	Hi	Me	Lo
Air flow	65	60	51	38
Heating capacity	29.79	25.00	23.75	22.50

Model **FDU280KXE6** Cool Mode

Air flow	Ambient air temp. (℃DB)	Indoor air temperature 21 ℃DB 14 ℃WB TC	21 ℃DB 14 ℃WB SHC	23 ℃DB 16 ℃WB TC	23 ℃DB 16 ℃WB SHC	26 ℃DB 18 ℃WB TC	26 ℃DB 18 ℃WB SHC	27 ℃DB 19 ℃WB TC	27 ℃DB 19 ℃WB SHC	28 ℃DB 20 ℃WB TC	28 ℃DB 20 ℃WB SHC	31 ℃DB 22 ℃WB TC	31 ℃DB 22 ℃WB SHC	33 ℃DB 24 ℃WB TC	33 ℃DB 24 ℃WB SHC
Upper limit 87 (m³/min)	10			26.61	22.12	31.81	25.02	34.41	25.57	36.61	25.86	41.01	27.97	42.58	27.24
	12			26.61	22.12	31.81	25.02	34.41	25.57	36.56	25.84	40.86	27.87	42.39	27.18
	14			26.61	22.12	31.81	25.02	34.41	25.57	36.51	25.82	40.71	27.82	42.21	27.12
	16			26.61	22.12	31.81	25.02	34.41	25.57	36.46	25.80	40.56	27.76	42.03	27.06
	18			26.61	22.12	31.81	25.02	34.41	25.57	36.41	25.78	40.41	27.71	41.84	27.00
	20			26.61	22.12	31.81	25.02	34.41	25.57	36.36	25.76	40.26	27.66	41.66	26.94
	22			26.57	22.10	31.80	25.01	34.41	25.57	36.19	25.70	39.75	27.47	41.09	26.75
	24			26.53	22.09	31.78	25.00	34.41	25.57	36.02	25.64	39.25	27.29	40.52	26.52
	26			26.51	22.08	31.63	24.94	34.08	25.44	35.60	25.47	38.63	27.03	39.90	26.32
	28	24.02	21.84	26.49	22.07	31.49	24.88	33.76	25.27	35.17	25.31	38.01	26.81	39.28	26.12
	30	24.02	21.84	26.42	22.04	31.24	24.79	33.43	25.14	34.77	25.12	37.43	26.61	38.69	25.94
	32	24.02	21.84	26.36	22.01	31.00	24.65	33.11	25.01	34.36	24.96	36.85	26.41	38.10	25.70
	34	24.02	21.84	26.27	21.98	30.89	24.60	32.68	24.84	33.81	24.75	36.07	26.09	37.31	25.45
	35	24.02	21.84	26.23	21.96	30.84	24.58	32.46	24.67	33.53	24.65	35.68	25.95	36.92	25.32
	36	24.02	21.84	26.20	21.94	30.60	24.48	32.30	24.70	33.21	24.53	35.04	25.74	36.20	25.10
	38	24.02	21.84	26.13	21.92	30.14	24.30	31.97	24.57	32.57	24.29	33.76	25.15	34.77	24.50
	39	24.02	21.84	26.10	21.90	29.91	24.21	31.81	24.50	32.25	24.13	33.12	24.94	34.05	24.27
	41	24.02	21.84	26.01	21.86	29.01	23.85	30.51	23.96	30.89	23.62	31.65	24.43	32.46	23.78
	43	24.02	21.84	25.91	21.82	28.11	23.45	29.21	23.46	29.53	23.08	30.18	23.94	30.86	23.29

Heat Mode

Air flow	Ambient air temp. DB	Ambient air temp. WB	Indoor air temp. 16 ℃DB	18 ℃DB	20 ℃DB	22 ℃DB	24 ℃DB
Upper limit 87.00 (m³/min)	-19.8	-20	21.49	21.49	21.49	21.49	21.49
	-17.8	-18	22.87	22.87	22.87	22.87	22.87
	-15.7	-16	24.26	24.26	24.26	24.26	24.26
	-13.7	-14	25.64	25.64	25.64	25.64	25.64
	-11.7	-12	27.02	27.02	27.02	27.02	27.02
	-9.6	-10	28.41	28.41	28.41	28.41	28.41
	-7.5	-8	30.13	30.13	30.13	30.13	30.13
	-5.5	-6	31.86	31.86	31.86	31.86	31.86
	-3.4	-4	32.97	32.93	32.88	32.56	32.23
	-1.3	-2	34.09	33.99	33.90	33.25	32.60
	0.8	0	35.94	35.43	34.92	33.67	32.42
	3.9	3	39.00	37.61	36.22	34.18	32.14
	7.0	6	42.61	39.83	37.05	34.46	31.86
	10.1	9	42.33	39.62	36.91	34.25	31.59
	13.2	12	42.05	39.37	36.68	33.99	31.31
	16.9	15.5	41.73	39.04	36.36	33.67	30.98

Air flow	Ambient air temp. (℃DB)	Indoor air temperature 21 ℃DB 14 ℃WB TC	21 ℃DB 14 ℃WB SHC	23 ℃DB 16 ℃WB TC	23 ℃DB 16 ℃WB SHC	26 ℃DB 18 ℃WB TC	26 ℃DB 18 ℃WB SHC	27 ℃DB 19 ℃WB TC	27 ℃DB 19 ℃WB SHC	28 ℃DB 20 ℃WB TC	28 ℃DB 20 ℃WB SHC	31 ℃DB 22 ℃WB TC	31 ℃DB 22 ℃WB SHC	33 ℃DB 24 ℃WB TC	33 ℃DB 24 ℃WB SHC
80.00 (m³/min)	10			25.71	21.10	30.73	23.84	33.24	24.39	35.37	24.68	39.62	26.62	41.13	25.94
	12			25.71	21.10	30.73	23.84	33.24	24.39	35.32	24.67	39.47	26.56	40.96	25.88
	14			25.71	21.10	30.73	23.84	33.24	24.39	35.27	24.64	39.33	26.51	40.78	25.82
	16			25.71	21.10	30.73	23.84	33.24	24.39	35.22	24.62	39.19	26.46	40.60	25.76
	18			25.71	21.10	30.73	23.84	33.24	24.39	35.18	24.61	39.04	26.40	40.42	25.70
	20			25.71	21.10	30.73	23.84	33.24	24.39	35.13	24.59	38.90	26.35	40.25	25.65
	22			25.67	21.08	30.72	23.84	33.24	24.39	34.96	24.52	38.41	26.17	39.70	25.46
	24			25.63	21.07	30.71	23.83	33.24	24.39	34.80	24.46	37.92	25.99	39.15	25.28
	26			25.61	21.05	30.56	23.77	32.93	24.26	34.39	24.30	37.32	25.77	38.55	25.08
	28	23.21	20.78	25.59	21.05	30.42	23.71	32.61	24.13	33.98	24.14	36.72	25.55	37.95	24.88
	30	23.21	20.78	25.53	21.02	30.18	23.61	32.30	23.96	33.59	23.99	36.16	25.36	37.38	24.69
	32	23.21	20.78	25.46	20.99	29.95	23.52	31.99	23.84	33.19	23.84	35.60	25.15	36.81	24.51
	34	23.21	20.78	25.38	20.96	29.84	23.47	31.57	23.67	32.66	23.59	34.85	24.89	36.05	24.21
	35	23.21	20.78	25.34	20.94	29.79	23.45	31.36	23.52	32.40	23.49	34.47	24.75	35.67	24.09
	36	23.21	20.78	25.31	20.93	29.57	23.36	31.20	23.53	32.09	23.37	33.85	24.49	34.98	23.86
	38	23.21	20.78	25.24	20.89	29.12	23.18	30.89	23.40	31.46	23.13	32.61	24.05	33.59	23.42
	39	23.21	20.78	25.21	20.88	28.89	23.08	30.73	23.34	31.15	23.01	32.00	23.84	32.90	23.21
	41	23.21	20.78	25.12	20.84	28.03	22.69	29.48	22.85	29.84	22.52	30.58	23.30	31.36	22.67
	43	23.21	20.78	25.04	20.81	27.16	22.26	28.22	22.32	28.53	21.90	29.15	22.82	29.81	22.19

Air flow	Ambient air temp. DB	Ambient air temp. WB	Indoor air temp. 16 ℃DB	18 ℃DB	20 ℃DB	22 ℃DB	24 ℃DB
80.00 (m³/min)	-19.8	-20	18.27	18.27	18.27	18.27	18.27
	-17.8	-18	19.45	19.45	19.45	19.45	19.45
	-15.7	-16	20.62	20.62	20.62	20.62	20.62
	-13.7	-14	21.80	21.80	21.80	21.80	21.80
	-11.7	-12	22.97	22.97	22.97	22.97	22.97
	-9.6	-10	24.15	24.15	24.15	24.15	24.15
	-7.5	-8	25.62	25.62	25.62	25.62	25.62
	-5.5	-6	27.09	27.09	27.09	27.09	27.09
	-3.4	-4	28.04	28.00	27.96	27.68	27.41
	-1.3	-2	28.98	28.90	28.82	28.27	27.72
	0.8	0	30.56	30.12	29.69	28.63	27.56
	3.9	3	33.15	31.97	30.79	29.06	27.33
	7.0	6	36.23	33.86	31.50	29.30	27.09
	10.1	9	35.99	33.69	31.38	29.12	26.85
	13.2	12	35.75	33.47	31.19	28.90	26.62
	16.9	15.5	35.48	33.19	30.91	28.63	26.34

Air flow	Ambient air temp. (℃DB)	Indoor air temperature 21 ℃DB 14 ℃WB TC	21 ℃DB 14 ℃WB SHC	23 ℃DB 16 ℃WB TC	23 ℃DB 16 ℃WB SHC	26 ℃DB 18 ℃WB TC	26 ℃DB 18 ℃WB SHC	27 ℃DB 19 ℃WB TC	27 ℃DB 19 ℃WB SHC	28 ℃DB 20 ℃WB TC	28 ℃DB 20 ℃WB SHC	31 ℃DB 22 ℃WB TC	31 ℃DB 22 ℃WB SHC	33 ℃DB 24 ℃WB TC	33 ℃DB 24 ℃WB SHC
Hi 68.00 (m³/min)	10			22.95	18.33	27.44	20.75	29.68	21.24	31.58	21.54	35.37	23.24	36.73	22.64
	12			22.95	18.33	27.44	20.75	29.68	21.24	31.53	21.52	35.24	23.19	36.57	22.58
	14			22.95	18.33	27.44	20.75	29.68	21.24	31.49	21.47	35.12	23.14	36.41	22.49
	16			22.95	18.33	27.44	20.75	29.68	21.24	31.45	21.46	34.99	23.09	36.25	22.44
	18			22.95	18.33	27.44	20.75	29.68	21.24	31.41	21.44	34.86	23.04	36.09	22.39
	20			22.95	18.33	27.44	20.75	29.68	21.24	31.36	21.42	34.73	23.00	35.93	22.33
	22			22.92	18.32	27.43	20.74	29.68	21.24	31.22	21.37	34.29	22.80	35.44	22.17
	24			22.89	18.30	27.42	20.74	29.68	21.24	31.07	21.31	33.85	22.63	34.95	22.00
	26			22.87	18.30	27.29	20.68	29.40	21.12	30.71	21.16	33.32	22.44	34.42	21.79
	28	20.72	18.07	22.85	18.29	27.16	20.63	29.12	21.01	30.34	21.02	32.78	22.21	33.88	21.61
	30	20.72	18.07	22.79	18.26	26.95	20.54	28.84	20.86	29.99	20.88	32.29	22.03	33.37	21.43
	32	20.72	18.07	22.74	18.24	26.74	20.46	28.56	20.75	29.64	20.74	31.79	21.85	32.87	21.27
	34	20.72	18.07	22.66	18.20	26.65	20.42	28.19	20.60	29.16	20.52	31.11	21.61	32.19	20.93
	35	20.72	18.07	22.62	18.19	26.60	20.40	28.00	20.44	28.93	20.44	30.78	21.38	31.85	20.82
	36	20.72	18.07	22.60	18.18	26.40	20.28	27.86	20.47	28.65	20.33	30.23	21.18	31.23	20.62
	38	20.72	18.07	22.54	18.15	26.00	20.11	27.58	20.35	28.09	20.11	29.12	20.79	29.99	20.22
	39	20.72	18.07	22.51	18.14	25.80	20.03	27.44	20.30	27.82	20.01	28.57	20.59	29.37	20.02
	41	20.72	18.07	22.43	18.10	25.02	19.71	26.32	19.82	26.65	19.53	27.30	20.16	28.00	19.59
	43	20.72	18.07	22.35	18.07	24.25	19.37	25.20	19.38	25.48	19.09	26.03	19.72	26.62	19.16

Air flow	Ambient air temp. DB	Ambient air temp. WB	Indoor air temp. 16 ℃DB	18 ℃DB	20 ℃DB	22 ℃DB	24 ℃DB
Hi 68.00 (m³/min)	-19.8	-20	16.44	16.44	16.44	16.44	16.44
	-17.8	-18	17.50	17.50	17.50	17.50	17.50
	-15.7	-16	18.56	18.56	18.56	18.56	18.56
	-13.7	-14	19.62	19.62	19.62	19.62	19.62
	-11.7	-12	20.68	20.68	20.68	20.68	20.68
	-9.6	-10	21.74	21.74	21.74	21.74	21.74
	-7.5	-8	23.06	23.06	23.06	23.06	23.06
	-5.5	-6	24.38	24.38	24.38	24.38	24.38
	-3.4	-4	25.23	25.20	25.16	24.91	24.66
	-1.3	-2	26.08	26.01	25.94	25.44	24.95
	0.8	0	27.50	27.11	26.72	25.76	24.81
	3.9	3	29.84	28.78	27.71	26.15	24.59
	7.0	6	32.60	30.48	28.35	26.37	24.38
	10.1	9	32.39	30.32	28.24	26.21	24.17
	13.2	12	32.18	30.12	28.07	26.01	23.96
	16.9	15.5	31.93	29.87	27.82	25.76	23.71

Air flow	Ambient air temp. (℃DB)	Indoor air temperature 21 ℃DB 14 ℃WB TC	21 ℃DB 14 ℃WB SHC	23 ℃DB 16 ℃WB TC	23 ℃DB 16 ℃WB SHC	26 ℃DB 18 ℃WB TC	26 ℃DB 18 ℃WB SHC	27 ℃DB 19 ℃WB TC	27 ℃DB 19 ℃WB SHC	28 ℃DB 20 ℃WB TC	28 ℃DB 20 ℃WB SHC	31 ℃DB 22 ℃WB TC	31 ℃DB 22 ℃WB SHC	33 ℃DB 24 ℃WB TC	33 ℃DB 24 ℃WB SHC
Lower limit 51.00 (m³/min)	10			17.67	14.09	21.13	15.92	22.85	16.28	24.31	16.50	27.24	17.83	28.28	17.37
	12			17.67	14.09	21.13	15.92	22.85	16.28	24.28	16.48	27.14	17.80	28.16	17.33
	14			17.67	14.09	21.13	15.92	22.85	16.28	24.25	16.47	27.04	17.76	28.04	17.28
	16			17.67	14.09	21.13	15.92	22.85	16.28	24.22	16.46	26.94	17.72	27.91	17.24
	18			17.67	14.09	21.13	15.92	22.85	16.28	24.18	16.44	26.84	17.68	27.79	17.20
	20			17.67	14.09	21.13	15.92	22.85	16.28	24.15	16.43	26.74	17.64	27.67	17.16
	22			17.65	14.09	21.12	15.92	22.85	16.28	24.04	16.39	26.41	17.52	27.29	17.02
	24			17.62	14.07	21.11	15.91	22.85	16.28	23.92	16.34	26.07	17.39	26.92	16.90
	26			17.61	14.07	21.01	15.87	22.64	16.19	23.64	16.23	25.66	17.23	26.50	16.75
	28	15.95	13.87	17.59	14.06	20.91	15.83	22.42	16.10	23.36	16.11	25.24	17.08	26.09	16.58
	30	15.95	13.87	17.55	14.02	20.75	15.76	22.21	16.01	23.09	16.00	24.86	16.91	25.70	16.45
	32	15.95	13.87	17.51	14.00	20.59	15.69	21.99	15.93	22.82	15.90	24.48	16.77	25.31	16.32
	34	15.95	13.87	17.45	13.97	20.52	15.66	21.70	15.81	22.46	15.75	23.96	16.58	24.78	16.14
	35	15.95	13.87	17.42	13.96	20.48	15.64	21.56	15.74	22.27	15.68	23.70	16.49	24.52	16.06
	36	15.95	13.87	17.40	13.95	20.33	15.58	21.45	15.70	22.06	15.60	23.27	16.33	24.05	15.90
	38	15.95	13.87	17.36	13.93	20.02	15.45	21.24	15.62	21.63	15.43	22.42	16.00	23.09	15.56
	39	15.95	13.87	17.33	13.92	19.86	15.38	21.13	15.57	21.42	15.34	22.00	15.84	22.62	15.40
	41	15.95	13.87	17.27	13.89	19.27	15.14	20.27	15.22	20.52	14.99	21.02	15.50	21.56	15.06
	43	15.95	13.87	17.21	13.87	18.67	14.89	19.40	14.88	19.62	14.65	20.04	15.15	20.50	14.72

Air flow	Ambient air temp. DB	Ambient air temp. WB	Indoor air temp. 16 ℃DB	18 ℃DB	20 ℃DB	22 ℃DB	24 ℃DB
Lower limit 51.00 (m³/min)	-19.8	-20	14.62	14.62	14.62	14.62	14.62
	-17.8	-18	15.56	15.56	15.56	15.56	15.56
	-15.7	-16	16.50	16.50	16.50	16.50	16.50
	-13.7	-14	17.44	17.44	17.44	17.44	17.44
	-11.7	-12	18.38	18.38	18.38	18.38	18.38
	-9.6	-10	19.32	19.32	19.32	19.32	19.32
	-7.5	-8	20.50	20.50	20.50	20.50	20.50
	-5.5	-6	21.67	21.67	21.67	21.67	21.67
	-3.4	-4	22.43	22.40	22.37	22.14	21.92
	-1.3	-2	23.18	23.12	23.06	22.62	22.18
	0.8	0	24.44	24.10	23.75	22.90	22.05
	3.9	3	26.52	25.58	24.63	23.25	21.86
	7.0	6	28.98	27.09	25.20	23.44	21.67
	10.1	9	28.79	26.95	25.11	23.29	21.48
	13.2	12	28.60	26.78	24.95	23.12	21.29
	16.9	15.5	28.38	26.55	24.73	22.90	21.07

Note(1) This data shows average statuses out of those possible to occur in the system control.
(Depending on controls, there may be ranges where the operation is not conducted continuously.)

(2) Symbols are as follows
TC :Total cooling capacity(kW)
SHC :Sensible heat capacity(kW)

Cool mode	Uhi	Hi	Me	Lo
Air flow	87.00	80.00	68.00	51.00
TC	32.46	31.36	28.00	21.56
SHF	0.76	0.75	0.73	0.73

Heat mode	Uhi	Hi	Me	Lo
Air flow	87	80	68	51
Heating capacity	37.05	31.50	28.35	25.20

Model **FDUM22KXE6** Cool Mode

Air flow	Ambient air temp. (°CDB)	Indoor air temperature 21 °CDB 14 °CWB TC	21 °CDB 14 °CWB SHC	23 °CDB 16 °CWB TC	23 °CDB 16 °CWB SHC	26 °CDB 18 °CWB TC	26 °CDB 18 °CWB SHC	27 °CDB 19 °CWB TC	27 °CDB 19 °CWB SHC	28 °CDB 20 °CWB TC	28 °CDB 20 °CWB SHC	31 °CDB 22 °CWB TC	31 °CDB 22 °CWB SHC	33 °CDB 24 °CWB TC	33 °CDB 24 °CWB SHC
Uhi	10			1.89	1.81	2.25	2.16	2.44	2.20	2.59	2.22	2.91	2.41	3.02	2.37
	12			1.89	1.81	2.25	2.16	2.44	2.20	2.59	2.22	2.89	2.41	3.00	2.36
	14			1.89	1.81	2.25	2.16	2.44	2.20	2.59	2.22	2.88	2.41	2.99	2.35
	16			1.89	1.81	2.25	2.16	2.44	2.20	2.58	2.22	2.87	2.40	2.98	2.35
	18			1.89	1.81	2.25	2.16	2.44	2.20	2.58	2.22	2.86	2.40	2.96	2.34
	20			1.89	1.81	2.25	2.16	2.44	2.20	2.58	2.22	2.85	2.40	2.95	2.34
	22			1.88	1.80	2.25	2.16	2.44	2.20	2.56	2.21	2.82	2.38	2.91	2.33
11	24			1.88	1.80	2.25	2.16	2.44	2.20	2.55	2.20	2.78	2.37	2.87	2.32
(m³/min)	26			1.88	1.80	2.24	2.15	2.42	2.20	2.52	2.19	2.74	2.36	2.83	2.30
	28	1.70	1.63	1.88	1.80	2.23	2.14	2.39	2.18	2.49	2.19	2.69	2.34	2.78	2.29
	30	1.70	1.63	1.87	1.80	2.21	2.12	2.37	2.18	2.46	2.18	2.65	2.33	2.74	2.26
	32	1.70	1.63	1.87	1.80	2.20	2.11	2.35	2.17	2.43	2.16	2.61	2.31	2.70	2.25
	34	1.70	1.63	1.86	1.79	2.19	2.10	2.32	2.16	2.40	2.15	2.56	2.28	2.64	2.23
	35	1.70	1.63	1.86	1.79	2.19	2.10	2.30	2.14	2.38	2.14	2.53	2.27	2.62	2.23
	36	1.70	1.63	1.86	1.79	2.17	2.08	2.29	2.15	2.35	2.14	2.48	2.26	2.57	2.21
	38	1.70	1.63	1.85	1.78	2.14	2.05	2.27	2.14	2.31	2.12	2.39	2.23	2.46	2.19
	39	1.70	1.63	1.85	1.78	2.12	2.04	2.25	2.13	2.28	2.11	2.35	2.22	2.41	2.17
	41	1.70	1.63	1.84	1.77	2.06	1.98	2.16	2.07	2.19	2.08	2.24	2.15	2.30	2.15
	43	1.70	1.63	1.84	1.77	1.99	1.91	2.07	1.99	2.09	2.01	2.14	2.05	2.19	2.10

Heat Mode

Air flow	Ambient air temp. DB	Ambient air temp. WB	Indoor air temp. 16 °CDB	18 °CDB	20 °CDB	22 °CDB	24 °CDB
Uhi	-19.8	-20	1.53	1.53	1.53	1.53	1.53
	-17.8	-18	1.63	1.63	1.63	1.63	1.63
	-15.7	-16	1.73	1.73	1.73	1.73	1.73
	-13.7	-14	1.83	1.83	1.83	1.83	1.83
	-11.7	-12	1.93	1.93	1.93	1.93	1.93
	-9.6	-10	2.02	2.02	2.02	2.02	2.02
	-7.5	-8	2.15	2.15	2.15	2.15	2.15
11	-5.5	-6	2.27	2.27	2.27	2.27	2.27
(m³/min)	-3.4	-4	2.35	2.35	2.34	2.32	2.30
	-1.3	-2	2.43	2.42	2.42	2.37	2.32
	0.8	0	2.56	2.52	2.49	2.40	2.31
	3.9	3	2.78	2.68	2.58	2.44	2.29
	7.0	6	3.04	2.84	2.64	2.46	2.27
	10.1	9	3.02	2.82	2.63	2.44	2.25
	13.2	12	3.00	2.81	2.61	2.42	2.23
	16.9	15.5	2.97	2.78	2.59	2.40	2.21

Air flow	Ambient air temp. (°CDB)	Indoor air temperature 21 °CDB 14 °CWB TC	21 °CDB 14 °CWB SHC	23 °CDB 16 °CWB TC	23 °CDB 16 °CWB SHC	26 °CDB 18 °CWB TC	26 °CDB 18 °CWB SHC	27 °CDB 19 °CWB TC	27 °CDB 19 °CWB SHC	28 °CDB 20 °CWB TC	28 °CDB 20 °CWB SHC	31 °CDB 22 °CWB TC	31 °CDB 22 °CWB SHC	33 °CDB 24 °CWB TC	33 °CDB 24 °CWB SHC
Hi	10			1.80	1.73	2.16	2.03	2.33	2.06	2.48	2.08	2.78	2.26	2.89	2.21
	12			1.80	1.73	2.16	2.03	2.33	2.06	2.48	2.08	2.77	2.26	2.87	2.21
	14			1.80	1.73	2.16	2.03	2.33	2.06	2.47	2.08	2.76	2.25	2.86	2.20
	16			1.80	1.73	2.16	2.03	2.33	2.06	2.47	2.08	2.75	2.25	2.85	2.20
	18			1.80	1.73	2.16	2.03	2.33	2.06	2.47	2.08	2.74	2.24	2.84	2.20
	20			1.80	1.73	2.16	2.03	2.33	2.06	2.46	2.07	2.73	2.24	2.82	2.19
	22			1.80	1.73	2.15	2.03	2.33	2.06	2.45	2.07	2.69	2.23	2.78	2.18
10	24			1.80	1.73	2.15	2.03	2.33	2.06	2.44	2.07	2.66	2.22	2.75	2.17
(m³/min)	26			1.80	1.73	2.14	2.02	2.31	2.05	2.41	2.06	2.62	2.20	2.70	2.14
	28	1.63	1.56	1.80	1.73	2.13	2.02	2.29	2.05	2.38	2.04	2.58	2.19	2.66	2.13
	30	1.63	1.56	1.79	1.72	2.12	2.02	2.27	2.04	2.36	2.03	2.54	2.16	2.62	2.11
	32	1.63	1.56	1.79	1.72	2.10	2.01	2.24	2.03	2.33	2.02	2.50	2.15	2.58	2.10
	34	1.63	1.56	1.78	1.71	2.09	2.00	2.21	2.01	2.29	2.01	2.44	2.13	2.53	2.09
	35	1.63	1.56	1.78	1.71	2.09	2.00	2.20	2.00	2.27	2.00	2.42	2.13	2.50	2.08
	36	1.63	1.56	1.78	1.71	2.07	1.99	2.19	2.01	2.25	1.99	2.37	2.11	2.45	2.07
	38	1.63	1.56	1.77	1.70	2.04	1.96	2.17	2.00	2.21	1.98	2.29	2.09	2.36	2.05
	39	1.63	1.56	1.77	1.70	2.03	1.95	2.16	2.00	2.19	1.98	2.24	2.07	2.31	2.03
	41	1.63	1.56	1.76	1.69	1.97	1.89	2.07	1.95	2.09	1.93	2.14	2.05	2.20	2.00
	43	1.63	1.56	1.76	1.69	1.91	1.83	1.98	1.90	2.00	1.90	2.05	1.97	2.09	1.97

Air flow	Ambient air temp. DB	Ambient air temp. WB	Indoor air temp. 16 °CDB	18 °CDB	20 °CDB	22 °CDB	24 °CDB
Hi	-19.8	-20	1.45	1.45	1.45	1.45	1.45
	-17.8	-18	1.54	1.54	1.54	1.54	1.54
	-15.7	-16	1.64	1.64	1.64	1.64	1.64
	-13.7	-14	1.73	1.73	1.73	1.73	1.73
	-11.7	-12	1.82	1.82	1.82	1.82	1.82
	-9.6	-10	1.92	1.92	1.92	1.92	1.92
	-7.5	-8	2.03	2.03	2.03	2.03	2.03
10	-5.5	-6	2.15	2.15	2.15	2.15	2.15
(m³/min)	-3.4	-4	2.23	2.22	2.22	2.20	2.18
	-1.3	-2	2.30	2.29	2.29	2.24	2.20
	0.8	0	2.43	2.39	2.36	2.27	2.19
	3.9	3	2.63	2.54	2.44	2.31	2.17
	7.0	6	2.88	2.69	2.50	2.33	2.15
	10.1	9	2.86	2.67	2.49	2.31	2.13
	13.2	12	2.84	2.66	2.48	2.29	2.11
	16.9	15.5	2.82	2.63	2.45	2.27	2.09

Air flow	Ambient air temp. (°CDB)	Indoor air temperature 21 °CDB 14 °CWB TC	21 °CDB 14 °CWB SHC	23 °CDB 16 °CWB TC	23 °CDB 16 °CWB SHC	26 °CDB 18 °CWB TC	26 °CDB 18 °CWB SHC	27 °CDB 19 °CWB TC	27 °CDB 19 °CWB SHC	28 °CDB 20 °CWB TC	28 °CDB 20 °CWB SHC	31 °CDB 22 °CWB TC	31 °CDB 22 °CWB SHC	33 °CDB 24 °CWB TC	33 °CDB 24 °CWB SHC
Me	10			1.70	1.63	2.04	1.91	2.20	1.94	2.35	1.95	2.63	2.12	2.73	2.07
	12			1.70	1.63	2.04	1.91	2.20	1.94	2.34	1.95	2.62	2.11	2.72	2.07
	14			1.70	1.63	2.04	1.91	2.20	1.94	2.34	1.95	2.61	2.11	2.70	2.07
	16			1.70	1.63	2.04	1.91	2.20	1.94	2.34	1.95	2.60	2.11	2.69	2.06
	18			1.70	1.63	2.04	1.91	2.20	1.94	2.33	1.95	2.59	2.10	2.68	2.06
	20			1.70	1.63	2.04	1.91	2.20	1.94	2.33	1.95	2.58	2.10	2.67	2.06
	22			1.70	1.63	2.04	1.91	2.20	1.94	2.32	1.94	2.55	2.09	2.63	2.05
9	24			1.70	1.63	2.04	1.91	2.20	1.94	2.31	1.94	2.51	2.08	2.60	2.03
(m³/min)	26			1.70	1.63	2.03	1.90	2.18	1.92	2.28	1.93	2.48	2.07	2.56	2.02
	28	1.54	1.48	1.70	1.63	2.02	1.90	2.16	1.92	2.25	1.92	2.44	2.05	2.52	2.01
	30	1.54	1.48	1.69	1.62	2.00	1.89	2.14	1.91	2.23	1.91	2.40	2.04	2.48	2.00
	32	1.54	1.48	1.69	1.62	1.99	1.89	2.12	1.90	2.20	1.90	2.36	2.03	2.44	1.98
	34	1.54	1.48	1.68	1.61	1.98	1.88	2.09	1.89	2.17	1.89	2.31	2.01	2.39	1.97
	35	1.54	1.48	1.68	1.61	1.98	1.88	2.08	1.87	2.15	1.88	2.29	2.01	2.37	1.97
	36	1.54	1.48	1.68	1.61	1.96	1.88	2.07	1.88	2.13	1.88	2.25	1.99	2.32	1.95
	38	1.54	1.48	1.67	1.60	1.93	1.85	2.05	1.88	2.09	1.86	2.16	1.96	2.23	1.92
	39	1.54	1.48	1.67	1.60	1.92	1.84	2.04	1.87	2.07	1.85	2.12	1.95	2.18	1.90
	41	1.54	1.48	1.67	1.60	1.86	1.79	1.96	1.85	1.98	1.82	2.03	1.92	2.08	1.88
	43	1.54	1.48	1.66	1.59	1.80	1.73	1.87	1.80	1.89	1.79	1.93	1.85	1.98	1.84

Air flow	Ambient air temp. DB	Ambient air temp. WB	Indoor air temp. 16 °CDB	18 °CDB	20 °CDB	22 °CDB	24 °CDB
Me	-19.8	-20	1.36	1.36	1.36	1.36	1.36
	-17.8	-18	1.45	1.45	1.45	1.45	1.45
	-15.7	-16	1.54	1.54	1.54	1.54	1.54
	-13.7	-14	1.63	1.63	1.63	1.63	1.63
	-11.7	-12	1.71	1.71	1.71	1.71	1.71
	-9.6	-10	1.80	1.80	1.80	1.80	1.80
	-7.5	-8	1.91	1.91	1.91	1.91	1.91
9	-5.5	-6	2.02	2.02	2.02	2.02	2.02
(m³/min)	-3.4	-4	2.09	2.09	2.09	2.07	2.04
	-1.3	-2	2.16	2.16	2.15	2.11	2.07
	0.8	0	2.28	2.25	2.21	2.14	2.06
	3.9	3	2.47	2.39	2.30	2.17	2.04
	7.0	6	2.70	2.53	2.35	2.19	2.02
	10.1	9	2.68	2.51	2.34	2.17	2.00
	13.2	12	2.67	2.50	2.33	2.16	1.99
	16.9	15.5	2.65	2.48	2.31	2.14	1.97

Air flow	Ambient air temp. (°CDB)	Indoor air temperature 21 °CDB 14 °CWB TC	21 °CDB 14 °CWB SHC	23 °CDB 16 °CWB TC	23 °CDB 16 °CWB SHC	26 °CDB 18 °CWB TC	26 °CDB 18 °CWB SHC	27 °CDB 19 °CWB TC	27 °CDB 19 °CWB SHC	28 °CDB 20 °CWB TC	28 °CDB 20 °CWB SHC	31 °CDB 22 °CWB TC	31 °CDB 22 °CWB SHC	33 °CDB 24 °CWB TC	33 °CDB 24 °CWB SHC
Lo	10			1.61	1.55	1.92	1.75	2.08	1.78	2.21	1.79	2.48	1.95	2.57	1.90
	12			1.61	1.55	1.92	1.75	2.08	1.78	2.21	1.79	2.47	1.94	2.56	1.90
	14			1.61	1.55	1.92	1.75	2.08	1.78	2.20	1.79	2.46	1.94	2.55	1.90
	16			1.61	1.55	1.92	1.75	2.08	1.78	2.20	1.79	2.45	1.94	2.54	1.90
	18			1.61	1.55	1.92	1.75	2.08	1.78	2.20	1.79	2.44	1.93	2.53	1.89
	20			1.61	1.55	1.92	1.75	2.08	1.78	2.20	1.79	2.43	1.93	2.52	1.89
	22			1.60	1.54	1.92	1.75	2.08	1.78	2.19	1.79	2.40	1.92	2.48	1.88
8	24			1.60	1.54	1.92	1.75	2.08	1.78	2.17	1.78	2.37	1.91	2.45	1.87
(m³/min)	26			1.60	1.54	1.91	1.74	2.06	1.77	2.15	1.77	2.33	1.90	2.41	1.86
	28	1.45	1.39	1.60	1.54	1.90	1.74	2.04	1.76	2.12	1.76	2.29	1.88	2.37	1.84
	30	1.45	1.39	1.60	1.54	1.89	1.74	2.02	1.76	2.10	1.75	2.26	1.87	2.34	1.83
	32	1.45	1.39	1.59	1.53	1.87	1.73	2.00	1.75	2.07	1.74	2.23	1.86	2.30	1.82
	34	1.45	1.39	1.59	1.53	1.87	1.73	1.97	1.74	2.04	1.73	2.18	1.85	2.25	1.80
	35	1.45	1.39	1.58	1.52	1.86	1.73	1.96	1.72	2.02	1.72	2.15	1.83	2.23	1.80
	36	1.45	1.39	1.58	1.52	1.85	1.72	1.95	1.73	2.01	1.72	2.12	1.82	2.19	1.79
	38	1.45	1.39	1.58	1.52	1.82	1.71	1.93	1.72	1.97	1.71	2.04	1.79	2.10	1.76
	39	1.45	1.39	1.58	1.52	1.81	1.71	1.92	1.72	1.95	1.70	2.00	1.78	2.06	1.75
	41	1.45	1.39	1.57	1.51	1.75	1.68	1.84	1.69	1.87	1.67	1.91	1.76	1.96	1.71
	43	1.45	1.39	1.56	1.50	1.70	1.63	1.76	1.66	1.78	1.64	1.82	1.72	1.86	1.68

Air flow	Ambient air temp. DB	Ambient air temp. WB	Indoor air temp. 16 °CDB	18 °CDB	20 °CDB	22 °CDB	24 °CDB
Lo	-19.8	-20	1.26	1.26	1.26	1.26	1.26
	-17.8	-18	1.35	1.35	1.35	1.35	1.35
	-15.7	-16	1.43	1.43	1.43	1.43	1.43
	-13.7	-14	1.51	1.51	1.51	1.51	1.51
	-11.7	-12	1.59	1.59	1.59	1.59	1.59
	-9.6	-10	1.67	1.67	1.67	1.67	1.67
	-7.5	-8	1.77	1.77	1.77	1.77	1.77
8	-5.5	-6	1.87	1.87	1.87	1.87	1.87
(m³/min)	-3.4	-4	1.94	1.94	1.93	1.92	1.90
	-1.3	-2	2.01	2.00	1.99	1.96	1.92
	0.8	0	2.11	2.08	2.05	1.98	1.91
	3.9	3	2.29	2.21	2.13	2.01	1.89
	7.0	6	2.51	2.34	2.18	2.03	1.87
	10.1	9	2.49	2.33	2.17	2.02	1.86
	13.2	12	2.47	2.32	2.16	2.00	1.84
	16.9	15.5	2.46	2.30	2.14	1.98	1.82

Note(1) This data shows average statuses out of those possible to occur in the system control.
(Depending on controls, there may be ranges where the operation is not conducted continuously.)
(2) Symbols are as follows
TC :Total cooling capacity(kW)
SHC :Sensible heat capacity(kW)

Cool mode	Uhi	Hi	Me	Lo
Air flow	11.00	10	9	8
TC	2.30	2.20	2.08	1.96
SHF	0.93	0.91	0.90	0.88

Heat mode	Uhi	Hi	Me	Lo
Air flow	11	10	9	8
Heating capacity	2.64	2.50	2.35	2.18

Model **FDUM28KXE6** Cool Mode

Air flow	Ambient air temp. (°CDB)	Indoor air temperature 21 °CDB 14 °CWB TC	21 °CDB 14 °CWB SHC	23 °CDB 16 °CWB TC	23 °CDB 16 °CWB SHC	26 °CDB 18 °CWB TC	26 °CDB 18 °CWB SHC	27 °CDB 19 °CWB TC	27 °CDB 19 °CWB SHC	28 °CDB 20 °CWB TC	28 °CDB 20 °CWB SHC	31 °CDB 22 °CWB TC	31 °CDB 22 °CWB SHC	33 °CDB 24 °CWB TC	33 °CDB 24 °CWB SHC
Uhi	10			2.56	2.46	3.06	2.87	3.31	2.92	3.52	2.93	3.94	3.19	4.09	3.12
	12			2.56	2.46	3.06	2.87	3.31	2.92	3.51	2.93	3.93	3.19	4.07	3.12
	14			2.56	2.46	3.06	2.87	3.31	2.92	3.51	2.93	3.91	3.19	4.06	3.12
	16			2.56	2.46	3.06	2.87	3.31	2.92	3.50	2.93	3.90	3.18	4.04	3.11
	18			2.56	2.46	3.06	2.87	3.31	2.92	3.50	2.93	3.88	3.18	4.02	3.11
	20			2.56	2.46	3.06	2.87	3.31	2.92	3.49	2.92	3.87	3.16	4.00	3.07
	22			2.55	2.45	3.06	2.87	3.31	2.92	3.48	2.92	3.82	3.15	3.95	3.06
15.5	24			2.55	2.45	3.05	2.87	3.31	2.92	3.46	2.91	3.77	3.14	3.89	3.04
(m³/min)	26			2.55	2.45	3.04	2.86	3.28	2.91	3.42	2.90	3.71	3.09	3.84	3.03
	28	2.31	2.22	2.55	2.45	3.03	2.86	3.24	2.89	3.38	2.89	3.65	3.08	3.78	3.02
	30	2.31	2.22	2.54	2.44	3.00	2.85	3.21	2.88	3.34	2.88	3.60	3.06	3.72	3.00
	32	2.31	2.22	2.53	2.43	2.98	2.84	3.18	2.87	3.30	2.87	3.54	3.05	3.66	2.99
	34	2.31	2.22	2.53	2.43	2.97	2.83	3.14	2.85	3.25	2.84	3.47	3.03	3.59	2.97
	35	2.31	2.22	2.52	2.42	2.96	2.83	3.12	2.84	3.22	2.83	3.43	3.02	3.55	2.96
	36	2.31	2.22	2.52	2.42	2.94	2.82	3.10	2.84	3.19	2.82	3.37	3.00	3.48	2.93
	38	2.31	2.22	2.51	2.41	2.90	2.78	3.07	2.83	3.13	2.80	3.24	2.95	3.34	2.90
	39	2.31	2.22	2.51	2.41	2.87	2.76	3.06	2.83	3.10	2.79	3.18	2.94	3.27	2.87
	41	2.31	2.22	2.50	2.40	2.79	2.68	2.93	2.78	2.97	2.74	3.04	2.89	3.12	2.83
	43	2.31	2.22	2.49	2.39	2.70	2.59	2.81	2.70	2.84	2.70	2.90	2.78	2.97	2.79

Heat Mode

Air flow	Ambient air temp. DB	Ambient air temp. WB	Indoor air temp. 16 °CDB	18 °CDB	20 °CDB	22 °CDB	24 °CDB
Uhi	-19.8	-20	2.13	2.13	2.13	2.13	2.13
	-17.8	-18	2.27	2.27	2.27	2.27	2.27
	-15.7	-16	2.41	2.41	2.41	2.41	2.41
	-13.7	-14	2.55	2.55	2.55	2.55	2.55
	-11.7	-12	2.68	2.68	2.68	2.68	2.68
	-9.6	-10	2.82	2.82	2.82	2.82	2.82
	-7.5	-8	2.99	2.99	2.99	2.99	2.99
15.5	-5.5	-6	3.16	3.16	3.16	3.16	3.16
(m³/min)	-3.4	-4	3.28	3.27	3.27	3.23	3.20
	-1.3	-2	3.39	3.38	3.37	3.30	3.24
	0.8	0	3.57	3.52	3.47	3.34	3.22
	3.9	3	3.87	3.74	3.60	3.39	3.19
	7.0	6	4.23	3.96	3.68	3.42	3.16
	10.1	9	4.20	3.94	3.67	3.40	3.14
	13.2	12	4.18	3.91	3.64	3.38	3.11
	16.9	15.5	4.14	3.88	3.61	3.34	3.08

Air flow	Ambient air temp. (°CDB)	Indoor air temperature 21 °CDB 14 °CWB TC	21 °CDB 14 °CWB SHC	23 °CDB 16 °CWB TC	23 °CDB 16 °CWB SHC	26 °CDB 18 °CWB TC	26 °CDB 18 °CWB SHC	27 °CDB 19 °CWB TC	27 °CDB 19 °CWB SHC	28 °CDB 20 °CWB TC	28 °CDB 20 °CWB SHC	31 °CDB 22 °CWB TC	31 °CDB 22 °CWB SHC	33 °CDB 24 °CWB TC	33 °CDB 24 °CWB SHC
Hi	10			2.30	2.15	2.74	2.43	2.97	2.47	3.16	2.50	3.54	2.70	3.67	2.64
	12			2.30	2.15	2.74	2.43	2.97	2.47	3.15	2.49	3.52	2.70	3.66	2.64
	14			2.30	2.15	2.74	2.43	2.97	2.47	3.15	2.49	3.51	2.69	3.64	2.61
	16			2.30	2.15	2.74	2.43	2.97	2.47	3.14	2.48	3.50	2.69	3.63	2.61
	18			2.30	2.15	2.74	2.43	2.97	2.47	3.14	2.48	3.49	2.68	3.61	2.60
	20			2.30	2.15	2.74	2.43	2.97	2.47	3.14	2.48	3.47	2.68	3.59	2.60
	22			2.29	2.15	2.74	2.43	2.97	2.47	3.12	2.48	3.43	2.65	3.54	2.59
12	24			2.29	2.15	2.74	2.43	2.97	2.47	3.11	2.48	3.39	2.63	3.50	2.58
(m³/min)	26			2.29	2.15	2.73	2.42	2.94	2.46	3.07	2.46	3.33	2.62	3.44	2.56
	28	2.07	1.99	2.28	2.14	2.72	2.42	2.91	2.45	3.03	2.44	3.28	2.60	3.39	2.55
	30	2.07	1.99	2.28	2.14	2.70	2.41	2.88	2.43	3.00	2.43	3.23	2.59	3.34	2.54
	32	2.07	1.99	2.27	2.14	2.67	2.40	2.86	2.42	2.96	2.42	3.18	2.58	3.29	2.52
	34	2.07	1.99	2.27	2.14	2.66	2.39	2.82	2.41	2.92	2.40	3.11	2.56	3.22	2.50
	35	2.07	1.99	2.26	2.13	2.66	2.39	2.80	2.41	2.89	2.39	3.08	2.54	3.18	2.49
	36	2.07	1.99	2.26	2.13	2.64	2.38	2.79	2.40	2.86	2.38	3.02	2.52	3.12	2.47
	38	2.07	1.99	2.25	2.13	2.60	2.37	2.76	2.39	2.81	2.36	2.91	2.49	3.00	2.43
	39	2.07	1.99	2.25	2.13	2.58	2.36	2.74	2.38	2.78	2.35	2.86	2.46	2.94	2.41
	41	2.07	1.99	2.24	2.12	2.50	2.33	2.63	2.34	2.66	2.31	2.73	2.42	2.80	2.37
	43	2.07	1.99	2.24	2.12	2.43	2.29	2.52	2.28	2.55	2.25	2.60	2.38	2.66	2.33

Air flow	Ambient air temp. DB	Ambient air temp. WB	Indoor air temp. 16 °CDB	18 °CDB	20 °CDB	22 °CDB	24 °CDB
Hi	-19.8	-20	1.86	1.86	1.86	1.86	1.86
	-17.8	-18	1.98	1.98	1.98	1.98	1.98
	-15.7	-16	2.09	2.09	2.09	2.09	2.09
	-13.7	-14	2.21	2.21	2.21	2.21	2.21
	-11.7	-12	2.33	2.33	2.33	2.33	2.33
	-9.6	-10	2.45	2.45	2.45	2.45	2.45
	-7.5	-8	2.60	2.60	2.60	2.60	2.60
12	-5.5	-6	2.75	2.75	2.75	2.75	2.75
(m³/min)	-3.4	-4	2.85	2.84	2.84	2.81	2.78
	-1.3	-2	2.94	2.94	2.93	2.87	2.82
	0.8	0	3.10	3.06	3.02	2.91	2.80
	3.9	3	3.37	3.25	3.13	2.95	2.78
	7.0	6	3.68	3.44	3.20	2.98	2.75
	10.1	9	3.66	3.42	3.19	2.96	2.73
	13.2	12	3.63	3.40	3.17	2.94	2.70
	16.9	15.5	3.60	3.37	3.14	2.91	2.68

Air flow	Ambient air temp. (°CDB)	Indoor air temperature 21 °CDB 14 °CWB TC	21 °CDB 14 °CWB SHC	23 °CDB 16 °CWB TC	23 °CDB 16 °CWB SHC	26 °CDB 18 °CWB TC	26 °CDB 18 °CWB SHC	27 °CDB 19 °CWB TC	27 °CDB 19 °CWB SHC	28 °CDB 20 °CWB TC	28 °CDB 20 °CWB SHC	31 °CDB 22 °CWB TC	31 °CDB 22 °CWB SHC	33 °CDB 24 °CWB TC	33 °CDB 24 °CWB SHC
Me	10			2.21	2.06	2.64	2.32	2.85	2.36	3.03	2.38	3.40	2.59	3.53	2.53
	12			2.21	2.06	2.64	2.32	2.85	2.36	3.03	2.38	3.39	2.59	3.51	2.52
	14			2.21	2.06	2.64	2.32	2.85	2.36	3.03	2.38	3.37	2.57	3.50	2.52
	16			2.21	2.06	2.64	2.32	2.85	2.36	3.02	2.38	3.36	2.57	3.48	2.52
	18			2.21	2.06	2.64	2.32	2.85	2.36	3.02	2.38	3.35	2.57	3.47	2.51
	20			2.21	2.06	2.64	2.32	2.85	2.36	3.01	2.38	3.34	2.56	3.45	2.50
	22			2.20	2.05	2.63	2.32	2.85	2.36	3.00	2.37	3.29	2.55	3.41	2.49
11	24			2.20	2.05	2.63	2.32	2.85	2.36	2.99	2.37	3.25	2.53	3.36	2.47
(m³/min)	26			2.20	2.05	2.62	2.31	2.82	2.35	2.95	2.36	3.20	2.52	3.31	2.46
	28	1.99	1.91	2.20	2.05	2.61	2.31	2.80	2.34	2.91	2.34	3.15	2.50	3.25	2.44
	30	1.99	1.91	2.19	2.05	2.59	2.30	2.77	2.33	2.88	2.33	3.10	2.48	3.21	2.42
	32	1.99	1.91	2.18	2.05	2.57	2.29	2.74	2.32	2.85	2.32	3.05	2.46	3.16	2.41
	34	1.99	1.91	2.18	2.05	2.56	2.29	2.71	2.31	2.80	2.30	2.99	2.44	3.09	2.39
	35	1.99	1.91	2.17	2.04	2.56	2.29	2.69	2.29	2.78	2.29	2.96	2.43	3.06	2.38
	36	1.99	1.91	2.17	2.04	2.54	2.28	2.68	2.30	2.75	2.28	2.90	2.41	3.00	2.36
	38	1.99	1.91	2.17	2.04	2.50	2.27	2.65	2.29	2.70	2.26	2.80	2.38	2.88	2.32
	39	1.99	1.91	2.16	2.04	2.48	2.26	2.64	2.28	2.67	2.25	2.74	2.36	2.82	2.30
	41	1.99	1.91	2.16	2.04	2.40	2.23	2.53	2.24	2.56	2.21	2.62	2.32	2.69	2.25
	43	1.99	1.91	2.15	2.03	2.33	2.20	2.42	2.20	2.45	2.17	2.50	2.26	2.56	2.21

Air flow	Ambient air temp. DB	Ambient air temp. WB	Indoor air temp. 16 °CDB	18 °CDB	20 °CDB	22 °CDB	24 °CDB
Me	-19.8	-20	1.76	1.76	1.76	1.76	1.76
	-17.8	-18	1.88	1.88	1.88	1.88	1.88
	-15.7	-16	1.99	1.99	1.99	1.99	1.99
	-13.7	-14	2.10	2.10	2.10	2.10	2.10
	-11.7	-12	2.22	2.22	2.22	2.22	2.22
	-9.6	-10	2.33	2.33	2.33	2.33	2.33
	-7.5	-8	2.47	2.47	2.47	2.47	2.47
11	-5.5	-6	2.61	2.61	2.61	2.61	2.61
(m³/min)	-3.4	-4	2.71	2.70	2.70	2.67	2.64
	-1.3	-2	2.80	2.79	2.78	2.73	2.68
	0.8	0	2.95	2.91	2.87	2.76	2.66
	3.9	3	3.20	3.09	2.97	2.80	2.64
	7.0	6	3.50	3.27	3.04	2.83	2.61
	10.1	9	3.47	3.25	3.03	2.81	2.59
	13.2	12	3.45	3.23	3.01	2.79	2.57
	16.9	15.5	3.42	3.20	2.98	2.76	2.54

Air flow	Ambient air temp. (°CDB)	Indoor air temperature 21 °CDB 14 °CWB TC	21 °CDB 14 °CWB SHC	23 °CDB 16 °CWB TC	23 °CDB 16 °CWB SHC	26 °CDB 18 °CWB TC	26 °CDB 18 °CWB SHC	27 °CDB 19 °CWB TC	27 °CDB 19 °CWB SHC	28 °CDB 20 °CWB TC	28 °CDB 20 °CWB SHC	31 °CDB 22 °CWB TC	31 °CDB 22 °CWB SHC	33 °CDB 24 °CWB TC	33 °CDB 24 °CWB SHC
Lo	10			2.11	1.93	2.52	2.18	2.72	2.21	2.90	2.24	3.25	2.43	3.37	2.37
	12			2.11	1.93	2.52	2.18	2.72	2.21	2.89	2.23	3.23	2.41	3.36	2.37
	14			2.11	1.93	2.52	2.18	2.72	2.21	2.89	2.23	3.22	2.41	3.34	2.36
	16			2.11	1.93	2.52	2.18	2.72	2.21	2.89	2.23	3.21	2.41	3.33	2.35
	18			2.11	1.93	2.52	2.18	2.72	2.21	2.88	2.23	3.20	2.41	3.31	2.35
	20			2.11	1.93	2.52	2.18	2.72	2.21	2.88	2.23	3.19	2.40	3.30	2.34
	22			2.10	1.92	2.52	2.18	2.72	2.21	2.87	2.23	3.15	2.39	3.25	2.33
10	24			2.10	1.92	2.52	2.18	2.72	2.21	2.85	2.22	3.11	2.37	3.21	2.31
(m³/min)	26			2.10	1.92	2.50	2.16	2.70	2.20	2.82	2.20	3.06	2.35	3.16	2.30
	28	1.90	1.82	2.10	1.92	2.49	2.16	2.67	2.19	2.78	2.19	3.01	2.34	3.11	2.28
	30	1.90	1.82	2.09	1.92	2.47	2.15	2.65	2.18	2.75	2.18	2.96	2.32	3.06	2.27
	32	1.90	1.82	2.09	1.92	2.45	2.15	2.62	2.17	2.72	2.17	2.92	2.31	3.02	2.25
	34	1.90	1.82	2.08	1.91	2.45	2.15	2.59	2.16	2.68	2.15	2.86	2.28	2.95	2.23
	35	1.90	1.82	2.08	1.91	2.44	2.14	2.57	2.16	2.66	2.15	2.83	2.27	2.92	2.23
	36	1.90	1.82	2.07	1.91	2.42	2.14	2.56	2.15	2.63	2.14	2.77	2.26	2.87	2.21
	38	1.90	1.82	2.07	1.91	2.39	2.12	2.53	2.14	2.58	2.12	2.67	2.22	2.75	2.17
	39	1.90	1.82	2.07	1.91	2.37	2.11	2.52	2.13	2.55	2.11	2.62	2.20	2.70	2.14
	41	1.90	1.82	2.06	1.91	2.30	2.09	2.42	2.09	2.45	2.07	2.51	2.15	2.57	2.10
	43	1.90	1.82	2.05	1.90	2.23	2.06	2.31	2.05	2.34	2.03	2.39	2.12	2.44	2.07

Air flow	Ambient air temp. DB	Ambient air temp. WB	Indoor air temp. 16 °CDB	18 °CDB	20 °CDB	22 °CDB	24 °CDB
Lo	-19.8	-20	1.67	1.67	1.67	1.67	1.67
	-17.8	-18	1.78	1.78	1.78	1.78	1.78
	-15.7	-16	1.89	1.89	1.89	1.89	1.89
	-13.7	-14	1.99	1.99	1.99	1.99	1.99
	-11.7	-12	2.10	2.10	2.10	2.10	2.10
	-9.6	-10	2.21	2.21	2.21	2.21	2.21
	-7.5	-8	2.34	2.34	2.34	2.34	2.34
10	-5.5	-6	2.48	2.48	2.48	2.48	2.48
(m³/min)	-3.4	-4	2.56	2.56	2.56	2.53	2.51
	-1.3	-2	2.65	2.64	2.64	2.58	2.53
	0.8	0	2.79	2.75	2.71	2.62	2.52
	3.9	3	3.03	2.92	2.82	2.66	2.50
	7.0	6	3.31	3.10	2.88	2.68	2.48
	10.1	9	3.29	3.08	2.87	2.66	2.46
	13.2	12	3.27	3.06	2.85	2.64	2.43
	16.9	15.5	3.24	3.03	2.83	2.62	2.41

Note(1) This data shows average statuses out of those possible to occur in the system control.
(Depending on controls, there may be ranges where the operation is not conducted continuously.)
(2) Symbols are as follows
TC :Total cooling capacity(kW)
SHC :Sensible heat capacity(kW)

Cool mode	Uhi	Hi	Me	Lo
Air flow	15.50	12	11	10
TC	3.12	2.80	2.69	2.57
SHF	0.91	0.86	0.85	0.84

Heat mode	Uhi	Hi	Me	Lo
Air flow	15.5	12	11	10
Heating capacity	3.68	3.20	3.04	2.88

Model **FDUM36KXE6** Cool Mode

Air flow	Ambient air temp. (℃DB)	Indoor air temperature 21 ℃CDB 14 ℃CWB TC	SHC	23 ℃CDB 16 ℃CWB TC	SHC	26 ℃CDB 18 ℃CWB TC	SHC	27 ℃CDB 19 ℃CWB TC	SHC	28 ℃CDB 20 ℃CWB TC	SHC	31 ℃CDB 22 ℃CWB TC	SHC	33 ℃CDB 24 ℃CWB TC	SHC
Uhi	10			3.25	2.92	3.89	3.29	4.21	3.36	4.48	3.39	5.02	3.68	5.21	3.57
	12			3.25	2.92	3.89	3.29	4.21	3.36	4.47	3.39	5.00	3.67	5.18	3.56
	14			3.25	2.92	3.89	3.29	4.21	3.36	4.47	3.39	4.98	3.66	5.16	3.56
	16			3.25	2.92	3.89	3.29	4.21	3.36	4.46	3.39	4.96	3.63	5.14	3.55
	18			3.25	2.92	3.89	3.29	4.21	3.36	4.45	3.38	4.94	3.63	5.12	3.54
	20			3.25	2.92	3.89	3.29	4.21	3.36	4.45	3.38	4.92	3.62	5.10	3.54
	22			3.25	2.92	3.89	3.29	4.21	3.36	4.43	3.38	4.86	3.60	5.03	3.52
14	24			3.25	2.92	3.89	3.29	4.21	3.36	4.41	3.36	4.80	3.58	4.96	3.50
(m^3/min)	26			3.24	2.91	3.87	3.28	4.17	3.34	4.35	3.34	4.72	3.56	4.88	3.48
	28	2.94	2.82	3.24	2.91	3.85	3.28	4.13	3.32	4.30	3.33	4.65	3.54	4.80	3.46
	30	2.94	2.82	3.23	2.91	3.82	3.26	4.09	3.31	4.25	3.30	4.58	3.52	4.73	3.43
	32	2.94	2.82	3.22	2.90	3.79	3.25	4.05	3.29	4.20	3.29	4.51	3.49	4.66	3.41
	34	2.94	2.82	3.21	2.90	3.78	3.25	4.00	3.28	4.13	3.26	4.41	3.46	4.56	3.38
	35	2.94	2.82	3.21	2.90	3.77	3.25	3.97	3.26	4.10	3.25	4.36	3.44	4.52	3.36
	36	2.94	2.82	3.20	2.89	3.74	3.24	3.95	3.25	4.06	3.23	4.29	3.41	4.43	3.34
	38	2.94	2.82	3.20	2.89	3.69	3.21	3.91	3.24	3.98	3.20	4.13	3.36	4.25	3.28
	39	2.94	2.82	3.19	2.89	3.66	3.20	3.89	3.23	3.94	3.19	4.05	3.33	4.16	3.25
	41	2.94	2.82	3.18	2.88	3.55	3.16	3.73	3.17	3.78	3.13	3.87	3.27	3.97	3.19
	43	2.94	2.82	3.17	2.88	3.44	3.11	3.57	3.11	3.61	3.07	3.69	3.21	3.77	3.13

Heat Mode

Air flow	Ambient air temp. DB	WB	Indoor air temp. 16 ℃CDB	18 ℃CDB	20 ℃CDB	22 ℃CDB	24 ℃CDB
Uhi	-19.8	-20	2.59	2.59	2.59	2.59	2.59
	-17.8	-18	2.75	2.75	2.75	2.75	2.75
	-15.7	-16	2.92	2.92	2.92	2.92	2.92
	-13.7	-14	3.09	3.09	3.09	3.09	3.09
	-11.7	-12	3.25	3.25	3.25	3.25	3.25
	-9.6	-10	3.42	3.42	3.42	3.42	3.42
	-7.5	-8	3.63	3.63	3.63	3.63	3.63
14	-5.5	-6	3.84	3.84	3.84	3.84	3.84
(m^3/min)	-3.4	-4	3.97	3.96	3.96	3.92	3.88
	-1.3	-2	4.10	4.09	4.08	4.00	3.92
	0.8	0	4.33	4.26	4.20	4.05	3.90
	3.9	3	4.69	4.53	4.36	4.11	3.87
	7.0	6	5.13	4.79	4.46	4.15	3.84
	10.1	9	5.10	4.77	4.44	4.12	3.80
	13.2	12	5.06	4.74	4.42	4.09	3.77
	16.9	15.5	5.02	4.70	4.38	4.05	3.73

Air flow	Ambient air temp. (℃DB)	Indoor air temperature 21 ℃CDB 14 ℃CWB TC	SHC	23 ℃CDB 16 ℃CWB TC	SHC	26 ℃CDB 18 ℃CWB TC	SHC	27 ℃CDB 19 ℃CWB TC	SHC	28 ℃CDB 20 ℃CWB TC	SHC	31 ℃CDB 22 ℃CWB TC	SHC	33 ℃CDB 24 ℃CWB TC	SHC
Hi	10			2.95	2.62	3.53	2.95	3.82	3.02	4.06	3.04	4.55	3.29	4.72	3.22
	12			2.95	2.62	3.53	2.95	3.82	3.02	4.05	3.04	4.53	3.29	4.70	3.21
	14			2.95	2.62	3.53	2.95	3.82	3.02	4.05	3.04	4.51	3.28	4.68	3.21
	16			2.95	2.62	3.53	2.95	3.82	3.02	4.04	3.03	4.50	3.28	4.66	3.19
	18			2.95	2.62	3.53	2.95	3.82	3.02	4.04	3.03	4.48	3.27	4.64	3.19
	20			2.95	2.62	3.53	2.95	3.82	3.02	4.03	3.03	4.47	3.27	4.62	3.18
	22			2.95	2.62	3.53	2.95	3.82	3.02	4.01	3.02	4.41	3.24	4.56	3.17
12	24			2.94	2.61	3.52	2.95	3.82	3.02	3.99	3.02	4.35	3.22	4.49	3.14
(m^3/min)	26			2.94	2.61	3.51	2.95	3.78	3.00	3.95	3.00	4.28	3.20	4.43	3.12
	28	2.66	2.55	2.94	2.61	3.49	2.94	3.74	2.98	3.90	2.99	4.22	3.17	4.36	3.10
	30	2.66	2.55	2.93	2.61	3.47	2.93	3.71	2.97	3.86	2.97	4.15	3.15	4.29	3.07
	32	2.66	2.55	2.92	2.61	3.44	2.92	3.67	2.96	3.81	2.95	4.09	3.13	4.23	3.06
	34	2.66	2.55	2.91	2.60	3.43	2.92	3.62	2.93	3.75	2.93	4.00	3.10	4.14	3.03
	35	2.66	2.55	2.91	2.60	3.42	2.91	3.60	2.92	3.72	2.91	3.96	3.09	4.09	3.01
	36	2.66	2.55	2.91	2.60	3.39	2.90	3.58	2.92	3.68	2.90	3.89	3.06	4.02	2.99
	38	2.66	2.55	2.90	2.60	3.34	2.88	3.55	2.91	3.61	2.87	3.74	3.01	3.86	2.94
	39	2.66	2.55	2.89	2.59	3.32	2.87	3.53	2.90	3.58	2.86	3.67	2.98	3.78	2.91
	41	2.66	2.55	2.88	2.58	3.22	2.83	3.38	2.84	3.43	2.81	3.51	2.91	3.60	2.84
	43	2.66	2.55	2.87	2.58	3.12	2.79	3.24	2.78	3.28	2.75	3.35	2.86	3.42	2.79

Air flow	Ambient air temp. DB	WB	Indoor air temp. 16 ℃CDB	18 ℃CDB	20 ℃CDB	22 ℃CDB	24 ℃CDB
Hi	-19.8	-20	2.32	2.32	2.32	2.32	2.32
	-17.8	-18	2.47	2.47	2.47	2.47	2.47
	-15.7	-16	2.62	2.62	2.62	2.62	2.62
	-13.7	-14	2.77	2.77	2.77	2.77	2.77
	-11.7	-12	2.92	2.92	2.92	2.92	2.92
	-9.6	-10	3.07	3.07	3.07	3.07	3.07
	-7.5	-8	3.25	3.25	3.25	3.25	3.25
12	-5.5	-6	3.44	3.44	3.44	3.44	3.44
(m^3/min)	-3.4	-4	3.56	3.56	3.55	3.52	3.48
	-1.3	-2	3.68	3.67	3.66	3.59	3.52
	0.8	0	3.88	3.83	3.77	3.64	3.50
	3.9	3	4.21	4.06	3.91	3.69	3.47
	7.0	6	4.60	4.30	4.00	3.72	3.44
	10.1	9	4.57	4.28	3.99	3.70	3.41
	13.2	12	4.54	4.25	3.96	3.67	3.38
	16.9	15.5	4.51	4.22	3.93	3.64	3.35

Air flow	Ambient air temp. (℃DB)	Indoor air temperature 21 ℃CDB 14 ℃CWB TC	SHC	23 ℃CDB 16 ℃CWB TC	SHC	26 ℃CDB 18 ℃CWB TC	SHC	27 ℃CDB 19 ℃CWB TC	SHC	28 ℃CDB 20 ℃CWB TC	SHC	31 ℃CDB 22 ℃CWB TC	SHC	33 ℃CDB 24 ℃CWB TC	SHC
Me	10			2.79	2.43	3.33	2.75	3.60	2.80	3.83	2.83	4.30	3.07	4.46	3.00
	12			2.79	2.43	3.33	2.75	3.60	2.80	3.83	2.83	4.28	3.06	4.44	2.99
	14			2.79	2.43	3.33	2.75	3.60	2.80	3.82	2.82	4.26	3.05	4.42	2.98
	16			2.79	2.43	3.33	2.75	3.60	2.80	3.82	2.82	4.25	3.05	4.40	2.97
	18			2.79	2.43	3.33	2.75	3.60	2.80	3.81	2.82	4.23	3.04	4.38	2.97
	20			2.79	2.43	3.33	2.75	3.60	2.80	3.81	2.82	4.22	3.04	4.36	2.96
	22			2.78	2.43	3.33	2.75	3.60	2.80	3.79	2.81	4.16	3.02	4.30	2.94
11	24			2.78	2.43	3.33	2.75	3.60	2.80	3.77	2.80	4.11	3.00	4.24	2.92
(m^3/min)	26			2.78	2.43	3.31	2.74	3.57	2.79	3.73	2.79	4.05	2.98	4.18	2.90
	28	2.52	2.40	2.77	2.43	3.30	2.74	3.54	2.78	3.68	2.77	3.98	2.95	4.11	2.88
	30	2.52	2.40	2.77	2.43	3.27	2.73	3.50	2.76	3.64	2.76	3.92	2.93	4.05	2.86
	32	2.52	2.40	2.76	2.42	3.25	2.71	3.47	2.75	3.60	2.75	3.86	2.91	3.99	2.84
	34	2.52	2.40	2.75	2.42	3.24	2.71	3.42	2.73	3.54	2.72	3.78	2.88	3.91	2.81
	35	2.52	2.40	2.75	2.42	3.23	2.70	3.40	2.72	3.51	2.71	3.74	2.86	3.87	2.80
	36	2.52	2.40	2.74	2.41	3.21	2.70	3.38	2.71	3.48	2.70	3.67	2.84	3.79	2.78
	38	2.52	2.40	2.74	2.41	3.16	2.68	3.35	2.70	3.41	2.67	3.54	2.79	3.64	2.73
	39	2.52	2.40	2.73	2.41	3.13	2.67	3.33	2.69	3.38	2.66	3.47	2.77	3.57	2.70
	41	2.52	2.40	2.72	2.40	3.04	2.63	3.20	2.64	3.24	2.60	3.31	2.72	3.40	2.63
	43	2.52	2.40	2.71	2.40	2.94	2.59	3.06	2.59	3.09	2.55	3.16	2.65	3.23	2.58

Air flow	Ambient air temp. DB	WB	Indoor air temp. 16 ℃CDB	18 ℃CDB	20 ℃CDB	22 ℃CDB	24 ℃CDB
Me	-19.8	-20	2.18	2.18	2.18	2.18	2.18
	-17.8	-18	2.32	2.32	2.32	2.32	2.32
	-15.7	-16	2.46	2.46	2.46	2.46	2.46
	-13.7	-14	2.60	2.60	2.60	2.60	2.60
	-11.7	-12	2.74	2.74	2.74	2.74	2.74
	-9.6	-10	2.88	2.88	2.88	2.88	2.88
	-7.5	-8	3.05	3.05	3.05	3.05	3.05
11	-5.5	-6	3.23	3.23	3.23	3.23	3.23
(m^3/min)	-3.4	-4	3.34	3.33	3.33	3.30	3.26
	-1.3	-2	3.45	3.44	3.43	3.37	3.30
	0.8	0	3.64	3.59	3.53	3.41	3.28
	3.9	3	3.95	3.81	3.67	3.46	3.25
	7.0	6	4.31	4.03	3.75	3.49	3.23
	10.1	9	4.28	4.01	3.74	3.47	3.20
	13.2	12	4.26	3.98	3.71	3.44	3.17
	16.9	15.5	4.22	3.95	3.68	3.41	3.14

Air flow	Ambient air temp. (℃DB)	Indoor air temperature 21 ℃CDB 14 ℃CWB TC	SHC	23 ℃CDB 16 ℃CWB TC	SHC	26 ℃CDB 18 ℃CWB TC	SHC	27 ℃CDB 19 ℃CWB TC	SHC	28 ℃CDB 20 ℃CWB TC	SHC	31 ℃CDB 22 ℃CWB TC	SHC	33 ℃CDB 24 ℃CWB TC	SHC
Lo	10			2.61	2.26	3.13	2.56	3.38	2.60	3.60	2.64	4.03	2.85	4.18	2.78
	12			2.61	2.26	3.13	2.56	3.38	2.60	3.59	2.63	4.02	2.85	4.17	2.77
	14			2.61	2.26	3.13	2.56	3.38	2.60	3.59	2.63	4.00	2.84	4.15	2.77
	16			2.61	2.26	3.13	2.56	3.38	2.60	3.58	2.63	3.99	2.84	4.13	2.76
	18			2.61	2.26	3.13	2.56	3.38	2.60	3.58	2.63	3.97	2.83	4.11	2.76
	20			2.61	2.26	3.13	2.56	3.38	2.60	3.57	2.62	3.96	2.83	4.09	2.75
	22			2.61	2.26	3.12	2.55	3.38	2.60	3.56	2.62	3.91	2.80	4.04	2.74
10	24			2.61	2.26	3.12	2.55	3.38	2.60	3.54	2.61	3.86	2.79	3.98	2.71
(m^3/min)	26			2.61	2.26	3.11	2.55	3.35	2.59	3.50	2.59	3.80	2.76	3.92	2.69
	28	2.36	2.23	2.60	2.25	3.09	2.54	3.32	2.58	3.46	2.58	3.74	2.74	3.86	2.67
	30	2.36	2.23	2.60	2.25	3.07	2.53	3.29	2.57	3.42	2.57	3.68	2.72	3.80	2.65
	32	2.36	2.23	2.59	2.25	3.05	2.52	3.25	2.55	3.38	2.55	3.62	2.70	3.74	2.64
	34	2.36	2.23	2.58	2.25	3.04	2.52	3.21	2.54	3.32	2.53	3.54	2.67	3.67	2.61
	35	2.36	2.23	2.58	2.25	3.03	2.51	3.19	2.52	3.30	2.52	3.51	2.66	3.63	2.60
	36	2.36	2.23	2.57	2.24	3.01	2.50	3.17	2.52	3.26	2.51	3.44	2.64	3.56	2.57
	38	2.36	2.23	2.57	2.24	2.96	2.49	3.14	2.51	3.20	2.48	3.32	2.59	3.42	2.51
	39	2.36	2.23	2.56	2.24	2.94	2.48	3.13	2.50	3.17	2.47	3.25	2.57	3.35	2.49
	41	2.36	2.23	2.56	2.24	2.85	2.44	3.00	2.46	3.04	2.42	3.11	2.51	3.19	2.45
	43	2.36	2.23	2.55	2.23	2.76	2.40	2.87	2.40	2.90	2.37	2.97	2.47	3.03	2.40

Air flow	Ambient air temp. DB	WB	Indoor air temp. 16 ℃CDB	18 ℃CDB	20 ℃CDB	22 ℃CDB	24 ℃CDB
Lo	-19.8	-20	2.03	2.03	2.03	2.03	2.03
	-17.8	-18	2.16	2.16	2.16	2.16	2.16
	-15.7	-16	2.29	2.29	2.29	2.29	2.29
	-13.7	-14	2.42	2.42	2.42	2.42	2.42
	-11.7	-12	2.55	2.55	2.55	2.55	2.55
	-9.6	-10	2.68	2.68	2.68	2.68	2.68
	-7.5	-8	2.85	2.85	2.85	2.85	2.85
10	-5.5	-6	3.01	3.01	3.01	3.01	3.01
(m^3/min)	-3.4	-4	3.12	3.11	3.11	3.08	3.05
	-1.3	-2	3.22	3.21	3.20	3.14	3.08
	0.8	0	3.40	3.35	3.30	3.18	3.06
	3.9	3	3.68	3.55	3.42	3.23	3.04
	7.0	6	4.03	3.76	3.50	3.26	3.01
	10.1	9	4.00	3.74	3.49	3.24	2.98
	13.2	12	3.97	3.72	3.47	3.21	2.96
	16.9	15.5	3.94	3.69	3.43	3.18	2.93

Note(1) This data shows average statuses out of those possible to occur in the system control.
(Depending on controls, there may be ranges where the operation is not conducted continuously.)
(2) Symbols are as follows
TC :Total cooling capacity(kW)
SHC :Sensible heat capacity(kW)

Cool mode	Uhi	Hi	Me	Lo
Air flow	14.00	12	11	10
TC	3.97	3.60	3.40	3.19
SHF	0.82	0.81	0.80	0.79

Heat mode	Uhi	Hi	Me	Lo
Air flow	14	12	11	10
Heating capacity	4.46	4.00	3.75	3.50

Model **FDUM45KXE6** Cool Mode

Air flow	Ambient air temp. (℃DB)	Indoor air temperature 21 ℃DB 14 ℃WB TC	21 ℃DB 14 ℃WB SHC	23 ℃DB 16 ℃WB TC	23 ℃DB 16 ℃WB SHC	26 ℃DB 18 ℃WB TC	26 ℃DB 18 ℃WB SHC	27 ℃DB 19 ℃WB TC	27 ℃DB 19 ℃WB SHC	28 ℃DB 20 ℃WB TC	28 ℃DB 20 ℃WB SHC	31 ℃DB 22 ℃WB TC	31 ℃DB 22 ℃WB SHC	33 ℃DB 24 ℃WB TC	33 ℃DB 24 ℃WB SHC
Uhi	10			3.92	3.39	4.68	3.83	5.07	3.90	5.39	3.94	6.04	4.27	6.27	4.17
	12			3.92	3.39	4.68	3.83	5.07	3.90	5.38	3.94	6.02	4.26	6.24	4.16
	14			3.92	3.39	4.68	3.83	5.07	3.90	5.38	3.94	5.99	4.25	6.22	4.15
	16			3.92	3.39	4.68	3.83	5.07	3.90	5.37	3.94	5.97	4.24	6.19	4.12
	18			3.92	3.39	4.68	3.83	5.07	3.90	5.36	3.93	5.95	4.23	6.16	4.11
	20			3.92	3.39	4.68	3.83	5.07	3.90	5.35	3.93	5.93	4.23	6.13	4.10
	22			3.91	3.39	4.68	3.83	5.07	3.90	5.33	3.92	5.85	4.20	6.05	4.08
15.5	24			3.91	3.39	4.68	3.83	5.07	3.90	5.30	3.91	5.78	4.16	5.97	4.05
(m³/min)	26			3.90	3.37	4.66	3.82	5.02	3.88	5.24	3.89	5.69	4.13	5.88	4.03
	28	3.54	3.34	3.90	3.37	4.64	3.80	4.97	3.86	5.18	3.86	5.60	4.10	5.78	4.00
	30	3.54	3.34	3.89	3.37	4.60	3.79	4.92	3.84	5.12	3.84	5.51	4.07	5.70	3.98
	32	3.54	3.34	3.88	3.37	4.56	3.77	4.88	3.82	5.06	3.82	5.43	4.05	5.61	3.94
	34	3.54	3.34	3.87	3.36	4.55	3.77	4.81	3.80	4.98	3.79	5.31	4.00	5.49	3.91
	35	3.54	3.34	3.86	3.36	4.54	3.77	4.78	3.78	4.94	3.77	5.25	3.98	5.44	3.89
	36	3.54	3.34	3.86	3.36	4.51	3.75	4.76	3.78	4.89	3.76	5.16	3.95	5.33	3.85
	38	3.54	3.34	3.85	3.35	4.44	3.72	4.71	3.76	4.80	3.72	4.97	3.89	5.12	3.79
	39	3.54	3.34	3.84	3.35	4.40	3.71	4.68	3.75	4.75	3.70	4.88	3.85	5.01	3.75
	41	3.54	3.34	3.83	3.35	4.27	3.65	4.49	3.67	4.55	3.62	4.66	3.77	4.78	3.68
	43	3.54	3.34	3.82	3.34	4.14	3.59	4.30	3.58	4.35	3.53	4.44	3.70	4.54	3.61

Heat Mode

Air flow	Ambient air temp. DB	Ambient air temp. WB	Indoor air temp. 16 ℃CDB	18 ℃CDB	20 ℃CDB	22 ℃CDB	24 ℃CDB
Uhi	-19.8	-20	3.11	3.11	3.11	3.11	3.11
	-17.8	-18	3.31	3.31	3.31	3.31	3.31
	-15.7	-16	3.51	3.51	3.51	3.51	3.51
	-13.7	-14	3.71	3.71	3.71	3.71	3.71
	-11.7	-12	3.91	3.91	3.91	3.91	3.91
	-9.6	-10	4.11	4.11	4.11	4.11	4.11
	-7.5	-8	4.36	4.36	4.36	4.36	4.36
15.5	-5.5	-6	4.61	4.61	4.61	4.61	4.61
(m³/min)	-3.4	-4	4.77	4.76	4.76	4.71	4.66
	-1.3	-2	4.93	4.92	4.90	4.81	4.72
	0.8	0	5.20	5.13	5.05	4.87	4.69
	3.9	3	5.64	5.44	5.24	4.94	4.65
	7.0	6	6.16	5.76	5.36	4.98	4.61
	10.1	9	6.12	5.73	5.34	4.95	4.57
	13.2	12	6.08	5.70	5.31	4.92	4.53
	16.9	15.5	6.04	5.65	5.26	4.87	4.48

Air flow	Ambient air temp. (℃DB)	Indoor air temperature 21 ℃DB 14 ℃WB TC	21 ℃DB 14 ℃WB SHC	23 ℃DB 16 ℃WB TC	23 ℃DB 16 ℃WB SHC	26 ℃DB 18 ℃WB TC	26 ℃DB 18 ℃WB SHC	27 ℃DB 19 ℃WB TC	27 ℃DB 19 ℃WB SHC	28 ℃DB 20 ℃WB TC	28 ℃DB 20 ℃WB SHC	31 ℃DB 22 ℃WB TC	31 ℃DB 22 ℃WB SHC	33 ℃DB 24 ℃WB TC	33 ℃DB 24 ℃WB SHC
Hi	10			3.69	3.14	4.41	3.55	4.77	3.62	5.07	3.67	5.68	3.96	5.90	3.85
	12			3.69	3.14	4.41	3.55	4.77	3.62	5.07	3.67	5.66	3.95	5.88	3.84
	14			3.69	3.14	4.41	3.55	4.77	3.62	5.06	3.66	5.64	3.95	5.85	3.83
	16			3.69	3.14	4.41	3.55	4.77	3.62	5.05	3.66	5.62	3.94	5.83	3.83
	18			3.69	3.14	4.41	3.55	4.77	3.62	5.05	3.66	5.60	3.91	5.80	3.82
	20			3.69	3.14	4.41	3.55	4.77	3.62	5.04	3.65	5.58	3.91	5.78	3.81
	22			3.68	3.14	4.41	3.55	4.77	3.62	5.02	3.64	5.51	3.88	5.70	3.79
14	24			3.68	3.14	4.41	3.55	4.77	3.62	4.99	3.63	5.44	3.86	5.62	3.77
(m³/min)	26			3.68	3.14	4.39	3.54	4.73	3.60	4.93	3.61	5.35	3.83	5.53	3.74
	28	3.33	3.10	3.67	3.14	4.37	3.53	4.68	3.59	4.88	3.59	5.27	3.81	5.44	3.71
	30	3.33	3.10	3.66	3.13	4.33	3.51	4.64	3.57	4.82	3.56	5.19	3.78	5.36	3.68
	32	3.33	3.10	3.65	3.12	4.30	3.49	4.59	3.55	4.76	3.54	5.11	3.75	5.28	3.66
	34	3.33	3.10	3.64	3.12	4.28	3.48	4.53	3.52	4.69	3.51	5.00	3.71	5.17	3.62
	35	3.33	3.10	3.64	3.12	4.28	3.48	4.50	3.51	4.65	3.50	4.95	3.69	5.12	3.61
	36	3.33	3.10	3.63	3.11	4.24	3.46	4.48	3.51	4.60	3.48	4.86	3.66	5.02	3.57
	38	3.33	3.10	3.62	3.11	4.18	3.44	4.43	3.48	4.52	3.43	4.68	3.60	4.82	3.50
	39	3.33	3.10	3.62	3.11	4.15	3.43	4.41	3.46	4.47	3.41	4.59	3.56	4.72	3.48
	41	3.33	3.10	3.61	3.10	4.02	3.38	4.23	3.40	4.28	3.35	4.39	3.49	4.50	3.40
	43	3.33	3.10	3.59	3.10	3.90	3.34	4.05	3.33	4.09	3.29	4.18	3.42	4.28	3.33

Air flow	Ambient air temp. DB	Ambient air temp. WB	Indoor air temp. 16 ℃CDB	18 ℃CDB	20 ℃CDB	22 ℃CDB	24 ℃CDB
Hi	-19.8	-20	2.90	2.90	2.90	2.90	2.90
	-17.8	-18	3.09	3.09	3.09	3.09	3.09
	-15.7	-16	3.27	3.27	3.27	3.27	3.27
	-13.7	-14	3.46	3.46	3.46	3.46	3.46
	-11.7	-12	3.65	3.65	3.65	3.65	3.65
	-9.6	-10	3.83	3.83	3.83	3.83	3.83
	-7.5	-8	4.07	4.07	4.07	4.07	4.07
14	-5.5	-6	4.30	4.30	4.30	4.30	4.30
(m³/min)	-3.4	-4	4.45	4.44	4.44	4.39	4.35
	-1.3	-2	4.60	4.59	4.58	4.49	4.40
	0.8	0	4.85	4.78	4.71	4.54	4.38
	3.9	3	5.26	5.08	4.89	4.61	4.34
	7.0	6	5.75	5.38	5.00	4.65	4.30
	10.1	9	5.71	5.35	4.98	4.62	4.26
	13.2	12	5.68	5.31	4.95	4.59	4.23
	16.9	15.5	5.63	5.27	4.91	4.54	4.18

Air flow	Ambient air temp. (℃DB)	Indoor air temperature 21 ℃DB 14 ℃WB TC	21 ℃DB 14 ℃WB SHC	23 ℃DB 16 ℃WB TC	23 ℃DB 16 ℃WB SHC	26 ℃DB 18 ℃WB TC	26 ℃DB 18 ℃WB SHC	27 ℃DB 19 ℃WB TC	27 ℃DB 19 ℃WB SHC	28 ℃DB 20 ℃WB TC	28 ℃DB 20 ℃WB SHC	31 ℃DB 22 ℃WB TC	31 ℃DB 22 ℃WB SHC	33 ℃DB 24 ℃WB TC	33 ℃DB 24 ℃WB SHC
Me	10			3.34	2.77	4.00	3.14	4.32	3.22	4.60	3.26	5.15	3.52	5.35	3.42
	12			3.34	2.77	4.00	3.14	4.32	3.22	4.60	3.26	5.14	3.52	5.33	3.41
	14			3.34	2.77	4.00	3.14	4.32	3.22	4.59	3.25	5.12	3.51	5.31	3.41
	16			3.34	2.77	4.00	3.14	4.32	3.22	4.58	3.25	5.10	3.48	5.28	3.40
	18			3.34	2.77	4.00	3.14	4.32	3.22	4.58	3.25	5.08	3.48	5.26	3.39
	20			3.34	2.77	4.00	3.14	4.32	3.22	4.57	3.25	5.06	3.47	5.24	3.39
	22			3.34	2.77	4.00	3.14	4.32	3.22	4.55	3.24	5.00	3.45	5.16	3.36
12	24			3.33	2.77	3.99	3.14	4.32	3.22	4.53	3.23	4.93	3.43	5.09	3.34
(m³/min)	26			3.33	2.77	3.98	3.13	4.28	3.20	4.47	3.20	4.86	3.41	5.02	3.32
	28	3.02	2.74	3.33	2.77	3.96	3.13	4.24	3.18	4.42	3.19	4.78	3.38	4.94	3.29
	30	3.02	2.74	3.32	2.77	3.93	3.12	4.20	3.15	4.37	3.17	4.70	3.35	4.86	3.27
	32	3.02	2.74	3.31	2.76	3.90	3.10	4.16	3.14	4.32	3.13	4.63	3.33	4.79	3.24
	34	3.02	2.74	3.30	2.76	3.88	3.10	4.11	3.12	4.25	3.11	4.53	3.29	4.69	3.21
	35	3.02	2.74	3.30	2.76	3.88	3.10	4.08	3.10	4.21	3.09	4.48	3.27	4.64	3.19
	36	3.02	2.74	3.29	2.75	3.85	3.09	4.06	3.10	4.17	3.08	4.40	3.24	4.55	3.16
	38	3.02	2.74	3.28	2.75	3.79	3.06	4.02	3.09	4.09	3.05	4.24	3.18	4.37	3.10
	39	3.02	2.74	3.28	2.75	3.76	3.05	4.00	3.08	4.05	3.04	4.16	3.16	4.28	3.07
	41	3.02	2.74	3.27	2.75	3.65	3.00	3.84	3.02	3.88	2.97	3.98	3.09	4.08	3.01
	43	3.02	2.74	3.26	2.74	3.53	2.95	3.67	2.96	3.71	2.91	3.79	3.03	3.88	2.94

Air flow	Ambient air temp. DB	Ambient air temp. WB	Indoor air temp. 16 ℃CDB	18 ℃CDB	20 ℃CDB	22 ℃CDB	24 ℃CDB
Me	-19.8	-20	2.60	2.60	2.60	2.60	2.60
	-17.8	-18	2.77	2.77	2.77	2.77	2.77
	-15.7	-16	2.94	2.94	2.94	2.94	2.94
	-13.7	-14	3.11	3.11	3.11	3.11	3.11
	-11.7	-12	3.27	3.27	3.27	3.27	3.27
	-9.6	-10	3.44	3.44	3.44	3.44	3.44
	-7.5	-8	3.65	3.65	3.65	3.65	3.65
12	-5.5	-6	3.86	3.86	3.86	3.86	3.86
(m³/min)	-3.4	-4	4.00	3.99	3.98	3.95	3.91
	-1.3	-2	4.13	4.12	4.11	4.03	3.95
	0.8	0	4.36	4.29	4.23	4.08	3.93
	3.9	3	4.73	4.56	4.39	4.14	3.90
	7.0	6	5.16	4.83	4.49	4.18	3.86
	10.1	9	5.13	4.80	4.47	4.15	3.83
	13.2	12	5.10	4.77	4.45	4.12	3.79
	16.9	15.5	5.06	4.73	4.41	4.08	3.75

Air flow	Ambient air temp. (℃DB)	Indoor air temperature 21 ℃DB 14 ℃WB TC	21 ℃DB 14 ℃WB SHC	23 ℃DB 16 ℃WB TC	23 ℃DB 16 ℃WB SHC	26 ℃DB 18 ℃WB TC	26 ℃DB 18 ℃WB SHC	27 ℃DB 19 ℃WB TC	27 ℃DB 19 ℃WB SHC	28 ℃DB 20 ℃WB TC	28 ℃DB 20 ℃WB SHC	31 ℃DB 22 ℃WB TC	31 ℃DB 22 ℃WB SHC	33 ℃DB 24 ℃WB TC	33 ℃DB 24 ℃WB SHC
Lo	10			3.16	2.62	3.78	2.97	4.09	3.03	4.35	3.07	4.88	3.32	5.06	3.23
	12			3.16	2.62	3.78	2.97	4.09	3.03	4.35	3.07	4.86	3.31	5.04	3.23
	14			3.16	2.62	3.78	2.97	4.09	3.03	4.34	3.07	4.84	3.31	5.02	3.22
	16			3.16	2.62	3.78	2.97	4.09	3.03	4.34	3.07	4.82	3.30	5.00	3.21
	18			3.16	2.62	3.78	2.97	4.09	3.03	4.33	3.06	4.81	3.30	4.98	3.21
	20			3.16	2.62	3.78	2.97	4.09	3.03	4.32	3.06	4.79	3.28	4.95	3.20
	22			3.16	2.62	3.78	2.97	4.09	3.03	4.30	3.05	4.73	3.26	4.89	3.17
11	24			3.16	2.62	3.78	2.97	4.09	3.03	4.28	3.04	4.67	3.24	4.82	3.15
(m³/min)	26			3.15	2.62	3.76	2.96	4.05	3.01	4.23	3.02	4.59	3.21	4.74	3.12
	28	2.86	2.59	3.15	2.62	3.74	2.95	4.01	3.00	4.18	3.00	4.52	3.18	4.67	3.10
	30	2.86	2.59	3.14	2.62	3.72	2.94	3.98	2.99	4.13	2.98	4.45	3.16	4.60	3.07
	32	2.86	2.59	3.13	2.61	3.69	2.93	3.94	2.97	4.09	2.97	4.38	3.13	4.53	3.05
	34	2.86	2.59	3.12	2.61	3.67	2.92	3.89	2.95	4.02	2.94	4.29	3.10	4.44	3.02
	35	2.86	2.59	3.12	2.61	3.67	2.92	3.86	2.93	3.99	2.93	4.24	3.08	4.39	3.01
	36	2.86	2.59	3.12	2.61	3.64	2.91	3.84	2.93	3.95	2.91	4.17	3.05	4.31	2.98
	38	2.86	2.59	3.11	2.60	3.58	2.88	3.80	2.92	3.87	2.88	4.01	3.00	4.13	2.90
	39	2.86	2.59	3.10	2.60	3.56	2.88	3.78	2.91	3.83	2.86	3.94	2.97	4.05	2.88
	41	2.86	2.59	3.09	2.59	3.45	2.83	3.63	2.85	3.67	2.80	3.76	2.90	3.86	2.82
	43	2.86	2.59	3.08	2.59	3.34	2.78	3.47	2.78	3.51	2.74	3.59	2.84	3.67	2.77

Air flow	Ambient air temp. DB	Ambient air temp. WB	Indoor air temp. 16 ℃CDB	18 ℃CDB	20 ℃CDB	22 ℃CDB	24 ℃CDB
Lo	-19.8	-20	2.44	2.44	2.44	2.44	2.44
	-17.8	-18	2.60	2.60	2.60	2.60	2.60
	-15.7	-16	2.76	2.76	2.76	2.76	2.76
	-13.7	-14	2.91	2.91	2.91	2.91	2.91
	-11.7	-12	3.07	3.07	3.07	3.07	3.07
	-9.6	-10	3.23	3.23	3.23	3.23	3.23
	-7.5	-8	3.42	3.42	3.42	3.42	3.42
11	-5.5	-6	3.62	3.62	3.62	3.62	3.62
(m³/min)	-3.4	-4	3.75	3.74	3.74	3.70	3.66
	-1.3	-2	3.87	3.86	3.85	3.78	3.70
	0.8	0	4.08	4.03	3.97	3.83	3.68
	3.9	3	4.43	4.27	4.12	3.88	3.65
	7.0	6	4.84	4.53	4.21	3.92	3.62
	10.1	9	4.81	4.50	4.19	3.89	3.59
	13.2	12	4.78	4.47	4.17	3.86	3.56
	16.9	15.5	4.74	4.44	4.13	3.83	3.52

Note(1) This data shows average statuses out of those possible to occur in the system control.
(Depending on controls, there may be ranges where the operation is not conducted continuously.)
(2) Symbols are as follows
TC :Total cooling capacity(kW)
SHC :Sensible heat capacity(kW)

Cool mode	Uhi	Hi	Me	Lo
Air flow	15.50	14	12	11
TC	4.78	4.50	4.08	3.86
SHF	0.79	0.78	0.76	0.76

Heat mode	Uhi	Hi	Me	Lo
Air flow	15.5	14	12	11
Heating capacity	5.36	5.00	4.49	4.21

Model **FDUM56KXE6** Cool Mode

Air flow	Ambient air temp. (℃DB)	Indoor air temperature 21 ℃CDB 14 ℃CWB TC	21 ℃CDB 14 ℃CWB SHC	23 ℃CDB 16 ℃CWB TC	23 ℃CDB 16 ℃CWB SHC	26 ℃CDB 18 ℃CWB TC	26 ℃CDB 18 ℃CWB SHC	27 ℃CDB 19 ℃CWB TC	27 ℃CDB 19 ℃CWB SHC	28 ℃CDB 20 ℃CWB TC	28 ℃CDB 20 ℃CWB SHC	31 ℃CDB 22 ℃CWB TC	31 ℃CDB 22 ℃CWB SHC	33 ℃CDB 24 ℃CWB TC	33 ℃CDB 24 ℃CWB SHC
	10			4.91	3.92	5.87	4.44	6.35	4.54	6.76	4.61	7.57	4.97	7.86	4.84
	12			4.91	3.92	5.87	4.44	6.35	4.54	6.75	4.60	7.54	4.96	7.82	4.82
	14			4.91	3.92	5.87	4.44	6.35	4.54	6.74	4.60	7.51	4.95	7.79	4.81
	16			4.91	3.92	5.87	4.44	6.35	4.54	6.73	4.60	7.48	4.94	7.76	4.80
	18			4.91	3.92	5.87	4.44	6.35	4.54	6.72	4.59	7.46	4.93	7.72	4.79
Uhi	20			4.91	3.92	5.87	4.44	6.35	4.54	6.71	4.58	7.43	4.92	7.69	4.78
	22			4.90	3.92	5.87	4.44	6.35	4.54	6.68	4.57	7.34	4.88	7.58	4.74
15.5	24			4.90	3.92	5.86	4.43	6.35	4.54	6.65	4.56	7.24	4.84	7.48	4.71
(m^3/min)	26			4.89	3.91	5.84	4.42	6.29	4.52	6.57	4.53	7.13	4.80	7.36	4.66
	28	4.43	3.86	4.89	3.91	5.81	4.41	6.23	4.49	6.49	4.49	7.01	4.75	7.25	4.63
	30	4.43	3.86	4.88	3.91	5.77	4.39	6.17	4.46	6.42	4.47	6.91	4.72	7.14	4.58
	32	4.43	3.86	4.86	3.90	5.72	4.37	6.11	4.44	6.34	4.43	6.80	4.67	7.03	4.55
	34	4.43	3.86	4.85	3.90	5.70	4.36	6.03	4.41	6.24	4.39	6.66	4.62	6.89	4.50
	35	4.43	3.86	4.84	3.89	5.69	4.36	5.99	4.37	6.19	4.37	6.58	4.59	6.81	4.47
	36	4.43	3.86	4.83	3.89	5.65	4.34	5.96	4.37	6.13	4.34	6.47	4.55	6.68	4.43
	38	4.43	3.86	4.82	3.88	5.56	4.30	5.90	4.35	6.01	4.30	6.23	4.46	6.42	4.34
	39	4.43	3.86	4.82	3.88	5.52	4.29	5.87	4.34	5.95	4.28	6.11	4.41	6.28	4.27
	41	4.43	3.86	4.80	3.87	5.35	4.21	5.63	4.24	5.70	4.18	5.84	4.30	5.99	4.18
	43	4.43	3.86	4.78	3.87	5.19	4.14	5.39	4.14	5.45	4.08	5.57	4.21	5.69	4.09

Heat Mode

Air flow	Ambient air temp. DB	Ambient air temp. WB	Indoor air temp. 16 ℃CDB	18 ℃CDB	20 ℃CDB	22 ℃CDB	24 ℃CDB
	-19.8	-20	3.96	3.96	3.96	3.96	3.96
	-17.8	-18	4.22	4.22	4.22	4.22	4.22
	-15.7	-16	4.47	4.47	4.47	4.47	4.47
	-13.7	-14	4.73	4.73	4.73	4.73	4.73
	-11.7	-12	4.98	4.98	4.98	4.98	4.98
Uhi	-9.6	-10	5.24	5.24	5.24	5.24	5.24
	-7.5	-8	5.56	5.56	5.56	5.56	5.56
15.5	-5.5	-6	5.87	5.87	5.87	5.87	5.87
(m^3/min)	-3.4	-4	6.08	6.07	6.06	6.00	5.94
	-1.3	-2	6.28	6.27	6.25	6.13	6.01
	0.8	0	6.63	6.53	6.44	6.21	5.98
	3.9	3	7.19	6.93	6.68	6.30	5.93
	7.0	6	7.85	7.34	6.83	6.35	5.87
	10.1	9	7.80	7.30	6.80	6.31	5.82
	13.2	12	7.75	7.26	6.76	6.27	5.77
	16.9	15.5	7.69	7.20	6.70	6.21	5.71

Air flow	Ambient air temp. (℃DB)	Indoor air temperature 21 ℃CDB 14 ℃CWB TC	21 ℃CDB 14 ℃CWB SHC	23 ℃CDB 16 ℃CWB TC	23 ℃CDB 16 ℃CWB SHC	26 ℃CDB 18 ℃CWB TC	26 ℃CDB 18 ℃CWB SHC	27 ℃CDB 19 ℃CWB TC	27 ℃CDB 19 ℃CWB SHC	28 ℃CDB 20 ℃CWB TC	28 ℃CDB 20 ℃CWB SHC	31 ℃CDB 22 ℃CWB TC	31 ℃CDB 22 ℃CWB SHC	33 ℃CDB 24 ℃CWB TC	33 ℃CDB 24 ℃CWB SHC
	10			4.59	3.61	5.49	4.09	5.94	4.19	6.32	4.25	7.07	4.57	7.35	4.46
	12			4.59	3.61	5.49	4.09	5.94	4.19	6.31	4.25	7.05	4.56	7.31	4.44
	14			4.59	3.61	5.49	4.09	5.94	4.19	6.30	4.24	7.02	4.55	7.28	4.43
	16			4.59	3.61	5.49	4.09	5.94	4.19	6.29	4.24	7.00	4.54	7.25	4.42
	18			4.59	3.61	5.49	4.09	5.94	4.19	6.28	4.24	6.97	4.53	7.22	4.41
Hi	20			4.59	3.61	5.49	4.09	5.94	4.19	6.27	4.23	6.95	4.53	7.19	4.40
	22			4.58	3.61	5.49	4.09	5.94	4.19	6.24	4.22	6.86	4.49	7.09	4.37
14	24			4.58	3.61	5.48	4.09	5.94	4.19	6.21	4.20	6.77	4.46	6.99	4.33
(m^3/min)	26			4.57	3.60	5.46	4.07	5.88	4.16	6.14	4.18	6.66	4.42	6.88	4.29
	28	4.14	3.55	4.57	3.60	5.43	4.06	5.82	4.14	6.07	4.14	6.56	4.38	6.78	4.26
	30	4.14	3.55	4.56	3.60	5.39	4.05	5.77	4.12	6.00	4.12	6.46	4.34	6.67	4.22
	32	4.14	3.55	4.55	3.60	5.35	4.03	5.71	4.09	5.93	4.09	6.36	4.30	6.57	4.19
	34	4.14	3.55	4.53	3.59	5.33	4.02	5.64	4.06	5.83	4.05	6.22	4.25	6.44	4.14
	35	4.14	3.55	4.52	3.58	5.32	4.02	5.60	4.03	5.79	4.03	6.16	4.22	6.37	4.12
	36	4.14	3.55	4.52	3.58	5.28	4.00	5.57	4.03	5.73	4.01	6.05	4.19	6.25	4.07
	38	4.14	3.55	4.51	3.57	5.20	3.96	5.52	4.01	5.62	3.96	5.82	4.10	6.00	3.99
	39	4.14	3.55	4.50	3.57	5.16	3.95	5.49	4.00	5.56	3.94	5.71	4.06	5.87	3.94
	41	4.14	3.55	4.49	3.56	5.00	3.88	5.26	3.90	5.33	3.84	5.46	3.97	5.60	3.83
	43	4.14	3.55	4.47	3.56	4.85	3.81	5.04	3.81	5.10	3.75	5.21	3.86	5.32	3.75

Air flow	Ambient air temp. DB	Ambient air temp. WB	Indoor air temp. 16 ℃CDB	18 ℃CDB	20 ℃CDB	22 ℃CDB	24 ℃CDB
	-19.8	-20	3.65	3.65	3.65	3.65	3.65
	-17.8	-18	3.89	3.89	3.89	3.89	3.89
	-15.7	-16	4.12	4.12	4.12	4.12	4.12
	-13.7	-14	4.36	4.36	4.36	4.36	4.36
	-11.7	-12	4.59	4.59	4.59	4.59	4.59
Hi	-9.6	-10	4.83	4.83	4.83	4.83	4.83
	-7.5	-8	5.12	5.12	5.12	5.12	5.12
14	-5.5	-6	5.42	5.42	5.42	5.42	5.42
(m^3/min)	-3.4	-4	5.61	5.60	5.59	5.54	5.48
	-1.3	-2	5.80	5.78	5.76	5.65	5.54
	0.8	0	6.11	6.02	5.94	5.73	5.51
	3.9	3	6.63	6.39	6.16	5.81	5.47
	7.0	6	7.25	6.77	6.30	5.86	5.42
	10.1	9	7.20	6.74	6.28	5.82	5.37
	13.2	12	7.15	6.69	6.24	5.78	5.32
	16.9	15.5	7.10	6.64	6.18	5.73	5.27

Air flow	Ambient air temp. (℃DB)	Indoor air temperature 21 ℃CDB 14 ℃CWB TC	21 ℃CDB 14 ℃CWB SHC	23 ℃CDB 16 ℃CWB TC	23 ℃CDB 16 ℃CWB SHC	26 ℃CDB 18 ℃CWB TC	26 ℃CDB 18 ℃CWB SHC	27 ℃CDB 19 ℃CWB TC	27 ℃CDB 19 ℃CWB SHC	28 ℃CDB 20 ℃CWB TC	28 ℃CDB 20 ℃CWB SHC	31 ℃CDB 22 ℃CWB TC	31 ℃CDB 22 ℃CWB SHC	33 ℃CDB 24 ℃CWB TC	33 ℃CDB 24 ℃CWB SHC
	10			4.11	3.19	4.92	3.62	5.32	3.70	5.66	3.76	6.34	4.05	6.58	3.95
	12			4.11	3.19	4.92	3.62	5.32	3.70	5.65	3.76	6.32	4.04	6.56	3.94
	14			4.11	3.19	4.92	3.62	5.32	3.70	5.65	3.76	6.30	4.04	6.53	3.93
	16			4.11	3.19	4.92	3.62	5.32	3.70	5.64	3.75	6.27	4.03	6.50	3.92
	18			4.11	3.19	4.92	3.62	5.32	3.70	5.63	3.75	6.25	4.02	6.47	3.90
Me	20			4.11	3.19	4.92	3.62	5.32	3.70	5.62	3.75	6.23	4.01	6.44	3.89
	22			4.11	3.19	4.92	3.62	5.32	3.70	5.60	3.73	6.15	3.98	6.35	3.86
12	24			4.10	3.18	4.92	3.62	5.32	3.70	5.57	3.72	6.07	3.95	6.27	3.83
(m^3/min)	26			4.10	3.18	4.89	3.60	5.27	3.68	5.51	3.70	5.97	3.91	6.17	3.79
	28	3.71	3.14	4.10	3.18	4.87	3.59	5.22	3.66	5.44	3.67	5.88	3.88	6.07	3.76
	30	3.71	3.14	4.09	3.18	4.83	3.58	5.17	3.64	5.38	3.64	5.79	3.84	5.98	3.73
	32	3.71	3.14	4.08	3.17	4.79	3.56	5.12	3.62	5.31	3.62	5.70	3.80	5.89	3.70
	34	3.71	3.14	4.06	3.17	4.78	3.56	5.05	3.59	5.23	3.58	5.58	3.76	5.77	3.65
	35	3.71	3.14	4.06	3.17	4.77	3.55	5.02	3.56	5.19	3.56	5.52	3.73	5.71	3.63
	36	3.71	3.14	4.05	3.16	4.73	3.53	4.99	3.56	5.14	3.54	5.42	3.70	5.60	3.59
	38	3.71	3.14	4.04	3.16	4.66	3.50	4.94	3.54	5.04	3.50	5.22	3.61	5.38	3.52
	39	3.71	3.14	4.04	3.16	4.63	3.49	4.92	3.53	4.99	3.48	5.12	3.58	5.27	3.46
	41	3.71	3.14	4.02	3.15	4.49	3.42	4.72	3.45	4.78	3.39	4.89	3.48	5.02	3.39
	43	3.71	3.14	4.01	3.14	4.35	3.36	4.52	3.36	4.57	3.30	4.67	3.41	4.77	3.31

Air flow	Ambient air temp. DB	Ambient air temp. WB	Indoor air temp. 16 ℃CDB	18 ℃CDB	20 ℃CDB	22 ℃CDB	24 ℃CDB
	-19.8	-20	3.22	3.22	3.22	3.22	3.22
	-17.8	-18	3.43	3.43	3.43	3.43	3.43
	-15.7	-16	3.64	3.64	3.64	3.64	3.64
	-13.7	-14	3.85	3.85	3.85	3.85	3.85
	-11.7	-12	4.06	4.06	4.06	4.06	4.06
Me	-9.6	-10	4.26	4.26	4.26	4.26	4.26
	-7.5	-8	4.52	4.52	4.52	4.52	4.52
12	-5.5	-6	4.78	4.78	4.78	4.78	4.78
(m^3/min)	-3.4	-4	4.95	4.94	4.93	4.89	4.84
	-1.3	-2	5.12	5.10	5.09	4.99	4.89
	0.8	0	5.39	5.32	5.24	5.05	4.87
	3.9	3	5.85	5.64	5.43	5.13	4.82
	7.0	6	6.39	5.98	5.56	5.17	4.78
	10.1	9	6.35	5.95	5.54	5.14	4.74
	13.2	12	6.31	5.91	5.50	5.10	4.70
	16.9	15.5	6.26	5.86	5.46	5.05	4.65

Air flow	Ambient air temp. (℃DB)	Indoor air temperature 21 ℃CDB 14 ℃CWB TC	21 ℃CDB 14 ℃CWB SHC	23 ℃CDB 16 ℃CWB TC	23 ℃CDB 16 ℃CWB SHC	26 ℃CDB 18 ℃CWB TC	26 ℃CDB 18 ℃CWB SHC	27 ℃CDB 19 ℃CWB TC	27 ℃CDB 19 ℃CWB SHC	28 ℃CDB 20 ℃CWB TC	28 ℃CDB 20 ℃CWB SHC	31 ℃CDB 22 ℃CWB TC	31 ℃CDB 22 ℃CWB SHC	33 ℃CDB 24 ℃CWB TC	33 ℃CDB 24 ℃CWB SHC
	10			3.85	2.98	4.61	3.37	4.98	3.45	5.30	3.51	5.94	3.79	6.16	3.68
	12			3.85	2.98	4.61	3.37	4.98	3.45	5.29	3.51	5.92	3.77	6.14	3.67
	14			3.85	2.98	4.61	3.37	4.98	3.45	5.29	3.51	5.89	3.76	6.11	3.66
	16			3.85	2.98	4.61	3.37	4.98	3.45	5.28	3.50	5.87	3.76	6.09	3.65
	18			3.85	2.98	4.61	3.37	4.98	3.45	5.27	3.50	5.85	3.75	6.06	3.64
Lo	20			3.85	2.98	4.61	3.37	4.98	3.45	5.26	3.49	5.83	3.74	6.03	3.63
	22			3.85	2.98	4.60	3.36	4.98	3.45	5.24	3.48	5.76	3.71	5.95	3.60
11	24			3.84	2.97	4.60	3.36	4.98	3.45	5.22	3.47	5.68	3.68	5.87	3.57
(m^3/min)	26			3.84	2.97	4.58	3.35	4.94	3.44	5.15	3.45	5.59	3.64	5.78	3.54
	28	3.48	2.93	3.84	2.97	4.56	3.34	4.89	3.42	5.09	3.42	5.50	3.61	5.69	3.51
	30	3.48	2.93	3.83	2.97	4.52	3.33	4.84	3.39	5.03	3.39	5.42	3.58	5.60	3.47
	32	3.48	2.93	3.82	2.96	4.49	3.32	4.79	3.37	4.97	3.37	5.34	3.54	5.52	3.45
	34	3.48	2.93	3.80	2.95	4.47	3.31	4.73	3.34	4.90	3.33	5.22	3.50	5.40	3.40
	35	3.48	2.93	3.80	2.95	4.47	3.31	4.70	3.29	4.86	3.31	5.17	3.48	5.35	3.39
	36	3.48	2.93	3.79	2.95	4.43	3.29	4.68	3.32	4.81	3.29	5.07	3.44	5.24	3.33
	38	3.48	2.93	3.78	2.95	4.36	3.26	4.63	3.30	4.72	3.26	4.89	3.36	5.03	3.27
	39	3.48	2.93	3.78	2.95	4.33	3.25	4.61	3.29	4.67	3.24	4.80	3.33	4.93	3.24
	41	3.48	2.93	3.77	2.94	4.20	3.19	4.42	3.22	4.47	3.17	4.58	3.26	4.70	3.16
	43	3.48	2.93	3.75	2.93	4.07	3.13	4.23	3.14	4.28	3.09	4.37	3.18	4.47	3.08

Air flow	Ambient air temp. DB	Ambient air temp. WB	Indoor air temp. 16 ℃CDB	18 ℃CDB	20 ℃CDB	22 ℃CDB	24 ℃CDB
	-19.8	-20	3.00	3.00	3.00	3.00	3.00
	-17.8	-18	3.19	3.19	3.19	3.19	3.19
	-15.7	-16	3.38	3.38	3.38	3.38	3.38
	-13.7	-14	3.58	3.58	3.58	3.58	3.58
	-11.7	-12	3.77	3.77	3.77	3.77	3.77
Lo	-9.6	-10	3.96	3.96	3.96	3.96	3.96
	-7.5	-8	4.20	4.20	4.20	4.20	4.20
11	-5.5	-6	4.45	4.45	4.45	4.45	4.45
(m^3/min)	-3.4	-4	4.60	4.59	4.59	4.54	4.50
	-1.3	-2	4.76	4.74	4.73	4.64	4.55
	0.8	0	5.01	4.94	4.87	4.70	4.52
	3.9	3	5.44	5.25	5.05	4.77	4.48
	7.0	6	5.95	5.56	5.17	4.81	4.45
	10.1	9	5.91	5.53	5.15	4.78	4.41
	13.2	12	5.87	5.49	5.12	4.74	4.37
	16.9	15.5	5.82	5.45	5.07	4.70	4.32

Note(1) This data shows average statuses out of those possible to occur in the system control.
(Depending on controls, there may be ranges where the operation is not conducted continuously.)

(2) Symbols are as follows
TC :Total cooling capacity(kW)
SHC :Sensible heat capacity(kW)

Cool mode	Uhi	Hi	Me	Lo
Air flow	15.50	14	12	11
TC	5.99	5.60	5.02	4.70
SHF	0.73	0.72	0.71	0.70

Heat mode	Uhi	Hi	Me	Lo
Air flow	15.5	14	12	11
Heating capacity	6.83	6.30	5.56	5.17

Model **FDUM71KXE6** Cool Mode

Air flow	Ambient air temp. (°CDB)	Indoor air temperature 21 °CDB 14 °CWB TC	SHC	23 °CDB 16 °CWB TC	SHC	26 °CDB 18 °CWB TC	SHC	27 °CDB 19 °CWB TC	SHC	28 °CDB 20 °CWB TC	SHC	31 °CDB 22 °CWB TC	SHC	33 °CDB 24 °CWB TC	SHC
Uhi	10			6.24	4.99	7.46	5.64	8.07	5.78	8.58	5.84	9.61	6.32	9.98	6.14
	12			6.24	4.99	7.46	5.64	8.07	5.78	8.57	5.84	9.58	6.29	9.94	6.13
	14			6.24	4.99	7.46	5.64	8.07	5.78	8.56	5.83	9.54	6.27	9.90	6.11
	16			6.24	4.99	7.46	5.64	8.07	5.78	8.55	5.83	9.51	6.26	9.85	6.10
	18			6.24	4.99	7.46	5.64	8.07	5.78	8.54	5.83	9.47	6.25	9.81	6.09
	20			6.24	4.99	7.46	5.64	8.07	5.78	8.52	5.82	9.44	6.24	9.77	6.07
	22			6.23	4.99	7.45	5.64	8.07	5.78	8.48	5.80	9.32	6.20	9.63	6.03
20	24			6.22	4.99	7.45	5.64	8.07	5.78	8.44	5.79	9.20	6.16	9.50	5.99
(m^3/min)	26			6.22	4.99	7.42	5.63	7.99	5.75	8.35	5.76	9.06	6.11	9.35	5.93
	28	5.63	4.91	6.21	4.98	7.38	5.61	7.91	5.72	8.25	5.72	8.91	6.05	9.21	5.88
	30	5.63	4.91	6.19	4.97	7.32	5.59	7.84	5.68	8.15	5.68	8.77	6.00	9.07	5.84
	32	5.63	4.91	6.18	4.97	7.27	5.57	7.76	5.65	8.05	5.64	8.64	5.95	8.93	5.78
	34	5.63	4.91	6.16	4.95	7.24	5.56	7.66	5.61	7.93	5.59	8.46	5.88	8.75	5.73
	35	5.63	4.91	6.15	4.95	7.23	5.54	7.61	5.56	7.86	5.57	8.37	5.85	8.66	5.69
	36	5.63	4.91	6.14	4.94	7.17	5.52	7.57	5.57	7.79	5.53	8.21	5.78	8.49	5.64
	38	5.63	4.91	6.13	4.94	7.07	5.48	7.50	5.54	7.64	5.48	7.91	5.67	8.15	5.53
	39	5.63	4.91	6.12	4.93	7.01	5.46	7.46	5.53	7.56	5.44	7.76	5.62	7.98	5.46
	41	5.63	4.91	6.10	4.93	6.80	5.37	7.15	5.40	7.24	5.31	7.42	5.50	7.61	5.34
	43	5.63	4.91	6.08	4.92	6.59	5.27	6.85	5.27	6.92	5.19	7.07	5.34	7.23	5.19

Heat Mode

Air flow	Ambient air temp. DB	WB	Indoor air temp. 16 °CDB	18 °CDB	20 °CDB	22 °CDB	24 °CDB
Uhi	-19.8	-20	5.05	5.05	5.05	5.05	5.05
	-17.8	-18	5.37	5.37	5.37	5.37	5.37
	-15.7	-16	5.70	5.70	5.70	5.70	5.70
	-13.7	-14	6.02	6.02	6.02	6.02	6.02
	-11.7	-12	6.35	6.35	6.35	6.35	6.35
	-9.6	-10	6.67	6.67	6.67	6.67	6.67
	-7.5	-8	7.08	7.08	7.08	7.08	7.08
20	-5.5	-6	7.48	7.48	7.48	7.48	7.48
(m^3/min)	-3.4	-4	7.74	7.73	7.72	7.65	7.57
	-1.3	-2	8.00	7.98	7.96	7.81	7.66
	0.8	0	8.44	8.32	8.20	7.91	7.61
	3.9	3	9.16	8.83	8.50	8.03	7.55
	7.0	6	10.01	9.35	8.70	8.09	7.48
	10.1	9	9.94	9.30	8.67	8.04	7.42
	13.2	12	9.87	9.24	8.61	7.98	7.35
	16.9	15.5	9.80	9.17	8.54	7.91	7.28

Air flow	Ambient air temp. (°CDB)	Indoor air temperature 21 °CDB 14 °CWB TC	SHC	23 °CDB 16 °CWB TC	SHC	26 °CDB 18 °CWB TC	SHC	27 °CDB 19 °CWB TC	SHC	28 °CDB 20 °CWB TC	SHC	31 °CDB 22 °CWB TC	SHC	33 °CDB 24 °CWB TC	SHC
Hi	10			5.82	4.59	6.96	5.19	7.53	5.30	8.01	5.39	8.97	5.82	9.31	5.66
	12			5.82	4.59	6.96	5.19	7.53	5.30	8.00	5.39	8.94	5.81	9.27	5.65
	14			5.82	4.59	6.96	5.19	7.53	5.30	7.99	5.38	8.90	5.79	9.23	5.63
	16			5.82	4.59	6.96	5.19	7.53	5.30	7.97	5.38	8.87	5.78	9.19	5.62
	18			5.82	4.59	6.96	5.19	7.53	5.30	7.96	5.37	8.84	5.77	9.15	5.61
	20			5.82	4.59	6.96	5.19	7.53	5.30	7.95	5.37	8.81	5.75	9.11	5.57
	22			5.81	4.58	6.95	5.19	7.53	5.30	7.92	5.36	8.70	5.71	8.99	5.53
18	24			5.80	4.57	6.95	5.19	7.53	5.30	7.88	5.34	8.58	5.64	8.86	5.49
(m^3/min)	26			5.80	4.57	6.92	5.17	7.46	5.28	7.79	5.28	8.45	5.60	8.73	5.45
	28	5.25	4.51	5.79	4.57	6.89	5.16	7.38	5.25	7.69	5.25	8.31	5.55	8.59	5.40
	30	5.25	4.51	5.78	4.56	6.83	5.13	7.31	5.22	7.60	5.21	8.19	5.51	8.46	5.35
	32	5.25	4.51	5.77	4.56	6.78	5.11	7.24	5.19	7.51	5.18	8.06	5.46	8.33	5.31
	34	5.25	4.51	5.75	4.55	6.76	5.11	7.15	5.16	7.39	5.13	7.89	5.40	8.16	5.25
	35	5.25	4.51	5.74	4.55	6.75	5.10	7.10	5.11	7.33	5.11	7.80	5.36	8.08	5.23
	36	5.25	4.51	5.73	4.54	6.69	5.07	7.06	5.11	7.26	5.08	7.66	5.31	7.92	5.17
	38	5.25	4.51	5.72	4.54	6.59	5.03	6.99	5.09	7.12	5.03	7.38	5.20	7.61	5.07
	39	5.25	4.51	5.71	4.53	6.54	5.01	6.96	5.08	7.05	4.99	7.24	5.15	7.45	5.01
	41	5.25	4.51	5.69	4.53	6.35	4.93	6.67	4.96	6.76	4.88	6.92	5.04	7.10	4.89
	43	5.25	4.51	5.67	4.52	6.15	4.84	6.39	4.83	6.46	4.76	6.60	4.92	6.75	4.75

Air flow	Ambient air temp. DB	WB	Indoor air temp. 16 °CDB	18 °CDB	20 °CDB	22 °CDB	24 °CDB
Hi	-19.8	-20	4.64	4.64	4.64	4.64	4.64
	-17.8	-18	4.94	4.94	4.94	4.94	4.94
	-15.7	-16	5.24	5.24	5.24	5.24	5.24
	-13.7	-14	5.54	5.54	5.54	5.54	5.54
	-11.7	-12	5.83	5.83	5.83	5.83	5.83
	-9.6	-10	6.13	6.13	6.13	6.13	6.13
	-7.5	-8	6.51	6.51	6.51	6.51	6.51
18	-5.5	-6	6.88	6.88	6.88	6.88	6.88
(m^3/min)	-3.4	-4	7.12	7.11	7.10	7.03	6.96
	-1.3	-2	7.36	7.34	7.32	7.18	7.04
	0.8	0	7.76	7.65	7.54	7.27	7.00
	3.9	3	8.42	8.12	7.82	7.38	6.94
	7.0	6	9.20	8.60	8.00	7.44	6.88
	10.1	9	9.14	8.56	7.97	7.40	6.82
	13.2	12	9.08	8.50	7.92	7.34	6.76
	16.9	15.5	9.01	8.43	7.85	7.27	6.69

Air flow	Ambient air temp. (°CDB)	Indoor air temperature 21 °CDB 14 °CWB TC	SHC	23 °CDB 16 °CWB TC	SHC	26 °CDB 18 °CWB TC	SHC	27 °CDB 19 °CWB TC	SHC	28 °CDB 20 °CWB TC	SHC	31 °CDB 22 °CWB TC	SHC	33 °CDB 24 °CWB TC	SHC
Me	10			5.37	4.17	6.42	4.71	6.94	4.83	7.39	4.91	8.27	5.29	8.59	5.15
	12			5.37	4.17	6.42	4.71	6.94	4.83	7.38	4.91	8.24	5.28	8.55	5.13
	14			5.37	4.17	6.42	4.71	6.94	4.83	7.37	4.90	8.21	5.27	8.52	5.13
	16			5.37	4.17	6.42	4.71	6.94	4.83	7.36	4.90	8.18	5.26	8.48	5.11
	18			5.37	4.17	6.42	4.71	6.94	4.83	7.35	4.89	8.15	5.24	8.44	5.09
	20			5.37	4.17	6.42	4.71	6.94	4.83	7.34	4.89	8.12	5.23	8.41	5.08
	22			5.36	4.16	6.42	4.71	6.94	4.83	7.30	4.87	8.02	5.19	8.29	5.03
16	24			5.35	4.15	6.41	4.71	6.94	4.83	7.27	4.86	7.92	5.15	8.18	5.00
(m^3/min)	26			5.35	4.15	6.38	4.69	6.88	4.81	7.18	4.82	7.79	5.10	8.05	4.93
	28	4.85	4.10	5.34	4.15	6.35	4.68	6.81	4.78	7.10	4.79	7.67	5.03	7.93	4.90
	30	4.85	4.10	5.33	4.15	6.30	4.66	6.75	4.74	7.02	4.75	7.55	4.99	7.81	4.86
	32	4.85	4.10	5.32	4.14	6.26	4.65	6.68	4.71	6.93	4.70	7.44	4.95	7.69	4.82
	34	4.85	4.10	5.30	4.13	6.23	4.63	6.59	4.67	6.82	4.66	7.28	4.90	7.53	4.76
	35	4.85	4.10	5.29	4.13	6.22	4.63	6.55	4.65	6.77	4.64	7.20	4.87	7.45	4.74
	36	4.85	4.10	5.29	4.13	6.18	4.61	6.52	4.65	6.70	4.61	7.07	4.82	7.31	4.69
	38	4.85	4.10	5.27	4.12	6.08	4.57	6.45	4.62	6.57	4.56	6.81	4.72	7.02	4.59
	39	4.85	4.10	5.27	4.12	6.03	4.55	6.42	4.61	6.51	4.54	6.68	4.67	6.87	4.53
	41	4.85	4.10	5.25	4.11	5.85	4.47	6.16	4.50	6.23	4.42	6.39	4.57	6.55	4.43
	43	4.85	4.10	5.23	4.10	5.67	4.39	5.90	4.39	5.96	4.32	6.09	4.45	6.23	4.31

Air flow	Ambient air temp. DB	WB	Indoor air temp. 16 °CDB	18 °CDB	20 °CDB	22 °CDB	24 °CDB
Me	-19.8	-20	4.22	4.22	4.22	4.22	4.22
	-17.8	-18	4.49	4.49	4.49	4.49	4.49
	-15.7	-16	4.76	4.76	4.76	4.76	4.76
	-13.7	-14	5.03	5.03	5.03	5.03	5.03
	-11.7	-12	5.30	5.30	5.30	5.30	5.30
	-9.6	-10	5.57	5.57	5.57	5.57	5.57
	-7.5	-8	5.91	5.91	5.91	5.91	5.91
16	-5.5	-6	6.25	6.25	6.25	6.25	6.25
(m^3/min)	-3.4	-4	6.47	6.46	6.45	6.39	6.32
	-1.3	-2	6.69	6.67	6.65	6.52	6.40
	0.8	0	7.05	6.95	6.85	6.61	6.36
	3.9	3	7.65	7.38	7.11	6.71	6.31
	7.0	6	8.36	7.82	7.27	6.76	6.25
	10.1	9	8.31	7.77	7.24	6.72	6.20
	13.2	12	8.25	7.72	7.20	6.67	6.14
	16.9	15.5	8.19	7.66	7.13	6.61	6.08

Air flow	Ambient air temp. (°CDB)	Indoor air temperature 21 °CDB 14 °CWB TC	SHC	23 °CDB 16 °CWB TC	SHC	26 °CDB 18 °CWB TC	SHC	27 °CDB 19 °CWB TC	SHC	28 °CDB 20 °CWB TC	SHC	31 °CDB 22 °CWB TC	SHC	33 °CDB 24 °CWB TC	SHC
Lo	10			4.87	3.74	5.82	4.24	6.30	4.34	6.70	4.42	7.50	4.76	7.79	4.63
	12			4.87	3.74	5.82	4.24	6.30	4.34	6.69	4.41	7.48	4.75	7.76	4.62
	14			4.87	3.74	5.82	4.24	6.30	4.34	6.68	4.40	7.45	4.74	7.72	4.60
	16			4.87	3.74	5.82	4.24	6.30	4.34	6.67	4.40	7.42	4.72	7.69	4.59
	18			4.87	3.74	5.82	4.24	6.30	4.34	6.66	4.39	7.40	4.71	7.66	4.58
	20			4.87	3.74	5.82	4.24	6.30	4.34	6.65	4.39	7.37	4.70	7.62	4.56
	22			4.86	3.73	5.82	4.24	6.30	4.34	6.62	4.36	7.27	4.66	7.52	4.51
14	24			4.86	3.73	5.82	4.24	6.30	4.34	6.59	4.35	7.18	4.63	7.42	4.48
(m^3/min)	26			4.85	3.73	5.79	4.22	6.24	4.32	6.51	4.32	7.07	4.57	7.30	4.44
	28	4.40	3.68	4.85	3.73	5.76	4.21	6.18	4.29	6.44	4.30	6.96	4.53	7.19	4.40
	30	4.40	3.68	4.84	3.73	5.72	4.19	6.12	4.27	6.36	4.27	6.85	4.49	7.08	4.36
	32	4.40	3.68	4.82	3.72	5.67	4.17	6.06	4.24	6.29	4.24	6.74	4.45	6.97	4.33
	34	4.40	3.68	4.81	3.71	5.65	4.16	5.98	4.21	6.19	4.19	6.60	4.40	6.83	4.28
	35	4.40	3.68	4.80	3.71	5.64	4.16	5.94	4.16	6.14	4.18	6.53	4.37	6.76	4.25
	36	4.40	3.68	4.79	3.70	5.60	4.14	5.91	4.17	6.08	4.15	6.41	4.32	6.63	4.21
	38	4.40	3.68	4.78	3.70	5.52	4.10	5.85	4.15	5.96	4.10	6.18	4.23	6.36	4.11
	39	4.40	3.68	4.78	3.70	5.47	4.08	5.82	4.14	5.90	4.07	6.06	4.19	6.23	4.07
	41	4.40	3.68	4.76	3.69	5.31	4.01	5.58	4.03	5.65	3.97	5.79	4.08	5.94	3.97
	43	4.40	3.68	4.74	3.68	5.14	3.94	5.35	3.94	5.40	3.87	5.52	3.99	5.65	3.85

Air flow	Ambient air temp. DB	WB	Indoor air temp. 16 °CDB	18 °CDB	20 °CDB	22 °CDB	24 °CDB
Lo	-19.8	-20	3.77	3.77	3.77	3.77	3.77
	-17.8	-18	4.01	4.01	4.01	4.01	4.01
	-15.7	-16	4.26	4.26	4.26	4.26	4.26
	-13.7	-14	4.50	4.50	4.50	4.50	4.50
	-11.7	-12	4.74	4.74	4.74	4.74	4.74
	-9.6	-10	4.98	4.98	4.98	4.98	4.98
	-7.5	-8	5.29	5.29	5.29	5.29	5.29
14	-5.5	-6	5.59	5.59	5.59	5.59	5.59
(m^3/min)	-3.4	-4	5.79	5.78	5.77	5.71	5.66
	-1.3	-2	5.98	5.96	5.95	5.83	5.72
	0.8	0	6.31	6.22	6.13	5.91	5.69
	3.9	3	6.84	6.60	6.35	6.00	5.64
	7.0	6	7.48	6.99	6.50	6.05	5.59
	10.1	9	7.43	6.95	6.48	6.01	5.54
	13.2	12	7.38	6.91	6.44	5.96	5.49
	16.9	15.5	7.32	6.85	6.38	5.91	5.44

Note(1) This data shows average statuses out of those possible to occur in the system control.
(Depending on controls, there may be ranges where the operation is not conducted continuously.)
(2) Symbols are as follows
TC :Total cooling capacity(kW)
SHC :Sensible heat capacity(kW)

Cool mode	Uhi	Hi	Me	Lo
Air flow	20.00	18	16	14
TC	7.61	7.10	6.55	5.94
SHF	0.73	0.72	0.71	0.70

Heat mode	Uhi	Hi	Me	Lo
Air flow	20	18	16	14
Heating capacity	8.70	8.00	7.27	6.50

Model **FDUM90KXE6** Cool Mode

Air flow	Ambient air temp. (°CDB)	Indoor air temperature 21 °CDB 14 °CWB TC	21 °CDB 14 °CWB SHC	23 °CDB 16 °CWB TC	23 °CDB 16 °CWB SHC	26 °CDB 18 °CWB TC	26 °CDB 18 °CWB SHC	27 °CDB 19 °CWB TC	27 °CDB 19 °CWB SHC	28 °CDB 20 °CWB TC	28 °CDB 20 °CWB SHC	31 °CDB 22 °CWB TC	31 °CDB 22 °CWB SHC	33 °CDB 24 °CWB TC	33 °CDB 24 °CWB SHC
	10			7.83	5.86	9.36	6.65	10.12	6.82	10.77	6.93	12.06	7.47	12.53	7.27
	12			7.83	5.86	9.36	6.65	10.12	6.82	10.76	6.93	12.02	7.45	12.47	7.24
	14			7.83	5.86	9.36	6.65	10.12	6.82	10.74	6.92	11.98	7.44	12.42	7.23
	16			7.83	5.86	9.36	6.65	10.12	6.82	10.73	6.91	11.93	7.42	12.36	7.21
	18			7.83	5.86	9.36	6.65	10.12	6.82	10.71	6.91	11.89	7.41	12.31	7.18
Uhi	20			7.83	5.86	9.36	6.65	10.12	6.82	10.70	6.90	11.85	7.39	12.26	7.17
	22			7.82	5.85	9.35	6.64	10.12	6.82	10.65	6.89	11.70	7.33	12.09	7.10
22	24			7.81	5.85	9.35	6.64	10.12	6.82	10.60	6.87	11.55	7.27	11.92	7.04
(m³/min)	26			7.80	5.84	9.31	6.63	10.03	6.79	10.47	6.81	11.36	7.18	11.74	6.97
	28	7.07	5.74	7.79	5.84	9.26	6.60	9.93	6.74	10.35	6.75	11.18	7.11	11.56	6.90
	30	7.07	5.74	7.77	5.83	9.19	6.57	9.84	6.69	10.23	6.70	11.01	7.04	11.38	6.84
	32	7.07	5.74	7.75	5.82	9.12	6.53	9.74	6.66	10.11	6.65	10.84	6.97	11.21	6.75
	34	7.07	5.74	7.73	5.81	9.09	6.52	9.61	6.59	9.95	6.58	10.61	6.86	10.98	6.68
	35	7.07	5.74	7.72	5.81	9.07	6.51	9.55	6.59	9.87	6.54	10.50	6.82	10.86	6.64
	36	7.07	5.74	7.71	5.81	9.00	6.48	9.50	6.54	9.77	6.51	10.31	6.76	10.65	6.57
	38	7.07	5.74	7.69	5.80	8.87	6.42	9.41	6.51	9.58	6.43	9.93	6.61	10.23	6.42
	39	7.07	5.74	7.68	5.79	8.80	6.37	9.36	6.49	9.49	6.38	9.74	6.54	10.02	6.34
	41	7.07	5.74	7.65	5.77	8.54	6.27	8.98	6.30	9.09	6.21	9.31	6.37	9.55	6.18
	43	7.07	5.74	7.62	5.76	8.27	6.16	8.60	6.16	8.69	6.05	8.88	6.21	9.08	5.99

Heat Mode

Air flow	Ambient air temp. DB	Ambient air temp. WB	Indoor air temp. 16 °CDB	18 °CDB	20 °CDB	22 °CDB	24 °CDB
	-19.8	-20	6.25	6.25	6.25	6.25	6.25
	-17.8	-18	6.65	6.65	6.65	6.65	6.65
	-15.7	-16	7.05	7.05	7.05	7.05	7.05
	-13.7	-14	7.45	7.45	7.45	7.45	7.45
	-11.7	-12	7.85	7.85	7.85	7.85	7.85
Uhi	-9.6	-10	8.26	8.26	8.26	8.26	8.26
	-7.5	-8	8.76	8.76	8.76	8.76	8.76
22	-5.5	-6	9.26	9.26	9.26	9.26	9.26
(m³/min)	-3.4	-4	9.59	9.57	9.56	9.46	9.37
	-1.3	-2	9.91	9.88	9.85	9.67	9.48
	0.8	0	10.45	10.30	10.15	9.79	9.42
	3.9	3	11.34	10.93	10.53	9.94	9.34
	7.0	6	12.39	11.58	10.77	10.02	9.26
	10.1	9	12.30	11.52	10.73	9.96	9.18
	13.2	12	12.22	11.44	10.66	9.88	9.10
	16.9	15.5	12.13	11.35	10.57	9.79	9.01

Air flow	Ambient air temp. (°CDB)	Indoor air temperature 21 °CDB 14 °CWB TC	21 °CDB 14 °CWB SHC	23 °CDB 16 °CWB TC	23 °CDB 16 °CWB SHC	26 °CDB 18 °CWB TC	26 °CDB 18 °CWB SHC	27 °CDB 19 °CWB TC	27 °CDB 19 °CWB SHC	28 °CDB 20 °CWB TC	28 °CDB 20 °CWB SHC	31 °CDB 22 °CWB TC	31 °CDB 22 °CWB SHC	33 °CDB 24 °CWB TC	33 °CDB 24 °CWB SHC
	10			7.38	5.45	8.82	6.19	9.54	6.35	10.15	6.47	11.37	6.97	11.80	6.77
	12			7.38	5.45	8.82	6.19	9.54	6.35	10.14	6.47	11.33	6.95	11.75	6.75
	14			7.38	5.45	8.82	6.19	9.54	6.35	10.12	6.45	11.29	6.94	11.70	6.71
	16			7.38	5.45	8.82	6.19	9.54	6.35	10.11	6.45	11.25	6.92	11.65	6.69
	18			7.38	5.45	8.82	6.19	9.54	6.35	10.09	6.44	11.20	6.90	11.60	6.68
Hi	20			7.38	5.45	8.82	6.19	9.54	6.35	10.08	6.44	11.16	6.89	11.55	6.66
	22			7.37	5.45	8.82	6.19	9.54	6.35	10.03	6.42	11.02	6.81	11.39	6.61
20	24			7.36	5.45	8.81	6.18	9.54	6.35	9.99	6.39	10.88	6.76	11.24	6.56
(m³/min)	26			7.35	5.44	8.77	6.17	9.45	6.32	9.87	6.33	10.71	6.69	11.06	6.48
	28	6.66	5.35	7.34	5.44	8.73	6.14	9.36	6.27	9.75	6.29	10.54	6.62	10.89	6.41
	30	6.66	5.35	7.33	5.43	8.66	6.11	9.27	6.24	9.64	6.24	10.38	6.56	10.73	6.35
	32	6.66	5.35	7.31	5.41	8.60	6.09	9.18	6.19	9.53	6.19	10.22	6.49	10.56	6.29
	34	6.66	5.35	7.28	5.40	8.57	6.07	9.06	6.14	9.37	6.12	10.00	6.40	10.35	6.22
	35	6.66	5.35	7.27	5.40	8.55	6.06	9.00	6.12	9.30	6.09	9.89	6.35	10.24	6.15
	36	6.66	5.35	7.26	5.39	8.49	6.04	8.96	6.10	9.21	6.05	9.72	6.26	10.04	6.09
	38	6.66	5.35	7.25	5.39	8.36	5.97	8.87	6.06	9.03	5.98	9.36	6.14	9.64	5.95
	39	6.66	5.35	7.24	5.39	8.29	5.94	8.82	6.04	8.94	5.94	9.18	6.07	9.44	5.87
	41	6.66	5.35	7.21	5.37	8.04	5.81	8.46	5.87	8.56	5.78	8.77	5.90	9.00	5.72
	43	6.66	5.35	7.19	5.36	7.80	5.71	8.10	5.71	8.19	5.61	8.37	5.75	8.56	5.57

Air flow	Ambient air temp. DB	Ambient air temp. WB	Indoor air temp. 16 °CDB	18 °CDB	20 °CDB	22 °CDB	24 °CDB
	-19.8	-20	5.80	5.80	5.80	5.80	5.80
	-17.8	-18	6.17	6.17	6.17	6.17	6.17
	-15.7	-16	6.55	6.55	6.55	6.55	6.55
	-13.7	-14	6.92	6.92	6.92	6.92	6.92
	-11.7	-12	7.29	7.29	7.29	7.29	7.29
Hi	-9.6	-10	7.67	7.67	7.67	7.67	7.67
	-7.5	-8	8.13	8.13	8.13	8.13	8.13
20	-5.5	-6	8.60	8.60	8.60	8.60	8.60
(m³/min)	-3.4	-4	8.90	8.89	8.88	8.79	8.70
	-1.3	-2	9.20	9.18	9.15	8.98	8.80
	0.8	0	9.70	9.56	9.43	9.09	8.75
	3.9	3	10.53	10.15	9.78	9.23	8.68
	7.0	6	11.50	10.75	10.00	9.30	8.60
	10.1	9	11.43	10.69	9.96	9.24	8.53
	13.2	12	11.35	10.63	9.90	9.18	8.45
	16.9	15.5	11.26	10.54	9.81	9.09	8.36

Air flow	Ambient air temp. (°CDB)	Indoor air temperature 21 °CDB 14 °CWB TC	21 °CDB 14 °CWB SHC	23 °CDB 16 °CWB TC	23 °CDB 16 °CWB SHC	26 °CDB 18 °CWB TC	26 °CDB 18 °CWB SHC	27 °CDB 19 °CWB TC	27 °CDB 19 °CWB SHC	28 °CDB 20 °CWB TC	28 °CDB 20 °CWB SHC	31 °CDB 22 °CWB TC	31 °CDB 22 °CWB SHC	33 °CDB 24 °CWB TC	33 °CDB 24 °CWB SHC
	10			6.89	5.02	8.23	5.70	8.90	5.87	9.47	5.98	10.61	6.44	11.02	6.25
	12			6.89	5.02	8.23	5.70	8.90	5.87	9.46	5.98	10.57	6.43	10.97	6.23
	14			6.89	5.02	8.23	5.70	8.90	5.87	9.45	5.96	10.53	6.40	10.92	6.22
	16			6.89	5.02	8.23	5.70	8.90	5.87	9.43	5.96	10.50	6.39	10.88	6.20
	18			6.89	5.02	8.23	5.70	8.90	5.87	9.42	5.95	10.46	6.38	10.83	6.18
Me	20			6.89	5.02	8.23	5.70	8.90	5.87	9.41	5.95	10.42	6.36	10.78	6.15
	22			6.88	5.02	8.23	5.70	8.90	5.87	9.37	5.93	10.29	6.30	10.63	6.10
18	24			6.87	5.01	8.22	5.70	8.90	5.87	9.32	5.91	10.16	6.25	10.49	6.03
(m³/min)	26			6.86	5.01	8.19	5.69	8.82	5.84	9.21	5.86	10.00	6.17	10.33	5.98
	28	6.22	4.93	6.85	5.01	8.15	5.67	8.74	5.80	9.10	5.80	9.84	6.10	10.16	5.91
	30	6.22	4.93	6.84	5.00	8.09	5.64	8.65	5.74	9.00	5.76	9.69	6.05	10.01	5.86
	32	6.22	4.93	6.82	4.99	8.02	5.61	8.57	5.71	8.89	5.70	9.54	5.98	9.86	5.80
	34	6.22	4.93	6.80	4.98	7.99	5.59	8.46	5.67	8.75	5.65	9.33	5.90	9.66	5.72
	35	6.22	4.93	6.79	4.98	7.98	5.58	8.40	5.63	8.68	5.62	9.23	5.85	9.55	5.68
	36	6.22	4.93	6.78	4.98	7.92	5.56	8.36	5.62	8.59	5.58	9.07	5.79	9.37	5.61
	38	6.22	4.93	6.76	4.97	7.80	5.50	8.27	5.58	8.43	5.51	8.74	5.63	9.00	5.47
	39	6.22	4.93	6.75	4.96	7.74	5.48	8.23	5.56	8.34	5.47	8.57	5.58	8.81	5.40
	41	6.22	4.93	6.73	4.95	7.51	5.37	7.90	5.41	7.99	5.32	8.19	5.43	8.40	5.26
	43	6.22	4.93	6.71	4.94	7.28	5.26	7.56	5.26	7.64	5.15	7.81	5.29	7.99	5.11

Air flow	Ambient air temp. DB	Ambient air temp. WB	Indoor air temp. 16 °CDB	18 °CDB	20 °CDB	22 °CDB	24 °CDB
	-19.8	-20	5.34	5.34	5.34	5.34	5.34
	-17.8	-18	5.68	5.68	5.68	5.68	5.68
	-15.7	-16	6.02	6.02	6.02	6.02	6.02
	-13.7	-14	6.37	6.37	6.37	6.37	6.37
	-11.7	-12	6.71	6.71	6.71	6.71	6.71
Me	-9.6	-10	7.05	7.05	7.05	7.05	7.05
	-7.5	-8	7.48	7.48	7.48	7.48	7.48
18	-5.5	-6	7.91	7.91	7.91	7.91	7.91
(m³/min)	-3.4	-4	8.19	8.18	8.17	8.08	8.00
	-1.3	-2	8.46	8.44	8.42	8.26	8.10
	0.8	0	8.92	8.80	8.67	8.36	8.05
	3.9	3	9.68	9.34	8.99	8.49	7.98
	7.0	6	10.58	9.89	9.20	8.56	7.91
	10.1	9	10.51	9.84	9.17	8.50	7.84
	13.2	12	10.44	9.78	9.11	8.44	7.77
	16.9	15.5	10.36	9.69	9.03	8.36	7.69

Air flow	Ambient air temp. (°CDB)	Indoor air temperature 21 °CDB 14 °CWB TC	21 °CDB 14 °CWB SHC	23 °CDB 16 °CWB TC	23 °CDB 16 °CWB SHC	26 °CDB 18 °CWB TC	26 °CDB 18 °CWB SHC	27 °CDB 19 °CWB TC	27 °CDB 19 °CWB SHC	28 °CDB 20 °CWB TC	28 °CDB 20 °CWB SHC	31 °CDB 22 °CWB TC	31 °CDB 22 °CWB SHC	33 °CDB 24 °CWB TC	33 °CDB 24 °CWB SHC
	10			6.07	4.36	7.25	4.96	7.84	5.11	8.35	5.21	9.35	5.61	9.71	5.44
	12			6.07	4.36	7.25	4.96	7.84	5.11	8.33	5.20	9.31	5.59	9.66	5.42
	14			6.07	4.36	7.25	4.96	7.84	5.11	8.32	5.19	9.28	5.58	9.62	5.41
	16			6.07	4.36	7.25	4.96	7.84	5.11	8.31	5.19	9.25	5.56	9.58	5.39
	18			6.07	4.36	7.25	4.96	7.84	5.11	8.30	5.18	9.21	5.55	9.54	5.37
Lo	20			6.07	4.36	7.25	4.96	7.84	5.11	8.29	5.18	9.18	5.54	9.50	5.36
	22			6.06	4.36	7.25	4.96	7.84	5.11	8.25	5.17	9.06	5.48	9.37	5.30
15	24			6.05	4.35	7.25	4.96	7.84	5.11	8.21	5.14	8.95	5.43	9.24	5.25
(m³/min)	26			6.04	4.35	7.21	4.94	7.77	5.07	8.12	5.10	8.81	5.37	9.10	5.19
	28	5.48	4.27	6.04	4.35	7.18	4.93	7.70	5.03	8.02	5.05	8.66	5.29	8.95	5.14
	30	5.48	4.27	6.02	4.34	7.12	4.90	7.62	5.00	7.93	5.01	8.53	5.25	8.82	5.09
	32	5.48	4.27	6.01	4.34	7.07	4.87	7.55	4.97	7.83	4.96	8.40	5.19	8.69	5.03
	34	5.48	4.27	5.99	4.33	7.04	4.86	7.45	4.92	7.71	4.91	8.22	5.11	8.51	4.96
	35	5.48	4.27	5.98	4.32	7.03	4.86	7.40	4.88	7.64	4.88	8.13	5.08	8.42	4.93
	36	5.48	4.27	5.97	4.32	6.98	4.83	7.36	4.88	7.57	4.85	7.99	5.02	8.25	4.86
	38	5.48	4.27	5.96	4.31	6.87	4.78	7.29	4.85	7.42	4.78	7.70	4.90	7.93	4.74
	39	5.48	4.27	5.95	4.30	6.82	4.76	7.25	4.83	7.35	4.75	7.55	4.83	7.76	4.68
	41	5.48	4.27	5.93	4.29	6.61	4.66	6.96	4.70	7.04	4.62	7.21	4.70	7.40	4.55
	43	5.48	4.27	5.91	4.29	6.41	4.55	6.66	4.55	6.73	4.47	6.88	4.57	7.04	4.41

Air flow	Ambient air temp. DB	Ambient air temp. WB	Indoor air temp. 16 °CDB	18 °CDB	20 °CDB	22 °CDB	24 °CDB
	-19.8	-20	4.59	4.59	4.59	4.59	4.59
	-17.8	-18	4.89	4.89	4.89	4.89	4.89
	-15.7	-16	5.18	5.18	5.18	5.18	5.18
	-13.7	-14	5.48	5.48	5.48	5.48	5.48
	-11.7	-12	5.78	5.78	5.78	5.78	5.78
Lo	-9.6	-10	6.07	6.07	6.07	6.07	6.07
	-7.5	-8	6.44	6.44	6.44	6.44	6.44
15	-5.5	-6	6.81	6.81	6.81	6.81	6.81
(m³/min)	-3.4	-4	7.05	7.04	7.03	6.96	6.89
	-1.3	-2	7.29	7.27	7.25	7.11	6.97
	0.8	0	7.68	7.57	7.46	7.20	6.93
	3.9	3	8.34	8.04	7.74	7.31	6.87
	7.0	6	9.11	8.51	7.92	7.37	6.81
	10.1	9	9.05	8.47	7.89	7.32	6.75
	13.2	12	8.99	8.42	7.84	7.27	6.69
	16.9	15.5	8.92	8.35	7.77	7.20	6.62

Note(1) This data shows average statuses out of those possible to occur in the system control.
(Depending on controls, there may be ranges where the operation is not conducted continuously.)

(2) Symbols are as follows
TC :Total cooling capacity(kW)
SHC :Sensible heat capacity(kW)

Cool mode	Uhi	Hi	Me	Lo
Air flow	22.00	20	18	15
TC	9.55	9.00	8.40	7.40
SHF	0.69	0.68	0.67	0.66

Heat mode	Uhi	Hi	Me	Lo
Air flow	22	20	18	15
Heating capacity	10.77	10.00	9.20	7.92

Model **FDUM112KXE6** Cool Mode

Air flow	Ambient air temp. (°CDB)	Indoor air temperature 21 °CDB 14 °CWB TC	21 °CDB 14 °CWB SHC	23 °CDB 16 °CWB TC	23 °CDB 16 °CWB SHC	26 °CDB 18 °CWB TC	26 °CDB 18 °CWB SHC	27 °CDB 19 °CWB TC	27 °CDB 19 °CWB SHC	28 °CDB 20 °CWB TC	28 °CDB 20 °CWB SHC	31 °CDB 22 °CWB TC	31 °CDB 22 °CWB SHC	33 °CDB 24 °CWB TC	33 °CDB 24 °CWB SHC
Uhi	10			9.88	7.75	11.81	8.78	12.77	8.99	13.59	9.12	15.22	9.85	15.81	9.59
	12			9.88	7.75	11.81	8.78	12.77	8.99	13.57	9.12	15.17	9.82	15.74	9.55
	14			9.88	7.75	11.81	8.78	12.77	8.99	13.55	9.11	15.11	9.80	15.67	9.53
	16			9.88	7.75	11.81	8.78	12.77	8.99	13.53	9.10	15.06	9.78	15.60	9.51
	18			9.88	7.75	11.81	8.78	12.77	8.99	13.52	9.10	15.00	9.76	15.53	9.49
	20			9.88	7.75	11.81	8.78	12.77	8.99	13.50	9.09	14.95	9.74	15.46	9.45
	22			9.86	7.74	11.80	8.78	12.77	8.99	13.43	9.06	14.76	9.66	15.25	9.38
31	24			9.85	7.74	11.80	8.78	12.77	8.99	13.37	9.03	14.57	9.58	15.04	9.30
(m^3/min)	26			9.84	7.74	11.74	8.75	12.65	8.94	13.21	8.97	14.34	9.49	14.81	9.22
	28	8.92	7.64	9.83	7.73	11.69	8.73	12.53	8.88	13.06	8.90	14.11	9.41	14.58	9.13
	30	8.92	7.64	9.81	7.72	11.60	8.68	12.41	8.84	12.91	8.84	13.89	9.32	14.36	9.06
	32	8.92	7.64	9.78	7.71	11.51	8.65	12.29	8.79	12.75	8.77	13.68	9.24	14.14	8.98
	34	8.92	7.64	9.75	7.70	11.47	8.63	12.13	8.72	12.55	8.68	13.39	9.12	13.85	8.84
	35	8.92	7.64	9.74	7.69	11.45	8.63	12.05	8.68	12.45	8.65	13.25	9.08	13.71	8.80
	36	8.92	7.64	9.72	7.69	11.36	8.58	11.99	8.66	12.33	8.60	13.01	8.95	13.44	8.72
	38	8.92	7.64	9.70	7.68	11.19	8.51	11.87	8.60	12.09	8.50	12.53	8.79	12.91	8.56
	39	8.92	7.64	9.69	7.67	11.10	8.47	11.81	8.58	11.97	8.46	12.29	8.71	12.64	8.46
	41	8.92	7.64	9.65	7.66	10.77	8.33	11.33	8.39	11.47	8.25	11.75	8.51	12.05	8.27
	43	8.92	7.64	9.62	7.64	10.44	8.16	10.85	8.15	10.96	8.02	11.20	8.31	11.46	8.07

Heat Mode

Air flow	Ambient air temp. DB	Ambient air temp. WB	Indoor air temp. 16 °CDB	18 °CDB	20 °CDB	22 °CDB	24 °CDB
Uhi	-19.8	-20	7.89	7.89	7.89	7.89	7.89
	-17.8	-18	8.40	8.40	8.40	8.40	8.40
	-15.7	-16	8.90	8.90	8.90	8.90	8.90
	-13.7	-14	9.41	9.41	9.41	9.41	9.41
	-11.7	-12	9.92	9.92	9.92	9.92	9.92
	-9.6	-10	10.43	10.43	10.43	10.43	10.43
	-7.5	-8	11.06	11.06	11.06	11.06	11.06
31	-5.5	-6	11.70	11.70	11.70	11.70	11.70
(m^3/min)	-3.4	-4	12.10	12.09	12.07	11.95	11.83
	-1.3	-2	12.51	12.48	12.44	12.21	11.97
	0.8	0	13.19	13.01	12.82	12.36	11.90
	3.9	3	14.31	13.80	13.29	12.55	11.80
	7.0	6	15.64	14.62	13.60	12.65	11.70
	10.1	9	15.54	14.54	13.55	12.57	11.59
	13.2	12	15.44	14.45	13.46	12.48	11.49
	16.9	15.5	15.32	14.33	13.35	12.36	11.37

Air flow	Ambient air temp. (°CDB)	Indoor air temperature 21 °CDB 14 °CWB TC	21 °CDB 14 °CWB SHC	23 °CDB 16 °CWB TC	23 °CDB 16 °CWB SHC	26 °CDB 18 °CWB TC	26 °CDB 18 °CWB SHC	27 °CDB 19 °CWB TC	27 °CDB 19 °CWB SHC	28 °CDB 20 °CWB TC	28 °CDB 20 °CWB SHC	31 °CDB 22 °CWB TC	31 °CDB 22 °CWB SHC	33 °CDB 24 °CWB TC	33 °CDB 24 °CWB SHC
Hi	10			9.18	7.23	10.97	8.18	11.87	8.38	12.63	8.50	14.15	9.14	14.69	8.91
	12			9.18	7.23	10.97	8.18	11.87	8.38	12.61	8.49	14.10	9.12	14.63	8.89
	14			9.18	7.23	10.97	8.18	11.87	8.38	12.60	8.49	14.05	9.11	14.56	8.87
	16			9.18	7.23	10.97	8.18	11.87	8.38	12.58	8.48	14.00	9.09	14.50	8.85
	18			9.18	7.23	10.97	8.18	11.87	8.38	12.56	8.47	13.94	9.07	14.44	8.83
	20			9.18	7.23	10.97	8.18	11.87	8.38	12.55	8.47	13.89	9.05	14.37	8.80
	22			9.17	7.22	10.97	8.18	11.87	8.38	12.49	8.44	13.72	8.99	14.18	8.74
28	24			9.15	7.21	10.97	8.18	11.87	8.38	12.43	8.41	13.54	8.93	13.98	8.67
(m^3/min)	26			9.15	7.21	10.92	8.15	11.76	8.33	12.28	8.35	13.33	8.84	13.77	8.58
	28	8.29	7.11	9.14	7.21	10.86	8.12	11.65	8.28	12.14	8.29	13.11	8.76	13.55	8.52
	30	8.29	7.11	9.12	7.20	10.78	8.09	11.54	8.24	12.00	8.23	12.91	8.68	13.35	8.44
	32	8.29	7.11	9.09	7.19	10.70	8.06	11.42	8.18	11.85	8.17	12.71	8.60	13.15	8.37
	34	8.29	7.11	9.06	7.17	10.66	8.04	11.27	8.12	11.66	8.09	12.45	8.51	12.87	8.27
	35	8.29	7.11	9.05	7.17	10.64	8.03	11.20	8.06	11.57	8.06	12.31	8.45	12.74	8.23
	36	8.29	7.11	9.04	7.17	10.56	7.99	11.14	8.06	11.46	8.02	12.09	8.37	12.49	8.14
	38	8.29	7.11	9.02	7.15	10.40	7.93	11.03	8.02	11.24	7.92	11.65	8.21	12.00	7.97
	39	8.29	7.11	9.00	7.14	10.32	7.89	10.98	8.00	11.13	7.88	11.43	8.12	11.75	7.88
	41	8.29	7.11	8.97	7.12	10.01	7.76	10.53	7.81	10.66	7.68	10.92	7.93	11.20	7.67
	43	8.29	7.11	8.94	7.11	9.70	7.62	10.08	7.63	10.19	7.50	10.41	7.72	10.65	7.50

Air flow	Ambient air temp. DB	Ambient air temp. WB	Indoor air temp. 16 °CDB	18 °CDB	20 °CDB	22 °CDB	24 °CDB
Hi	-19.8	-20	7.25	7.25	7.25	7.25	7.25
	-17.8	-18	7.72	7.72	7.72	7.72	7.72
	-15.7	-16	8.18	8.18	8.18	8.18	8.18
	-13.7	-14	8.65	8.65	8.65	8.65	8.65
	-11.7	-12	9.12	9.12	9.12	9.12	9.12
	-9.6	-10	9.58	9.58	9.58	9.58	9.58
	-7.5	-8	10.17	10.17	10.17	10.17	10.17
28	-5.5	-6	10.75	10.75	10.75	10.75	10.75
(m^3/min)	-3.4	-4	11.13	11.11	11.09	10.98	10.88
	-1.3	-2	11.50	11.47	11.44	11.22	11.00
	0.8	0	12.13	11.95	11.78	11.36	10.94
	3.9	3	13.16	12.69	12.22	11.53	10.84
	7.0	6	14.38	13.44	12.50	11.63	10.75
	10.1	9	14.28	13.37	12.45	11.55	10.66
	13.2	12	14.19	13.28	12.38	11.47	10.56
	16.9	15.5	14.08	13.17	12.27	11.36	10.45

Air flow	Ambient air temp. (°CDB)	Indoor air temperature 21 °CDB 14 °CWB TC	21 °CDB 14 °CWB SHC	23 °CDB 16 °CWB TC	23 °CDB 16 °CWB SHC	26 °CDB 18 °CWB TC	26 °CDB 18 °CWB SHC	27 °CDB 19 °CWB TC	27 °CDB 19 °CWB SHC	28 °CDB 20 °CWB TC	28 °CDB 20 °CWB SHC	31 °CDB 22 °CWB TC	31 °CDB 22 °CWB SHC	33 °CDB 24 °CWB TC	33 °CDB 24 °CWB SHC
Me	10			8.43	6.53	10.07	7.38	10.90	7.57	11.59	7.69	12.99	8.30	13.48	8.07
	12			8.43	6.53	10.07	7.38	10.90	7.57	11.58	7.68	12.94	8.27	13.43	8.05
	14			8.43	6.53	10.07	7.38	10.90	7.57	11.56	7.68	12.89	8.25	13.37	8.03
	16			8.43	6.53	10.07	7.38	10.90	7.57	11.55	7.67	12.85	8.24	13.31	8.01
	18			8.43	6.53	10.07	7.38	10.90	7.57	11.53	7.67	12.80	8.22	13.25	7.99
	20			8.43	6.53	10.07	7.38	10.90	7.57	11.52	7.66	12.75	8.21	13.19	7.96
	22			8.41	6.52	10.07	7.38	10.90	7.57	11.46	7.64	12.59	8.13	13.01	7.90
25	24			8.40	6.52	10.07	7.38	10.90	7.57	11.41	7.61	12.43	8.07	12.83	7.83
(m^3/min)	26			8.40	6.52	10.02	7.36	10.79	7.53	11.27	7.56	12.23	7.99	12.64	7.73
	28	7.61	6.42	8.39	6.51	9.97	7.34	10.69	7.49	11.14	7.50	12.04	7.92	12.44	7.66
	30	7.61	6.42	8.37	6.49	9.89	7.30	10.59	7.44	11.01	7.45	11.85	7.82	12.25	7.60
	32	7.61	6.42	8.35	6.49	9.82	7.28	10.49	7.38	10.88	7.38	11.67	7.75	12.07	7.55
	34	7.61	6.42	8.32	6.47	9.78	7.26	10.35	7.32	10.71	7.30	11.42	7.67	11.82	7.46
	35	7.61	6.42	8.31	6.47	9.77	7.26	10.28	7.30	10.62	7.26	11.30	7.63	11.69	7.42
	36	7.61	6.42	8.30	6.46	9.69	7.22	10.23	7.28	10.52	7.23	11.10	7.55	11.47	7.34
	38	7.61	6.42	8.28	6.46	9.55	7.16	10.13	7.24	10.31	7.15	10.69	7.40	11.01	7.18
	39	7.61	6.42	8.27	6.45	9.47	7.12	10.07	7.22	10.21	7.11	10.49	7.32	10.78	7.10
	41	7.61	6.42	8.24	6.44	9.19	7.00	9.66	7.05	9.78	6.93	10.02	7.15	10.28	6.93
	43	7.61	6.42	8.21	6.43	8.90	6.88	9.25	6.87	9.35	6.76	9.56	6.97	9.77	6.77

Air flow	Ambient air temp. DB	Ambient air temp. WB	Indoor air temp. 16 °CDB	18 °CDB	20 °CDB	22 °CDB	24 °CDB
Me	-19.8	-20	6.59	6.59	6.59	6.59	6.59
	-17.8	-18	7.01	7.01	7.01	7.01	7.01
	-15.7	-16	7.44	7.44	7.44	7.44	7.44
	-13.7	-14	7.86	7.86	7.86	7.86	7.86
	-11.7	-12	8.29	8.29	8.29	8.29	8.29
	-9.6	-10	8.71	8.71	8.71	8.71	8.71
	-7.5	-8	9.24	9.24	9.24	9.24	9.24
25	-5.5	-6	9.77	9.77	9.77	9.77	9.77
(m^3/min)	-3.4	-4	10.11	10.10	10.08	9.98	9.88
	-1.3	-2	10.45	10.42	10.39	10.20	10.00
	0.8	0	11.02	10.86	10.71	10.32	9.94
	3.9	3	11.96	11.53	11.10	10.48	9.85
	7.0	6	13.06	12.21	11.36	10.56	9.77
	10.1	9	12.98	12.15	11.32	10.50	9.68
	13.2	12	12.89	12.07	11.25	10.42	9.60
	16.9	15.5	12.79	11.97	11.15	10.32	9.50

Air flow	Ambient air temp. (°CDB)	Indoor air temperature 21 °CDB 14 °CWB TC	21 °CDB 14 °CWB SHC	23 °CDB 16 °CWB TC	23 °CDB 16 °CWB SHC	26 °CDB 18 °CWB TC	26 °CDB 18 °CWB SHC	27 °CDB 19 °CWB TC	27 °CDB 19 °CWB SHC	28 °CDB 20 °CWB TC	28 °CDB 20 °CWB SHC	31 °CDB 22 °CWB TC	31 °CDB 22 °CWB SHC	33 °CDB 24 °CWB TC	33 °CDB 24 °CWB SHC
Lo	10			7.62	5.86	9.11	6.64	9.86	6.81	10.49	6.91	11.75	7.46	12.20	7.26
	12			7.62	5.86	9.11	6.64	9.86	6.81	10.47	6.91	11.71	7.45	12.15	7.24
	14			7.62	5.86	9.11	6.64	9.86	6.81	10.46	6.90	11.66	7.42	12.09	7.21
	16			7.62	5.86	9.11	6.64	9.86	6.81	10.45	6.90	11.62	7.41	12.04	7.20
	18			7.62	5.86	9.11	6.64	9.86	6.81	10.43	6.87	11.58	7.39	11.99	7.18
	20			7.62	5.86	9.11	6.64	9.86	6.81	10.42	6.87	11.54	7.38	11.94	7.16
	22			7.61	5.86	9.11	6.64	9.86	6.81	10.37	6.85	11.39	7.31	11.77	7.07
22	24			7.60	5.85	9.11	6.64	9.86	6.81	10.32	6.83	11.24	7.25	11.61	7.02
(m^3/min)	26			7.60	5.85	9.06	6.62	9.77	6.77	10.20	6.78	11.07	7.17	11.43	6.96
	28	6.88	5.77	7.59	5.85	9.02	6.60	9.67	6.73	10.08	6.74	10.89	7.10	11.25	6.91
	30	6.88	5.77	7.57	5.84	8.95	6.57	9.58	6.70	9.96	6.69	10.72	7.04	11.08	6.84
	32	6.88	5.77	7.55	5.83	8.88	6.54	9.49	6.65	9.84	6.64	10.56	6.99	10.92	6.79
	34	6.88	5.77	7.53	5.82	8.85	6.52	9.36	6.60	9.69	6.58	10.33	6.90	10.69	6.71
	35	6.88	5.77	7.51	5.81	8.84	6.52	9.30	6.51	9.61	6.55	10.22	6.85	10.58	6.66
	36	6.88	5.77	7.51	5.81	8.77	6.49	9.25	6.55	9.52	6.50	10.04	6.78	10.37	6.59
	38	6.88	5.77	7.49	5.81	8.64	6.44	9.16	6.51	9.33	6.43	9.67	6.63	9.96	6.44
	39	6.88	5.77	7.48	5.80	8.57	6.40	9.11	6.49	9.24	6.39	9.49	6.57	9.76	6.38
	41	6.88	5.77	7.45	5.79	8.31	6.28	8.74	6.33	8.85	6.23	9.07	6.41	9.30	6.21
	43	6.88	5.77	7.42	5.78	8.05	6.18	8.37	6.17	8.46	6.08	8.65	6.26	8.84	6.04

Air flow	Ambient air temp. DB	Ambient air temp. WB	Indoor air temp. 16 °CDB	18 °CDB	20 °CDB	22 °CDB	24 °CDB
Lo	-19.8	-20	5.90	5.90	5.90	5.90	5.90
	-17.8	-18	6.28	6.28	6.28	6.28	6.28
	-15.7	-16	6.66	6.66	6.66	6.66	6.66
	-13.7	-14	7.04	7.04	7.04	7.04	7.04
	-11.7	-12	7.42	7.42	7.42	7.42	7.42
	-9.6	-10	7.80	7.80	7.80	7.80	7.80
	-7.5	-8	8.27	8.27	8.27	8.27	8.27
22	-5.5	-6	8.75	8.75	8.75	8.75	8.75
(m^3/min)	-3.4	-4	9.05	9.04	9.03	8.94	8.85
	-1.3	-2	9.36	9.33	9.31	9.13	8.95
	0.8	0	9.86	9.73	9.59	9.24	8.90
	3.9	3	10.70	10.32	9.94	9.38	8.82
	7.0	6	11.70	10.93	10.17	9.46	8.75
	10.1	9	11.62	10.88	10.13	9.40	8.67
	13.2	12	11.54	10.81	10.07	9.33	8.59
	16.9	15.5	11.45	10.72	9.98	9.24	8.50

Note(1) This data shows average statuses out of those possible to occur in the system control.
(Depending on controls, there may be ranges where the operation is not conducted continuously.)

(2) Symbols are as follows
TC :Total cooling capacity(kW)
SHC :Sensible heat capacity(kW)

Cool mode	Uhi	Hi	Me	Lo
Air flow	31.00	28	25	22
TC	12.05	11.20	10.28	9.30
SHF	0.72	0.72	0.71	0.70

Heat mode	Uhi	Hi	Me	Lo
Air flow	31	28	25	22
Heating capacity	13.60	12.50	11.36	10.17

Model **FDUM140KXE6** Cool Mode

Air flow	Ambient air temp. (°CDB)	Indoor air temperature 21 °CDB 14 °CWB TC	21 °CDB 14 °CWB SHC	23 °CDB 16 °CWB TC	23 °CDB 16 °CWB SHC	26 °CDB 18 °CWB TC	26 °CDB 18 °CWB SHC	27 °CDB 19 °CWB TC	27 °CDB 19 °CWB SHC	28 °CDB 20 °CWB TC	28 °CDB 20 °CWB SHC	31 °CDB 22 °CWB TC	31 °CDB 22 °CWB SHC	33 °CDB 24 °CWB TC	33 °CDB 24 °CWB SHC
Uhi	10			12.36	9.58	14.78	10.84	15.98	11.12	17.01	11.29	19.05	12.17	19.78	11.85
	12			12.36	9.58	14.78	10.84	15.98	11.12	16.98	11.28	18.98	12.15	19.69	11.82
	14			12.36	9.58	14.78	10.84	15.98	11.12	16.96	11.27	18.91	12.12	19.61	11.73
	16			12.36	9.58	14.78	10.84	15.98	11.12	16.94	11.26	18.84	12.08	19.52	11.70
	18			12.36	9.58	14.78	10.84	15.98	11.12	16.91	11.25	18.77	12.06	19.44	11.68
	20			12.36	9.58	14.78	10.84	15.98	11.12	16.89	11.24	18.71	12.04	19.35	11.65
	22			12.34	9.57	14.77	10.84	15.98	11.12	16.81	11.19	18.47	11.90	19.09	11.57
38	24			12.33	9.57	14.77	10.84	15.98	11.12	16.73	11.17	18.23	11.82	18.83	11.49
(m³/min)	26			12.32	9.56	14.70	10.81	15.83	11.06	16.54	11.10	17.94	11.72	18.54	11.39
	28	11.16	9.42	12.31	9.56	14.63	10.78	15.68	10.95	16.34	11.01	17.66	11.61	18.25	11.28
	30	11.16	9.42	12.28	9.54	14.51	10.74	15.53	10.89	16.15	10.92	17.39	11.52	17.97	11.17
	32	11.16	9.42	12.24	9.53	14.40	10.68	15.38	10.84	15.96	10.81	17.12	11.41	17.70	11.09
	34	11.16	9.42	12.20	9.51	14.35	10.66	15.18	10.76	15.71	10.72	16.76	11.27	17.33	10.96
	35	11.16	9.42	12.18	9.50	14.33	10.65	15.08	10.71	15.58	10.67	16.58	11.19	17.15	10.89
	36	11.16	9.42	12.17	9.50	14.22	10.61	15.00	10.69	15.43	10.62	16.28	11.07	16.82	10.77
	38	11.16	9.42	12.14	9.47	14.00	10.50	14.85	10.64	15.13	10.50	15.68	10.86	16.15	10.55
	39	11.16	9.42	12.12	9.46	13.89	10.46	14.78	10.59	14.98	10.44	15.39	10.74	15.82	10.39
	41	11.16	9.42	12.08	9.44	13.48	10.28	14.18	10.35	14.35	10.18	14.70	10.46	15.08	10.17
	43	11.16	9.42	12.04	9.43	13.06	10.10	13.57	10.09	13.72	9.94	14.02	10.24	14.34	9.94

Heat Mode

Air flow	Ambient air temp. DB	Ambient air temp. WB	Indoor air temp. 16 °CDB	18 °CDB	20 °CDB	22 °CDB	24 °CDB
Uhi	-19.8	-20	10.12	10.12	10.12	10.12	10.12
	-17.8	-18	10.77	10.77	10.77	10.77	10.77
	-15.7	-16	11.42	11.42	11.42	11.42	11.42
	-13.7	-14	12.08	12.08	12.08	12.08	12.08
	-11.7	-12	12.73	12.73	12.73	12.73	12.73
	-9.6	-10	13.38	13.38	13.38	13.38	13.38
	-7.5	-8	14.19	14.19	14.19	14.19	14.19
38	-5.5	-6	15.01	15.01	15.01	15.01	15.01
(m³/min)	-3.4	-4	15.53	15.51	15.49	15.33	15.18
	-1.3	-2	16.05	16.01	15.97	15.66	15.36
	0.8	0	16.93	16.69	16.45	15.86	15.27
	3.9	3	18.37	17.71	17.06	16.10	15.14
	7.0	6	20.07	18.76	17.45	16.23	15.01
	10.1	9	19.94	18.66	17.38	16.13	14.88
	13.2	12	19.81	18.54	17.28	16.01	14.75
	16.9	15.5	19.65	18.39	17.12	15.86	14.59

Air flow	Ambient air temp. (°CDB)	Indoor air temperature 21 °CDB 14 °CWB TC	21 °CDB 14 °CWB SHC	23 °CDB 16 °CWB TC	23 °CDB 16 °CWB SHC	26 °CDB 18 °CWB TC	26 °CDB 18 °CWB SHC	27 °CDB 19 °CWB TC	27 °CDB 19 °CWB SHC	28 °CDB 20 °CWB TC	28 °CDB 20 °CWB SHC	31 °CDB 22 °CWB TC	31 °CDB 22 °CWB SHC	33 °CDB 24 °CWB TC	33 °CDB 24 °CWB SHC
Hi	10			11.48	8.80	13.72	9.97	14.84	10.21	15.79	10.39	17.69	11.20	18.36	10.85
	12			11.48	8.80	13.72	9.97	14.84	10.21	15.77	10.38	17.62	11.17	18.28	10.83
	14			11.48	8.80	13.72	9.97	14.84	10.21	15.75	10.37	17.56	11.15	18.20	10.80
	16			11.48	8.80	13.72	9.97	14.84	10.21	15.72	10.36	17.49	11.13	18.13	10.78
	18			11.48	8.80	13.72	9.97	14.84	10.21	15.70	10.35	17.43	11.09	18.05	10.76
	20			11.48	8.80	13.72	9.97	14.84	10.21	15.68	10.34	17.37	11.03	17.97	10.73
	22			11.46	8.79	13.71	9.96	14.84	10.21	15.61	10.32	17.15	10.96	17.72	10.65
34	24			11.44	8.79	13.71	9.96	14.84	10.21	15.54	10.27	16.93	10.88	17.48	10.56
(m³/min)	26			11.43	8.78	13.64	9.93	14.70	10.16	15.35	10.17	16.66	10.79	17.21	10.46
	28	10.36	8.65	11.42	8.78	13.58	9.91	14.56	10.10	15.17	10.11	16.39	10.68	16.94	10.36
	30	10.36	8.65	11.40	8.77	13.48	9.87	14.42	10.05	14.99	10.04	16.14	10.58	16.69	10.28
	32	10.36	8.65	11.37	8.76	13.37	9.81	14.28	9.98	14.82	9.98	15.89	10.48	16.43	10.18
	34	10.36	8.65	11.33	8.74	13.32	9.79	14.09	9.91	14.58	9.87	15.56	10.35	16.09	10.06
	35	10.36	8.65	11.31	8.73	13.30	9.78	14.00	9.80	14.46	9.83	15.39	10.28	15.92	9.99
	36	10.36	8.65	11.30	8.73	13.20	9.74	13.93	9.83	14.32	9.76	15.11	10.17	15.61	9.88
	38	10.36	8.65	11.27	8.70	13.00	9.65	13.79	9.78	14.05	9.64	14.56	9.97	15.00	9.64
	39	10.36	8.65	11.26	8.70	12.90	9.61	13.72	9.73	13.91	9.59	14.28	9.82	14.69	9.55
	41	10.36	8.65	11.22	8.68	12.51	9.44	13.16	9.51	13.32	9.35	13.65	9.61	14.00	9.32
	43	10.36	8.65	11.18	8.66	12.13	9.28	12.60	9.26	12.74	9.12	13.02	9.39	13.31	9.10

Air flow	Ambient air temp. DB	Ambient air temp. WB	Indoor air temp. 16 °CDB	18 °CDB	20 °CDB	22 °CDB	24 °CDB
Hi	-19.8	-20	9.28	9.28	9.28	9.28	9.28
	-17.8	-18	9.88	9.88	9.88	9.88	9.88
	-15.7	-16	10.47	10.47	10.47	10.47	10.47
	-13.7	-14	11.07	11.07	11.07	11.07	11.07
	-11.7	-12	11.67	11.67	11.67	11.67	11.67
	-9.6	-10	12.27	12.27	12.27	12.27	12.27
	-7.5	-8	13.01	13.01	13.01	13.01	13.01
34	-5.5	-6	13.76	13.76	13.76	13.76	13.76
(m³/min)	-3.4	-4	14.24	14.22	14.20	14.06	13.92
	-1.3	-2	14.72	14.68	14.64	14.36	14.08
	0.8	0	15.52	15.30	15.08	14.54	14.00
	3.9	3	16.84	16.24	15.64	14.76	13.88
	7.0	6	18.40	17.20	16.00	14.88	13.76
	10.1	9	18.28	17.11	15.94	14.79	13.64
	13.2	12	18.16	17.00	15.84	14.68	13.52
	16.9	15.5	18.02	16.86	15.70	14.54	13.38

Air flow	Ambient air temp. (°CDB)	Indoor air temperature 21 °CDB 14 °CWB TC	21 °CDB 14 °CWB SHC	23 °CDB 16 °CWB TC	23 °CDB 16 °CWB SHC	26 °CDB 18 °CWB TC	26 °CDB 18 °CWB SHC	27 °CDB 19 °CWB TC	27 °CDB 19 °CWB SHC	28 °CDB 20 °CWB TC	28 °CDB 20 °CWB SHC	31 °CDB 22 °CWB TC	31 °CDB 22 °CWB SHC	33 °CDB 24 °CWB TC	33 °CDB 24 °CWB SHC
Me	10			10.75	8.09	12.86	9.17	13.91	9.41	14.80	9.57	16.57	10.32	17.21	10.01
	12			10.75	8.09	12.86	9.17	13.91	9.41	14.78	9.56	16.51	10.29	17.13	9.99
	14			10.75	8.09	12.86	9.17	13.91	9.41	14.76	9.55	16.45	10.24	17.06	9.97
	16			10.75	8.09	12.86	9.17	13.91	9.41	14.74	9.55	16.39	10.22	16.99	9.95
	18			10.75	8.09	12.86	9.17	13.91	9.41	14.72	9.54	16.33	10.20	16.91	9.92
	20			10.75	8.09	12.86	9.17	13.91	9.41	14.70	9.53	16.27	10.18	16.84	9.90
	22			10.74	8.09	12.85	9.17	13.91	9.41	14.63	9.51	16.07	10.11	16.61	9.80
31	24			10.72	8.08	12.85	9.17	13.91	9.41	14.56	9.47	15.86	10.02	16.38	9.71
(m³/min)	26			10.72	8.08	12.79	9.14	13.78	9.36	14.39	9.37	15.61	9.92	16.13	9.62
	28	9.71	7.94	10.71	8.06	12.73	9.12	13.64	9.31	14.22	9.31	15.36	9.82	15.88	9.52
	30	9.71	7.94	10.68	8.05	12.63	9.06	13.51	9.24	14.05	9.25	15.13	9.73	15.64	9.44
	32	9.71	7.94	10.65	8.04	12.53	9.03	13.38	9.18	13.89	9.18	14.89	9.64	15.40	9.35
	34	9.71	7.94	10.62	8.02	12.49	9.01	13.21	9.11	13.66	9.08	14.58	9.50	15.08	9.20
	35	9.71	7.94	10.60	8.02	12.46	9.00	13.12	9.05	13.55	9.04	14.42	9.43	14.92	9.15
	36	9.71	7.94	10.59	8.01	12.37	8.95	13.05	9.04	13.42	8.98	14.16	9.31	14.63	9.07
	38	9.71	7.94	10.56	8.00	12.18	8.86	12.92	8.98	13.16	8.87	13.64	9.13	14.05	8.86
	39	9.71	7.94	10.55	8.00	12.09	8.82	12.86	8.95	13.03	8.80	13.39	9.03	13.76	8.76
	41	9.71	7.94	10.51	7.98	11.73	8.67	12.33	8.73	12.49	8.58	12.79	8.80	13.12	8.54
	43	9.71	7.94	10.47	7.96	11.36	8.48	11.81	8.47	11.94	8.34	12.20	8.58	12.47	8.31

Air flow	Ambient air temp. DB	Ambient air temp. WB	Indoor air temp. 16 °CDB	18 °CDB	20 °CDB	22 °CDB	24 °CDB
Me	-19.8	-20	8.61	8.61	8.61	8.61	8.61
	-17.8	-18	9.17	9.17	9.17	9.17	9.17
	-15.7	-16	9.72	9.72	9.72	9.72	9.72
	-13.7	-14	10.28	10.28	10.28	10.28	10.28
	-11.7	-12	10.83	10.83	10.83	10.83	10.83
	-9.6	-10	11.39	11.39	11.39	11.39	11.39
	-7.5	-8	12.08	12.08	12.08	12.08	12.08
31	-5.5	-6	12.77	12.77	12.77	12.77	12.77
(m³/min)	-3.4	-4	13.22	13.20	13.18	13.05	12.92
	-1.3	-2	13.66	13.62	13.59	13.33	13.07
	0.8	0	14.40	14.20	14.00	13.49	12.99
	3.9	3	15.63	15.07	14.52	13.70	12.88
	7.0	6	17.08	15.96	14.85	13.81	12.77
	10.1	9	16.97	15.88	14.79	13.73	12.66
	13.2	12	16.85	15.78	14.70	13.62	12.55
	16.9	15.5	16.72	15.65	14.57	13.49	12.42

Air flow	Ambient air temp. (°CDB)	Indoor air temperature 21 °CDB 14 °CWB TC	21 °CDB 14 °CWB SHC	23 °CDB 16 °CWB TC	23 °CDB 16 °CWB SHC	26 °CDB 18 °CWB TC	26 °CDB 18 °CWB SHC	27 °CDB 19 °CWB TC	27 °CDB 19 °CWB SHC	28 °CDB 20 °CWB TC	28 °CDB 20 °CWB SHC	31 °CDB 22 °CWB TC	31 °CDB 22 °CWB SHC	33 °CDB 24 °CWB TC	33 °CDB 24 °CWB SHC
Lo	10			9.73	7.31	11.63	8.29	12.58	8.51	13.39	8.65	14.99	9.32	15.57	9.06
	12			9.73	7.31	11.63	8.29	12.58	8.51	13.37	8.65	14.94	9.30	15.50	9.04
	14			9.73	7.31	11.63	8.29	12.58	8.51	13.35	8.64	14.89	9.28	15.44	9.02
	16			9.73	7.31	11.63	8.29	12.58	8.51	13.33	8.63	14.83	9.26	15.37	8.95
	18			9.73	7.31	11.63	8.29	12.58	8.51	13.31	8.62	14.78	9.23	15.30	8.93
	20			9.73	7.31	11.63	8.29	12.58	8.51	13.30	8.62	14.72	9.21	15.23	8.91
	22			9.72	7.31	11.63	8.29	12.58	8.51	13.23	8.58	14.54	9.11	15.03	8.84
27	24			9.70	7.30	11.62	8.29	12.58	8.51	13.17	8.53	14.35	9.04	14.82	8.78
(m³/min)	26			9.69	7.29	11.57	8.25	12.46	8.46	13.02	8.47	14.12	8.96	14.59	8.69
	28	8.78	7.18	9.69	7.29	11.51	8.23	12.34	8.41	12.86	8.41	13.90	8.87	14.36	8.60
	30	8.78	7.18	9.66	7.28	11.42	8.19	12.23	8.35	12.71	8.36	13.69	8.78	14.15	8.52
	32	8.78	7.18	9.64	7.27	11.34	8.15	12.11	8.31	12.56	8.29	13.47	8.69	13.93	8.44
	34	8.78	7.18	9.61	7.26	11.30	8.13	11.95	8.23	12.36	8.20	13.19	8.58	13.64	8.33
	35	8.78	7.18	9.59	7.24	11.28	8.13	11.87	8.19	12.26	8.16	13.05	8.53	13.50	8.29
	36	8.78	7.18	9.58	7.23	11.19	8.09	11.81	8.16	12.14	8.12	12.81	8.44	13.24	8.20
	38	8.78	7.18	9.56	7.23	11.02	8.01	11.69	8.12	11.91	8.02	12.34	8.25	12.71	7.97
	39	8.78	7.18	9.54	7.22	10.94	7.98	11.63	8.09	11.79	7.96	12.11	8.13	12.45	7.90
	41	8.78	7.18	9.51	7.20	10.61	7.83	11.16	7.89	11.30	7.75	11.57	7.95	11.87	7.70
	43	8.78	7.18	9.48	7.19	10.28	7.67	10.68	7.68	10.80	7.56	11.04	7.76	11.28	7.51

Air flow	Ambient air temp. DB	Ambient air temp. WB	Indoor air temp. 16 °CDB	18 °CDB	20 °CDB	22 °CDB	24 °CDB
Lo	-19.8	-20	7.68	7.68	7.68	7.68	7.68
	-17.8	-18	8.17	8.17	8.17	8.17	8.17
	-15.7	-16	8.67	8.67	8.67	8.67	8.67
	-13.7	-14	9.16	9.16	9.16	9.16	9.16
	-11.7	-12	9.66	9.66	9.66	9.66	9.66
	-9.6	-10	10.15	10.15	10.15	10.15	10.15
	-7.5	-8	10.77	10.77	10.77	10.77	10.77
27	-5.5	-6	11.39	11.39	11.39	11.39	11.39
(m³/min)	-3.4	-4	11.78	11.77	11.75	11.63	11.52
	-1.3	-2	12.18	12.15	12.11	11.88	11.65
	0.8	0	12.84	12.66	12.48	12.03	11.59
	3.9	3	13.94	13.44	12.94	12.21	11.49
	7.0	6	15.23	14.23	13.24	12.31	11.39
	10.1	9	15.13	14.16	13.19	12.24	11.29
	13.2	12	15.03	14.07	13.11	12.15	11.19
	16.9	15.5	14.91	13.95	12.99	12.03	11.07

Note(1) This data shows average statuses out of those possible to occur in the system control.
(Depending on controls, there may be ranges where the operation is not conducted continuously.)
(2) Symbols are as follows
TC :Total cooling capacity(kW)
SHC :Sensible heat capacity(kW)

Cool mode	Uhi	Hi	Me	Lo
Air flow	38.00	34	31	27
TC	15.08	14.00	13.12	11.87
SHF	0.71	0.70	0.69	0.69

Heat mode	Uhi	Hi	Me	Lo
Air flow	38	34	31	27
Heating capacity	17.45	16.00	14.85	13.24

Model **FDE36KXE6** Cool Mode

Air flow	Ambient air temp. (℃DB)	Indoor air temperature 21 ℃CDB 14 ℃CWB TC	21 ℃CDB 14 ℃CWB SHC	23 ℃CDB 16 ℃CWB TC	23 ℃CDB 16 ℃CWB SHC	26 ℃CDB 18 ℃CWB TC	26 ℃CDB 18 ℃CWB SHC	27 ℃CDB 19 ℃CWB TC	27 ℃CDB 19 ℃CWB SHC	28 ℃CDB 20 ℃CWB TC	28 ℃CDB 20 ℃CWB SHC	31 ℃CDB 22 ℃CWB TC	31 ℃CDB 22 ℃CWB SHC	33 ℃CDB 24 ℃CWB TC	33 ℃CDB 24 ℃CWB SHC
Uhi	10			3.14	2.78	3.75	3.13	4.06	3.19	4.32	3.23	4.84	3.49	5.02	3.41
	12			3.14	2.78	3.75	3.13	4.06	3.19	4.31	3.23	4.82	3.49	5.00	3.41
	14			3.14	2.78	3.75	3.13	4.06	3.19	4.31	3.23	4.80	3.48	4.98	3.40
	16			3.14	2.78	3.75	3.13	4.06	3.19	4.30	3.22	4.79	3.48	4.96	3.39
	18			3.14	2.78	3.75	3.13	4.06	3.19	4.30	3.22	4.77	3.47	4.94	3.39
	20			3.14	2.78	3.75	3.13	4.06	3.19	4.29	3.22	4.75	3.46	4.92	3.38
	22			3.14	2.78	3.75	3.13	4.06	3.19	4.27	3.21	4.69	3.44	4.85	3.35
12	24			3.13	2.77	3.75	3.13	4.06	3.19	4.25	3.20	4.63	3.42	4.78	3.33
(m^3/min)	26			3.13	2.77	3.73	3.12	4.02	3.18	4.20	3.18	4.56	3.39	4.71	3.31
	28	2.83	2.72	3.13	2.77	3.72	3.12	3.98	3.16	4.15	3.16	4.48	3.37	4.63	3.28
	30	2.83	2.72	3.12	2.77	3.69	3.11	3.94	3.15	4.10	3.14	4.42	3.35	4.56	3.26
	32	2.83	2.72	3.11	2.76	3.66	3.10	3.91	3.14	4.05	3.13	4.35	3.32	4.50	3.24
	34	2.83	2.72	3.10	2.76	3.64	3.09	3.86	3.12	3.99	3.11	4.26	3.29	4.40	3.21
	35	2.83	2.72	3.09	2.75	3.64	3.09	3.83	3.14	3.96	3.09	4.21	3.27	4.36	3.20
	36	2.83	2.72	3.09	2.75	3.61	3.08	3.81	3.09	3.92	3.07	4.13	3.24	4.27	3.16
	38	2.83	2.72	3.08	2.75	3.56	3.06	3.77	3.08	3.84	3.05	3.98	3.19	4.10	3.11
	39	2.83	2.72	3.08	2.75	3.53	3.05	3.75	3.07	3.80	3.03	3.91	3.17	4.02	3.08
	41	2.83	2.72	3.07	2.74	3.42	3.00	3.60	3.02	3.64	2.97	3.73	3.10	3.83	3.03
	43	2.83	2.72	3.06	2.74	3.32	2.96	3.45	2.95	3.48	2.91	3.56	3.05	3.64	2.96

Heat Mode

Air flow	Ambient air temp. DB	Ambient air temp. WB	Indoor air temp. 16 ℃CDB	18 ℃CDB	20 ℃CDB	22 ℃CDB	24 ℃CDB
Uhi	-19.8	-20	2.48	2.48	2.48	2.48	2.48
	-17.8	-18	2.64	2.64	2.64	2.64	2.64
	-15.7	-16	2.80	2.80	2.80	2.80	2.80
	-13.7	-14	2.96	2.96	2.96	2.96	2.96
	-11.7	-12	3.12	3.12	3.12	3.12	3.12
	-9.6	-10	3.28	3.28	3.28	3.28	3.28
	-7.5	-8	3.48	3.48	3.48	3.48	3.48
12	-5.5	-6	3.68	3.68	3.68	3.68	3.68
(m^3/min)	-3.4	-4	3.81	3.80	3.80	3.76	3.72
	-1.3	-2	3.94	3.93	3.92	3.84	3.77
	0.8	0	4.15	4.09	4.03	3.89	3.75
	3.9	3	4.50	4.34	4.18	3.95	3.71
	7.0	6	4.92	4.60	4.28	3.98	3.68
	10.1	9	4.89	4.58	4.26	3.96	3.65
	13.2	12	4.86	4.55	4.24	3.93	3.62
	16.9	15.5	4.82	4.51	4.20	3.89	3.58

Air flow	Ambient air temp. (℃DB)	Indoor air temperature 21 ℃CDB 14 ℃CWB TC	21 ℃CDB 14 ℃CWB SHC	23 ℃CDB 16 ℃CWB TC	23 ℃CDB 16 ℃CWB SHC	26 ℃CDB 18 ℃CWB TC	26 ℃CDB 18 ℃CWB SHC	27 ℃CDB 19 ℃CWB TC	27 ℃CDB 19 ℃CWB SHC	28 ℃CDB 20 ℃CWB TC	28 ℃CDB 20 ℃CWB SHC	31 ℃CDB 22 ℃CWB TC	31 ℃CDB 22 ℃CWB SHC	33 ℃CDB 24 ℃CWB TC	33 ℃CDB 24 ℃CWB SHC
Hi	10			2.95	2.58	3.53	2.91	3.82	2.97	4.06	3.00	4.55	3.25	4.72	3.16
	12			2.95	2.58	3.53	2.91	3.82	2.97	4.05	2.99	4.53	3.24	4.70	3.16
	14			2.95	2.58	3.53	2.91	3.82	2.97	4.05	2.99	4.51	3.23	4.68	3.15
	16			2.95	2.58	3.53	2.91	3.82	2.97	4.04	2.99	4.50	3.23	4.66	3.15
	18			2.95	2.58	3.53	2.91	3.82	2.97	4.04	2.99	4.48	3.22	4.64	3.14
	20			2.95	2.58	3.53	2.91	3.82	2.97	4.03	2.99	4.47	3.21	4.62	3.13
	22			2.95	2.58	3.53	2.91	3.82	2.97	4.01	2.98	4.41	3.19	4.56	3.12
11	24			2.94	2.57	3.52	2.91	3.82	2.97	3.99	2.97	4.35	3.17	4.49	3.09
(m^3/min)	26			2.94	2.57	3.51	2.90	3.78	2.95	3.95	2.96	4.28	3.15	4.43	3.07
	28	2.66	2.54	2.94	2.57	3.49	2.89	3.74	2.93	3.90	2.94	4.22	3.12	4.36	3.05
	30	2.66	2.54	2.93	2.57	3.47	2.89	3.71	2.92	3.86	2.92	4.15	3.10	4.29	3.03
	32	2.66	2.54	2.92	2.56	3.44	2.87	3.67	2.91	3.81	2.90	4.09	3.08	4.23	3.00
	34	2.66	2.54	2.91	2.56	3.43	2.87	3.62	2.89	3.75	2.88	4.00	3.04	4.14	2.97
	35	2.66	2.54	2.91	2.56	3.42	2.86	3.60	2.88	3.72	2.87	3.96	3.03	4.09	2.96
	36	2.66	2.54	2.91	2.56	3.39	2.85	3.58	2.87	3.68	2.85	3.89	3.01	4.02	2.94
	38	2.66	2.54	2.90	2.55	3.34	2.83	3.55	2.86	3.61	2.82	3.74	2.95	3.86	2.88
	39	2.66	2.54	2.89	2.55	3.32	2.82	3.53	2.85	3.58	2.81	3.67	2.93	3.78	2.86
	41	2.66	2.54	2.88	2.55	3.22	2.79	3.38	2.79	3.43	2.76	3.51	2.87	3.60	2.80
	43	2.66	2.54	2.87	2.54	3.12	2.74	3.24	2.74	3.28	2.70	3.35	2.82	3.42	2.75

Air flow	Ambient air temp. DB	Ambient air temp. WB	Indoor air temp. 16 ℃CDB	18 ℃CDB	20 ℃CDB	22 ℃CDB	24 ℃CDB
Hi	-19.8	-20	2.32	2.32	2.32	2.32	2.32
	-17.8	-18	2.47	2.47	2.47	2.47	2.47
	-15.7	-16	2.62	2.62	2.62	2.62	2.62
	-13.7	-14	2.77	2.77	2.77	2.77	2.77
	-11.7	-12	2.92	2.92	2.92	2.92	2.92
	-9.6	-10	3.07	3.07	3.07	3.07	3.07
	-7.5	-8	3.25	3.25	3.25	3.25	3.25
11	-5.5	-6	3.44	3.44	3.44	3.44	3.44
(m^3/min)	-3.4	-4	3.56	3.56	3.55	3.52	3.48
	-1.3	-2	3.68	3.67	3.66	3.59	3.52
	0.8	0	3.88	3.83	3.77	3.64	3.50
	3.9	3	4.21	4.06	3.91	3.69	3.47
	7.0	6	4.60	4.30	4.00	3.72	3.44
	10.1	9	4.57	4.28	3.99	3.70	3.41
	13.2	12	4.54	4.25	3.96	3.67	3.38
	16.9	15.5	4.51	4.22	3.93	3.64	3.35

Air flow	Ambient air temp. (℃DB)	Indoor air temperature 21 ℃CDB 14 ℃CWB TC	21 ℃CDB 14 ℃CWB SHC	23 ℃CDB 16 ℃CWB TC	23 ℃CDB 16 ℃CWB SHC	26 ℃CDB 18 ℃CWB TC	26 ℃CDB 18 ℃CWB SHC	27 ℃CDB 19 ℃CWB TC	27 ℃CDB 19 ℃CWB SHC	28 ℃CDB 20 ℃CWB TC	28 ℃CDB 20 ℃CWB SHC	31 ℃CDB 22 ℃CWB TC	31 ℃CDB 22 ℃CWB SHC	33 ℃CDB 24 ℃CWB TC	33 ℃CDB 24 ℃CWB SHC
Me	10			2.54	2.19	3.04	2.48	3.29	2.53	3.50	2.56	3.92	2.77	4.07	2.70
	12			2.54	2.19	3.04	2.48	3.29	2.53	3.49	2.56	3.90	2.76	4.05	2.70
	14			2.54	2.19	3.04	2.48	3.29	2.53	3.49	2.56	3.89	2.76	4.03	2.69
	16			2.54	2.19	3.04	2.48	3.29	2.53	3.48	2.55	3.87	2.75	4.01	2.68
	18			2.54	2.19	3.04	2.48	3.29	2.53	3.48	2.55	3.86	2.75	4.00	2.68
	20			2.54	2.19	3.04	2.48	3.29	2.53	3.47	2.55	3.85	2.74	3.98	2.68
	22			2.54	2.19	3.04	2.48	3.29	2.53	3.46	2.55	3.80	2.73	3.92	2.65
9	24			2.53	2.19	3.04	2.48	3.29	2.53	3.44	2.54	3.75	2.71	3.87	2.64
(m^3/min)	26			2.53	2.19	3.02	2.47	3.26	2.52	3.40	2.52	3.69	2.68	3.81	2.62
	28	2.29	2.17	2.53	2.19	3.01	2.47	3.22	2.50	3.36	2.51	3.63	2.66	3.75	2.60
	30	2.29	2.17	2.52	2.19	2.98	2.46	3.19	2.49	3.32	2.49	3.57	2.64	3.69	2.56
	32	2.29	2.17	2.52	2.19	2.96	2.45	3.16	2.48	3.28	2.47	3.52	2.63	3.64	2.55
	34	2.29	2.17	2.51	2.18	2.95	2.45	3.12	2.46	3.23	2.46	3.44	2.58	3.56	2.52
	35	2.29	2.17	2.50	2.18	2.95	2.45	3.10	2.45	3.20	2.45	3.41	2.57	3.53	2.51
	36	2.29	2.17	2.50	2.18	2.92	2.43	3.08	2.45	3.17	2.43	3.35	2.55	3.46	2.49
	38	2.29	2.17	2.50	2.18	2.88	2.41	3.05	2.44	3.11	2.41	3.22	2.51	3.32	2.45
	39	2.29	2.17	2.49	2.17	2.86	2.41	3.04	2.43	3.08	2.40	3.16	2.49	3.25	2.43
	41	2.29	2.17	2.48	2.17	2.77	2.37	2.91	2.38	2.95	2.35	3.02	2.44	3.10	2.38
	43	2.29	2.17	2.47	2.16	2.68	2.34	2.79	2.33	2.82	2.30	2.88	2.40	2.95	2.34

Air flow	Ambient air temp. DB	Ambient air temp. WB	Indoor air temp. 16 ℃CDB	18 ℃CDB	20 ℃CDB	22 ℃CDB	24 ℃CDB
Me	-19.8	-20	1.98	1.98	1.98	1.98	1.98
	-17.8	-18	2.11	2.11	2.11	2.11	2.11
	-15.7	-16	2.23	2.23	2.23	2.23	2.23
	-13.7	-14	2.36	2.36	2.36	2.36	2.36
	-11.7	-12	2.49	2.49	2.49	2.49	2.49
	-9.6	-10	2.61	2.61	2.61	2.61	2.61
	-7.5	-8	2.77	2.77	2.77	2.77	2.77
9	-5.5	-6	2.93	2.93	2.93	2.93	2.93
(m^3/min)	-3.4	-4	3.03	3.03	3.03	3.00	2.97
	-1.3	-2	3.14	3.13	3.12	3.06	3.00
	0.8	0	3.31	3.26	3.21	3.10	2.98
	3.9	3	3.59	3.46	3.33	3.15	2.96
	7.0	6	3.92	3.67	3.41	3.17	2.93
	10.1	9	3.90	3.65	3.40	3.15	2.91
	13.2	12	3.87	3.62	3.38	3.13	2.88
	16.9	15.5	3.84	3.59	3.35	3.10	2.85

Air flow	Ambient air temp. (℃DB)	Indoor air temperature 21 ℃CDB 14 ℃CWB TC	21 ℃CDB 14 ℃CWB SHC	23 ℃CDB 16 ℃CWB TC	23 ℃CDB 16 ℃CWB SHC	26 ℃CDB 18 ℃CWB TC	26 ℃CDB 18 ℃CWB SHC	27 ℃CDB 19 ℃CWB TC	27 ℃CDB 19 ℃CWB SHC	28 ℃CDB 20 ℃CWB TC	28 ℃CDB 20 ℃CWB SHC	31 ℃CDB 22 ℃CWB TC	31 ℃CDB 22 ℃CWB SHC	33 ℃CDB 24 ℃CWB TC	33 ℃CDB 24 ℃CWB SHC
Lo	10			2.08	1.75	2.49	1.98	2.69	2.02	2.86	2.05	3.21	2.21	3.33	2.16
	12			2.08	1.75	2.49	1.98	2.69	2.02	2.86	2.05	3.20	2.21	3.32	2.16
	14			2.08	1.75	2.49	1.98	2.69	2.02	2.86	2.05	3.19	2.21	3.30	2.15
	16			2.08	1.75	2.49	1.98	2.69	2.02	2.85	2.04	3.17	2.20	3.29	2.15
	18			2.08	1.75	2.49	1.98	2.69	2.02	2.85	2.04	3.16	2.20	3.27	2.14
	20			2.08	1.75	2.49	1.98	2.69	2.02	2.85	2.04	3.15	2.19	3.26	2.13
	22			2.08	1.75	2.49	1.98	2.69	2.02	2.83	2.04	3.11	2.18	3.22	2.12
7	24			2.08	1.75	2.49	1.98	2.69	2.02	2.82	2.03	3.07	2.16	3.17	2.10
(m^3/min)	26			2.07	1.75	2.48	1.98	2.67	2.01	2.79	2.02	3.02	2.14	3.12	2.09
	28	1.88	1.73	2.07	1.75	2.46	1.97	2.64	2.00	2.75	2.00	2.97	2.13	3.07	2.07
	30	1.88	1.73	2.07	1.75	2.44	1.96	2.62	2.00	2.72	1.99	2.93	2.11	3.03	2.06
	32	1.88	1.73	2.06	1.75	2.43	1.96	2.59	1.98	2.69	1.98	2.88	2.09	2.98	2.04
	34	1.88	1.73	2.06	1.75	2.42	1.95	2.56	1.97	2.65	1.97	2.82	2.07	2.92	2.02
	35	1.88	1.73	2.05	1.74	2.41	1.95	2.54	1.96	2.62	1.95	2.79	2.06	2.89	2.00
	36	1.88	1.73	2.05	1.74	2.39	1.94	2.53	1.96	2.60	1.94	2.74	2.04	2.83	1.98
	38	1.88	1.73	2.04	1.74	2.36	1.93	2.50	1.95	2.55	1.92	2.64	2.00	2.72	1.95
	39	1.88	1.73	2.04	1.74	2.34	1.92	2.49	1.94	2.52	1.91	2.59	1.98	2.66	1.93
	41	1.88	1.73	2.03	1.73	2.27	1.89	2.39	1.90	2.42	1.88	2.48	1.94	2.54	1.89
	43	1.88	1.73	2.03	1.73	2.20	1.86	2.29	1.86	2.31	1.83	2.36	1.90	2.41	1.85

Air flow	Ambient air temp. DB	Ambient air temp. WB	Indoor air temp. 16 ℃CDB	18 ℃CDB	20 ℃CDB	22 ℃CDB	24 ℃CDB
Lo	-19.8	-20	1.61	1.61	1.61	1.61	1.61
	-17.8	-18	1.71	1.71	1.71	1.71	1.71
	-15.7	-16	1.81	1.81	1.81	1.81	1.81
	-13.7	-14	1.92	1.92	1.92	1.92	1.92
	-11.7	-12	2.02	2.02	2.02	2.02	2.02
	-9.6	-10	2.12	2.12	2.12	2.12	2.12
	-7.5	-8	2.25	2.25	2.25	2.25	2.25
7	-5.5	-6	2.38	2.38	2.38	2.38	2.38
(m^3/min)	-3.4	-4	2.47	2.46	2.46	2.43	2.41
	-1.3	-2	2.55	2.54	2.53	2.49	2.44
	0.8	0	2.69	2.65	2.61	2.52	2.42
	3.9	3	2.92	2.81	2.71	2.56	2.40
	7.0	6	3.19	2.98	2.77	2.58	2.38
	10.1	9	3.16	2.96	2.76	2.56	2.36
	13.2	12	3.14	2.94	2.74	2.54	2.34
	16.9	15.5	3.12	2.92	2.72	2.52	2.32

Note(1) This data shows average statuses out of those possible to occur in the system control.
(Depending on controls, there may be ranges where the operation is not conducted continuously.)
(2) Symbols are as follows
TC :Total cooling capacity(kW)
SHC :Sensible heat capacity(kW)

Cool mode	Uhi	Hi	Me	Lo
Air flow	12.00	11	9	7
TC	3.83	3.60	3.10	2.54
SHF	0.82	0.80	0.79	0.77

Heat mode	Uhi	Hi	Me	Lo
Air flow	12	11	9	7
Heating capacity	4.28	4.00	3.41	2.77

Model **FDE45KXE6** Cool Mode

Air flow	Ambient air temp. (℃DB)	Indoor air temperature 21 ℃DB 14 ℃WB TC	21 ℃DB 14 ℃WB SHC	23 ℃DB 16 ℃WB TC	23 ℃DB 16 ℃WB SHC	26 ℃DB 18 ℃WB TC	26 ℃DB 18 ℃WB SHC	27 ℃DB 19 ℃WB TC	27 ℃DB 19 ℃WB SHC	28 ℃DB 20 ℃WB TC	28 ℃DB 20 ℃WB SHC	31 ℃DB 22 ℃WB TC	31 ℃DB 22 ℃WB SHC	33 ℃DB 24 ℃WB TC	33 ℃DB 24 ℃WB SHC
Uhi	10			3.92	3.16	4.68	3.58	5.07	3.66	5.39	3.70	6.04	4.00	6.27	3.90
	12			3.92	3.16	4.68	3.58	5.07	3.66	5.38	3.69	6.02	4.00	6.24	3.89
	14			3.92	3.16	4.68	3.58	5.07	3.66	5.38	3.69	5.99	3.98	6.22	3.88
	16			3.92	3.16	4.68	3.58	5.07	3.66	5.37	3.69	5.97	3.98	6.19	3.87
	18			3.92	3.16	4.68	3.58	5.07	3.66	5.36	3.69	5.95	3.97	6.16	3.86
	20			3.92	3.16	4.68	3.58	5.07	3.66	5.35	3.68	5.93	3.96	6.13	3.85
	22			3.91	3.16	4.68	3.58	5.07	3.66	5.33	3.68	5.85	3.93	6.05	3.82
12	24			3.91	3.16	4.68	3.58	5.07	3.66	5.30	3.66	5.78	3.90	5.97	3.80
(m³/min)	26			3.90	3.15	4.66	3.57	5.02	3.64	5.24	3.64	5.69	3.87	5.88	3.76
	28	3.54	3.12	3.90	3.15	4.64	3.56	4.97	3.62	5.18	3.62	5.60	3.83	5.78	3.73
	30	3.54	3.12	3.89	3.15	4.60	3.54	4.92	3.60	5.12	3.59	5.51	3.80	5.70	3.70
	32	3.54	3.12	3.88	3.15	4.56	3.52	4.88	3.58	5.06	3.57	5.43	3.77	5.61	3.66
	34	3.54	3.12	3.87	3.14	4.55	3.52	4.81	3.55	4.98	3.54	5.31	3.72	5.49	3.63
	35	3.54	3.12	3.86	3.14	4.54	3.51	4.78	3.54	4.94	3.52	5.25	3.70	5.44	3.61
	36	3.54	3.12	3.86	3.14	4.51	3.50	4.76	3.53	4.89	3.51	5.16	3.67	5.33	3.57
	38	3.54	3.12	3.85	3.13	4.44	3.47	4.71	3.51	4.80	3.47	4.97	3.60	5.12	3.50
	39	3.54	3.12	3.84	3.13	4.40	3.46	4.68	3.49	4.75	3.45	4.88	3.57	5.01	3.47
	41	3.54	3.12	3.83	3.12	4.27	3.40	4.49	3.42	4.55	3.37	4.66	3.47	4.78	3.37
	43	3.54	3.12	3.82	3.12	4.14	3.34	4.30	3.34	4.35	3.29	4.44	3.40	4.54	3.30

Heat Mode

Air flow	Ambient air temp. DB	Ambient air temp. WB	Indoor air temp. 16 ℃CDB	18 ℃CDB	20 ℃CDB	22 ℃CDB	24 ℃CDB
Uhi	-19.8	-20	3.10	3.10	3.10	3.10	3.10
	-17.8	-18	3.30	3.30	3.30	3.30	3.30
	-15.7	-16	3.50	3.50	3.50	3.50	3.50
	-13.7	-14	3.70	3.70	3.70	3.70	3.70
	-11.7	-12	3.90	3.90	3.90	3.90	3.90
	-9.6	-10	4.10	4.10	4.10	4.10	4.10
	-7.5	-8	4.35	4.35	4.35	4.35	4.35
12	-5.5	-6	4.60	4.60	4.60	4.60	4.60
(m³/min)	-3.4	-4	4.76	4.75	4.75	4.70	4.65
	-1.3	-2	4.92	4.91	4.90	4.80	4.71
	0.8	0	5.19	5.12	5.04	4.86	4.68
	3.9	3	5.63	5.43	5.23	4.94	4.64
	7.0	6	6.15	5.75	5.35	4.98	4.60
	10.1	9	6.11	5.72	5.33	4.95	4.56
	13.2	12	6.07	5.68	5.30	4.91	4.52
	16.9	15.5	6.03	5.64	5.25	4.86	4.47

Air flow	Ambient air temp. (℃DB)	Indoor air temperature 21 ℃DB 14 ℃WB TC	21 ℃DB 14 ℃WB SHC	23 ℃DB 16 ℃WB TC	23 ℃DB 16 ℃WB SHC	26 ℃DB 18 ℃WB TC	26 ℃DB 18 ℃WB SHC	27 ℃DB 19 ℃WB TC	27 ℃DB 19 ℃WB SHC	28 ℃DB 20 ℃WB TC	28 ℃DB 20 ℃WB SHC	31 ℃DB 22 ℃WB TC	31 ℃DB 22 ℃WB SHC	33 ℃DB 24 ℃WB TC	33 ℃DB 24 ℃WB SHC
Hi	10			3.69	2.94	4.41	3.33	4.77	3.40	5.07	3.44	5.68	3.73	5.90	3.63
	12			3.69	2.94	4.41	3.33	4.77	3.40	5.07	3.44	5.66	3.72	5.88	3.62
	14			3.69	2.94	4.41	3.33	4.77	3.40	5.06	3.44	5.64	3.71	5.85	3.61
	16			3.69	2.94	4.41	3.33	4.77	3.40	5.05	3.43	5.62	3.70	5.83	3.60
	18			3.69	2.94	4.41	3.33	4.77	3.40	5.05	3.43	5.60	3.69	5.80	3.59
	20			3.69	2.94	4.41	3.33	4.77	3.40	5.04	3.43	5.58	3.69	5.78	3.59
	22			3.68	2.94	4.41	3.33	4.77	3.40	5.02	3.42	5.51	3.66	5.70	3.55
11	24			3.68	2.94	4.41	3.33	4.77	3.40	4.99	3.41	5.44	3.63	5.62	3.53
(m³/min)	26			3.68	2.94	4.39	3.32	4.73	3.38	4.93	3.39	5.35	3.60	5.53	3.50
	28	3.33	2.90	3.67	2.93	4.37	3.31	4.68	3.36	4.88	3.37	5.27	3.57	5.44	3.46
	30	3.33	2.90	3.66	2.93	4.33	3.29	4.64	3.35	4.82	3.34	5.19	3.54	5.36	3.44
	32	3.33	2.90	3.65	2.92	4.30	3.28	4.59	3.33	4.76	3.32	5.11	3.50	5.28	3.41
	34	3.33	2.90	3.64	2.92	4.28	3.27	4.53	3.30	4.69	3.29	5.00	3.46	5.17	3.37
	35	3.33	2.90	3.64	2.92	4.28	3.27	4.50	3.29	4.65	3.28	4.95	3.45	5.12	3.35
	36	3.33	2.90	3.63	2.92	4.24	3.26	4.48	3.28	4.60	3.26	4.86	3.41	5.02	3.32
	38	3.33	2.90	3.62	2.91	4.18	3.23	4.43	3.26	4.52	3.23	4.68	3.35	4.82	3.25
	39	3.33	2.90	3.62	2.91	4.15	3.21	4.41	3.26	4.47	3.21	4.59	3.31	4.72	3.22
	41	3.33	2.90	3.61	2.91	4.02	3.16	4.23	3.18	4.28	3.13	4.39	3.24	4.50	3.13
	43	3.33	2.90	3.59	2.90	3.90	3.11	4.05	3.11	4.09	3.05	4.18	3.15	4.28	3.06

Air flow	Ambient air temp. DB	Ambient air temp. WB	Indoor air temp. 16 ℃CDB	18 ℃CDB	20 ℃CDB	22 ℃CDB	24 ℃CDB
Hi	-19.8	-20	2.90	2.90	2.90	2.90	2.90
	-17.8	-18	3.09	3.09	3.09	3.09	3.09
	-15.7	-16	3.27	3.27	3.27	3.27	3.27
	-13.7	-14	3.46	3.46	3.46	3.46	3.46
	-11.7	-12	3.65	3.65	3.65	3.65	3.65
	-9.6	-10	3.83	3.83	3.83	3.83	3.83
	-7.5	-8	4.07	4.07	4.07	4.07	4.07
11	-5.5	-6	4.30	4.30	4.30	4.30	4.30
(m³/min)	-3.4	-4	4.45	4.44	4.44	4.39	4.35
	-1.3	-2	4.60	4.59	4.58	4.49	4.40
	0.8	0	4.85	4.78	4.71	4.54	4.38
	3.9	3	5.26	5.08	4.89	4.61	4.34
	7.0	6	5.75	5.38	5.00	4.65	4.30
	10.1	9	5.71	5.35	4.98	4.62	4.26
	13.2	12	5.68	5.31	4.95	4.59	4.23
	16.9	15.5	5.63	5.27	4.91	4.54	4.18

Air flow	Ambient air temp. (℃DB)	Indoor air temperature 21 ℃DB 14 ℃WB TC	21 ℃DB 14 ℃WB SHC	23 ℃DB 16 ℃WB TC	23 ℃DB 16 ℃WB SHC	26 ℃DB 18 ℃WB TC	26 ℃DB 18 ℃WB SHC	27 ℃DB 19 ℃WB TC	27 ℃DB 19 ℃WB SHC	28 ℃DB 20 ℃WB TC	28 ℃DB 20 ℃WB SHC	31 ℃DB 22 ℃WB TC	31 ℃DB 22 ℃WB SHC	33 ℃DB 24 ℃WB TC	33 ℃DB 24 ℃WB SHC
Me	10			3.18	2.50	3.80	2.83	4.11	2.90	4.38	2.95	4.90	3.17	5.09	3.09
	12			3.18	2.50	3.80	2.83	4.11	2.90	4.37	2.94	4.88	3.17	5.07	3.08
	14			3.18	2.50	3.80	2.83	4.11	2.90	4.36	2.94	4.87	3.16	5.05	3.06
	16			3.18	2.50	3.80	2.83	4.11	2.90	4.36	2.94	4.85	3.16	5.02	3.05
	18			3.18	2.50	3.80	2.83	4.11	2.90	4.35	2.93	4.83	3.15	5.00	3.05
	20			3.18	2.50	3.80	2.83	4.11	2.90	4.35	2.93	4.81	3.14	4.98	3.04
	22			3.18	2.50	3.80	2.83	4.11	2.90	4.33	2.92	4.75	3.10	4.91	3.02
9	24			3.17	2.50	3.80	2.83	4.11	2.90	4.31	2.91	4.69	3.08	4.84	2.99
(m³/min)	26			3.17	2.50	3.78	2.82	4.07	2.88	4.26	2.89	4.62	3.06	4.77	2.97
	28	2.87	2.46	3.17	2.50	3.76	2.81	4.04	2.87	4.20	2.87	4.54	3.03	4.69	2.94
	30	2.87	2.46	3.16	2.49	3.73	2.80	4.00	2.85	4.16	2.85	4.47	3.00	4.62	2.92
	32	2.87	2.46	3.15	2.49	3.71	2.79	3.96	2.83	4.11	2.83	4.40	2.97	4.55	2.89
	34	2.87	2.46	3.14	2.49	3.69	2.78	3.91	2.81	4.04	2.80	4.31	2.94	4.46	2.86
	35	2.87	2.46	3.14	2.49	3.69	2.78	3.88	2.79	4.01	2.79	4.26	2.92	4.41	2.85
	36	2.87	2.46	3.13	2.48	3.66	2.77	3.86	2.79	3.97	2.77	4.19	2.90	4.33	2.82
	38	2.87	2.46	3.12	2.48	3.60	2.75	3.82	2.78	3.89	2.74	4.04	2.84	4.16	2.76
	39	2.87	2.46	3.12	2.48	3.57	2.73	3.80	2.77	3.85	2.73	3.96	2.81	4.07	2.73
	41	2.87	2.46	3.11	2.47	3.47	2.69	3.65	2.71	3.69	2.66	3.78	2.75	3.88	2.67
	43	2.87	2.46	3.10	2.46	3.36	2.64	3.49	2.64	3.53	2.60	3.61	2.69	3.69	2.61

Air flow	Ambient air temp. DB	Ambient air temp. WB	Indoor air temp. 16 ℃CDB	18 ℃CDB	20 ℃CDB	22 ℃CDB	24 ℃CDB
Me	-19.8	-20	2.47	2.47	2.47	2.47	2.47
	-17.8	-18	2.63	2.63	2.63	2.63	2.63
	-15.7	-16	2.79	2.79	2.79	2.79	2.79
	-13.7	-14	2.95	2.95	2.95	2.95	2.95
	-11.7	-12	3.11	3.11	3.11	3.11	3.11
	-9.6	-10	3.27	3.27	3.27	3.27	3.27
	-7.5	-8	3.46	3.46	3.46	3.46	3.46
9	-5.5	-6	3.66	3.66	3.66	3.66	3.66
(m³/min)	-3.4	-4	3.79	3.79	3.78	3.74	3.71
	-1.3	-2	3.92	3.91	3.90	3.82	3.75
	0.8	0	4.13	4.07	4.02	3.87	3.73
	3.9	3	4.48	4.32	4.16	3.93	3.70
	7.0	6	4.90	4.58	4.26	3.96	3.66
	10.1	9	4.87	4.56	4.24	3.94	3.63
	13.2	12	4.84	4.53	4.22	3.91	3.60
	16.9	15.5	4.80	4.49	4.18	3.87	3.56

Air flow	Ambient air temp. (℃DB)	Indoor air temperature 21 ℃DB 14 ℃WB TC	21 ℃DB 14 ℃WB SHC	23 ℃DB 16 ℃WB TC	23 ℃DB 16 ℃WB SHC	26 ℃DB 18 ℃WB TC	26 ℃DB 18 ℃WB SHC	27 ℃DB 19 ℃WB TC	27 ℃DB 19 ℃WB SHC	28 ℃DB 20 ℃WB TC	28 ℃DB 20 ℃WB SHC	31 ℃DB 22 ℃WB TC	31 ℃DB 22 ℃WB SHC	33 ℃DB 24 ℃WB TC	33 ℃DB 24 ℃WB SHC
Lo	10			2.61	2.03	3.12	2.29	3.37	2.35	3.59	2.39	4.02	2.57	4.17	2.50
	12			2.61	2.03	3.12	2.29	3.37	2.35	3.58	2.38	4.00	2.56	4.15	2.49
	14			2.61	2.03	3.12	2.29	3.37	2.35	3.58	2.38	3.99	2.56	4.14	2.49
	16			2.61	2.03	3.12	2.29	3.37	2.35	3.57	2.38	3.97	2.55	4.12	2.48
	18			2.61	2.03	3.12	2.29	3.37	2.35	3.57	2.38	3.96	2.55	4.10	2.47
	20			2.61	2.03	3.12	2.29	3.37	2.35	3.56	2.37	3.94	2.54	4.08	2.47
	22			2.60	2.02	3.11	2.29	3.37	2.35	3.55	2.37	3.89	2.52	4.03	2.45
7	24			2.60	2.02	3.11	2.29	3.37	2.35	3.53	2.36	3.84	2.50	3.97	2.43
(m³/min)	26			2.60	2.02	3.10	2.29	3.34	2.33	3.49	2.34	3.78	2.48	3.91	2.41
	28	2.35	1.99	2.59	2.02	3.08	2.28	3.31	2.32	3.45	2.32	3.72	2.45	3.85	2.38
	30	2.35	1.99	2.59	2.02	3.06	2.27	3.28	2.31	3.41	2.31	3.67	2.43	3.79	2.36
	32	2.35	1.99	2.58	2.01	3.04	2.26	3.24	2.29	3.37	2.29	3.61	2.41	3.73	2.34
	34	2.35	1.99	2.57	2.01	3.03	2.25	3.20	2.28	3.31	2.27	3.53	2.38	3.66	2.32
	35	2.35	1.99	2.57	2.01	3.02	2.25	3.18	2.26	3.29	2.26	3.50	2.37	3.62	2.30
	36	2.35	1.99	2.57	2.01	3.00	2.24	3.16	2.26	3.25	2.24	3.43	2.34	3.55	2.28
	38	2.35	1.99	2.56	2.00	2.95	2.22	3.13	2.25	3.19	2.22	3.31	2.30	3.41	2.23
	39	2.35	1.99	2.56	2.00	2.93	2.21	3.12	2.24	3.16	2.21	3.24	2.27	3.34	2.21
	41	2.35	1.99	2.55	2.00	2.84	2.17	2.99	2.18	3.03	2.15	3.10	2.21	3.18	2.15
	43	2.35	1.99	2.54	1.99	2.75	2.13	2.86	2.13	2.89	2.10	2.96	2.16	3.02	2.10

Air flow	Ambient air temp. DB	Ambient air temp. WB	Indoor air temp. 16 ℃CDB	18 ℃CDB	20 ℃CDB	22 ℃CDB	24 ℃CDB
Lo	-19.8	-20	2.01	2.01	2.01	2.01	2.01
	-17.8	-18	2.14	2.14	2.14	2.14	2.14
	-15.7	-16	2.27	2.27	2.27	2.27	2.27
	-13.7	-14	2.39	2.39	2.39	2.39	2.39
	-11.7	-12	2.52	2.52	2.52	2.52	2.52
	-9.6	-10	2.65	2.65	2.65	2.65	2.65
	-7.5	-8	2.81	2.81	2.81	2.81	2.81
7	-5.5	-6	2.98	2.98	2.98	2.98	2.98
(m³/min)	-3.4	-4	3.08	3.08	3.07	3.04	3.01
	-1.3	-2	3.18	3.17	3.17	3.11	3.04
	0.8	0	3.36	3.31	3.26	3.14	3.03
	3.9	3	3.64	3.51	3.38	3.19	3.00
	7.0	6	3.98	3.72	3.46	3.22	2.98
	10.1	9	3.95	3.70	3.45	3.20	2.95
	13.2	12	3.93	3.68	3.43	3.17	2.92
	16.9	15.5	3.90	3.65	3.40	3.14	2.89

Note(1) This data shows average statuses out of those possible to occur in the system control.
(Depending on controls, there may be ranges where the operation is not conducted continuously.)
(2) Symbols are as follows
TC :Total cooling capacity(kW)
SHC :Sensible heat capacity(kW)

Cool mode	Uhi	Hi	Me	Lo
Air flow	12.00	11	9	7
TC	4.78	4.50	3.88	3.18
SHF	0.74	0.73	0.72	0.71

Heat mode	Uhi	Hi	Me	Lo
Air flow	12	11	9	7
Heating capacity	5.35	5.00	4.26	3.46

Model **FDE56KXE6** Cool Mode

Air flow	Ambient air temp. (℃DB)	Indoor air temperature 21 ℃DB 14 ℃WB TC	21 ℃DB 14 ℃WB SHC	23 ℃DB 16 ℃WB TC	23 ℃DB 16 ℃WB SHC	26 ℃DB 18 ℃WB TC	26 ℃DB 18 ℃WB SHC	27 ℃DB 19 ℃WB TC	27 ℃DB 19 ℃WB SHC	28 ℃DB 20 ℃WB TC	28 ℃DB 20 ℃WB SHC	31 ℃DB 22 ℃WB TC	31 ℃DB 22 ℃WB SHC	33 ℃DB 24 ℃WB TC	33 ℃DB 24 ℃WB SHC
	10			4.93	3.67	5.90	4.16	6.38	4.28	6.79	4.35	7.60	4.69	7.90	4.54
	12			4.93	3.67	5.90	4.16	6.38	4.28	6.78	4.35	7.58	4.68	7.86	4.53
	14			4.93	3.67	5.90	4.16	6.38	4.28	6.77	4.34	7.55	4.67	7.83	4.52
	16			4.93	3.67	5.90	4.16	6.38	4.28	6.76	4.34	7.52	4.65	7.79	4.50
	18			4.93	3.67	5.90	4.16	6.38	4.28	6.75	4.34	7.49	4.63	7.76	4.49
Uhi	20			4.93	3.67	5.90	4.16	6.38	4.28	6.74	4.33	7.47	4.62	7.73	4.48
	22			4.93	3.67	5.90	4.16	6.38	4.28	6.71	4.32	7.37	4.58	7.62	4.44
12	24			4.92	3.67	5.89	4.16	6.38	4.28	6.68	4.30	7.28	4.54	7.52	4.40
(m^3/min)	26			4.92	3.67	5.87	4.15	6.32	4.25	6.60	4.27	7.16	4.50	7.40	4.36
	28	4.45	3.60	4.91	3.66	5.84	4.14	6.26	4.23	6.52	4.23	7.05	4.45	7.28	4.32
	30	4.45	3.60	4.90	3.66	5.79	4.12	6.20	4.20	6.45	4.20	6.94	4.41	7.18	4.28
	32	4.45	3.60	4.89	3.65	5.75	4.10	6.14	4.17	6.37	4.17	6.83	4.36	7.07	4.24
	34	4.45	3.60	4.87	3.64	5.73	4.09	6.06	4.14	6.27	4.13	6.69	4.31	6.92	4.19
	35	4.45	3.60	4.86	3.64	5.72	4.08	6.02	4.15	6.22	4.10	6.62	4.28	6.85	4.16
	36	4.45	3.60	4.86	3.64	5.68	4.07	5.99	4.10	6.16	4.08	6.50	4.24	6.71	4.11
	38	4.45	3.60	4.85	3.64	5.59	4.02	5.93	4.08	6.04	4.02	6.26	4.14	6.45	4.02
	39	4.45	3.60	4.84	3.63	5.55	4.00	5.90	4.06	5.98	4.00	6.14	4.09	6.32	3.97
	41	4.45	3.60	4.82	3.62	5.38	3.92	5.66	3.95	5.73	3.89	5.87	3.99	6.02	3.86
	43	4.45	3.60	4.81	3.62	5.21	3.85	5.42	3.85	5.48	3.78	5.60	3.89	5.72	3.76

Heat Mode

Air flow	Ambient air temp. DB	Ambient air temp. WB	Indoor air temp. 16 ℃DB	18 ℃DB	20 ℃DB	22 ℃DB	24 ℃DB
	-19.8	-20	3.94	3.94	3.94	3.94	3.94
	-17.8	-18	4.19	4.19	4.19	4.19	4.19
	-15.7	-16	4.45	4.45	4.45	4.45	4.45
	-13.7	-14	4.70	4.70	4.70	4.70	4.70
	-11.7	-12	4.95	4.95	4.95	4.95	4.95
Uhi	-9.6	-10	5.21	5.21	5.21	5.21	5.21
	-7.5	-8	5.52	5.52	5.52	5.52	5.52
12	-5.5	-6	5.84	5.84	5.84	5.84	5.84
(m^3/min)	-3.4	-4	6.04	6.03	6.03	5.97	5.91
	-1.3	-2	6.25	6.23	6.21	6.09	5.98
	0.8	0	6.59	6.49	6.40	6.17	5.94
	3.9	3	7.15	6.89	6.64	6.26	5.89
	7.0	6	7.81	7.30	6.79	6.31	5.84
	10.1	9	7.76	7.26	6.76	6.28	5.79
	13.2	12	7.71	7.21	6.72	6.23	5.74
	16.9	15.5	7.65	7.15	6.66	6.17	5.68

Air flow	Ambient air temp. (℃DB)	Indoor air temperature 21 ℃DB 14 ℃WB TC	21 ℃DB 14 ℃WB SHC	23 ℃DB 16 ℃WB TC	23 ℃DB 16 ℃WB SHC	26 ℃DB 18 ℃WB TC	26 ℃DB 18 ℃WB SHC	27 ℃DB 19 ℃WB TC	27 ℃DB 19 ℃WB SHC	28 ℃DB 20 ℃WB TC	28 ℃DB 20 ℃WB SHC	31 ℃DB 22 ℃WB TC	31 ℃DB 22 ℃WB SHC	33 ℃DB 24 ℃WB TC	33 ℃DB 24 ℃WB SHC
	10			4.59	3.40	5.49	3.86	5.94	3.97	6.32	4.03	7.07	4.34	7.35	4.22
	12			4.59	3.40	5.49	3.86	5.94	3.97	6.31	4.03	7.05	4.34	7.31	4.20
	14			4.59	3.40	5.49	3.86	5.94	3.97	6.30	4.02	7.02	4.32	7.28	4.18
	16			4.59	3.40	5.49	3.86	5.94	3.97	6.29	4.02	7.00	4.31	7.25	4.17
	18			4.59	3.40	5.49	3.86	5.94	3.97	6.28	4.01	6.97	4.30	7.22	4.16
Hi	20			4.59	3.40	5.49	3.86	5.94	3.97	6.27	4.01	6.95	4.29	7.19	4.15
	22			4.58	3.40	5.49	3.86	5.94	3.97	6.24	4.00	6.86	4.24	7.09	4.11
11	24			4.58	3.40	5.48	3.85	5.94	3.97	6.21	3.98	6.77	4.21	6.99	4.07
(m^3/min)	26			4.57	3.39	5.46	3.85	5.88	3.94	6.14	3.95	6.66	4.16	6.88	4.03
	28	4.14	3.33	4.57	3.39	5.43	3.83	5.82	3.91	6.07	3.92	6.56	4.12	6.78	3.99
	30	4.14	3.33	4.56	3.39	5.39	3.81	5.77	3.89	6.00	3.89	6.46	4.08	6.67	3.96
	32	4.14	3.33	4.55	3.38	5.35	3.79	5.71	3.86	5.93	3.86	6.36	4.04	6.57	3.92
	34	4.14	3.33	4.53	3.37	5.33	3.78	5.64	3.83	5.83	3.82	6.22	3.99	6.44	3.87
	35	4.14	3.33	4.52	3.37	5.32	3.78	5.60	3.81	5.79	3.80	6.16	3.96	6.37	3.85
	36	4.14	3.33	4.52	3.37	5.28	3.76	5.57	3.80	5.73	3.77	6.05	3.92	6.25	3.80
	38	4.14	3.33	4.51	3.36	5.20	3.72	5.52	3.77	5.62	3.72	5.82	3.83	6.00	3.71
	39	4.14	3.33	4.50	3.36	5.16	3.71	5.49	3.76	5.56	3.70	5.71	3.78	5.87	3.67
	41	4.14	3.33	4.49	3.35	5.00	3.63	5.26	3.65	5.33	3.59	5.46	3.69	5.60	3.57
	43	4.14	3.33	4.47	3.34	4.85	3.56	5.04	3.56	5.10	3.50	5.21	3.59	5.32	3.47

Air flow	Ambient air temp. DB	Ambient air temp. WB	Indoor air temp. 16 ℃DB	18 ℃DB	20 ℃DB	22 ℃DB	24 ℃DB
	-19.8	-20	3.65	3.65	3.65	3.65	3.65
	-17.8	-18	3.89	3.89	3.89	3.89	3.89
	-15.7	-16	4.12	4.12	4.12	4.12	4.12
	-13.7	-14	4.36	4.36	4.36	4.36	4.36
	-11.7	-12	4.59	4.59	4.59	4.59	4.59
Hi	-9.6	-10	4.83	4.83	4.83	4.83	4.83
	-7.5	-8	5.12	5.12	5.12	5.12	5.12
11	-5.5	-6	5.42	5.42	5.42	5.42	5.42
(m^3/min)	-3.4	-4	5.61	5.60	5.59	5.54	5.48
	-1.3	-2	5.80	5.78	5.76	5.65	5.54
	0.8	0	6.11	6.02	5.94	5.73	5.51
	3.9	3	6.63	6.39	6.16	5.81	5.47
	7.0	6	7.25	6.77	6.30	5.86	5.42
	10.1	9	7.20	6.74	6.28	5.82	5.37
	13.2	12	7.15	6.69	6.24	5.78	5.32
	16.9	15.5	7.10	6.64	6.18	5.73	5.27

Air flow	Ambient air temp. (℃DB)	Indoor air temperature 21 ℃DB 14 ℃WB TC	21 ℃DB 14 ℃WB SHC	23 ℃DB 16 ℃WB TC	23 ℃DB 16 ℃WB SHC	26 ℃DB 18 ℃WB TC	26 ℃DB 18 ℃WB SHC	27 ℃DB 19 ℃WB TC	27 ℃DB 19 ℃WB SHC	28 ℃DB 20 ℃WB TC	28 ℃DB 20 ℃WB SHC	31 ℃DB 22 ℃WB TC	31 ℃DB 22 ℃WB SHC	33 ℃DB 24 ℃WB TC	33 ℃DB 24 ℃WB SHC
	10			3.86	2.85	4.62	3.24	4.99	3.33	5.31	3.38	5.95	3.65	6.18	3.54
	12			3.86	2.85	4.62	3.24	4.99	3.33	5.30	3.38	5.93	3.64	6.15	3.53
	14			3.86	2.85	4.62	3.24	4.99	3.33	5.30	3.38	5.91	3.63	6.12	3.52
	16			3.86	2.85	4.62	3.24	4.99	3.33	5.29	3.37	5.89	3.62	6.10	3.51
	18			3.86	2.85	4.62	3.24	4.99	3.33	5.28	3.37	5.86	3.61	6.07	3.50
Me	20			3.86	2.85	4.62	3.24	4.99	3.33	5.28	3.37	5.84	3.60	6.04	3.49
	22			3.86	2.85	4.61	3.23	4.99	3.33	5.25	3.35	5.77	3.57	5.96	3.46
9	24			3.85	2.85	4.61	3.23	4.99	3.33	5.23	3.34	5.69	3.54	5.88	3.42
(m^3/min)	26			3.85	2.85	4.59	3.22	4.95	3.31	5.17	3.32	5.60	3.49	5.79	3.39
	28	3.49	2.80	3.84	2.84	4.57	3.22	4.90	3.28	5.10	3.29	5.51	3.46	5.70	3.35
	30	3.49	2.80	3.83	2.84	4.53	3.20	4.85	3.26	5.04	3.26	5.43	3.42	5.61	3.32
	32	3.49	2.80	3.82	2.83	4.50	3.18	4.80	3.24	4.99	3.24	5.35	3.39	5.53	3.29
	34	3.49	2.80	3.81	2.83	4.48	3.17	4.74	3.21	4.91	3.20	5.23	3.34	5.41	3.24
	35	3.49	2.80	3.81	2.83	4.47	3.17	4.71	3.20	4.87	3.19	5.18	3.32	5.36	3.23
	36	3.49	2.80	3.80	2.82	4.44	3.16	4.69	3.19	4.82	3.17	5.08	3.28	5.25	3.19
	38	3.49	2.80	3.79	2.82	4.37	3.12	4.64	3.17	4.73	3.13	4.90	3.21	5.05	3.11
	39	3.49	2.80	3.79	2.82	4.34	3.11	4.62	3.16	4.68	3.11	4.81	3.18	4.94	3.08
	41	3.49	2.80	3.77	2.81	4.21	3.05	4.43	3.08	4.48	3.02	4.59	3.09	4.71	2.99
	43	3.49	2.80	3.76	2.80	4.08	2.99	4.24	2.99	4.29	2.94	4.38	3.01	4.48	2.91

Air flow	Ambient air temp. DB	Ambient air temp. WB	Indoor air temp. 16 ℃DB	18 ℃DB	20 ℃DB	22 ℃DB	24 ℃DB
	-19.8	-20	3.06	3.06	3.06	3.06	3.06
	-17.8	-18	3.26	3.26	3.26	3.26	3.26
	-15.7	-16	3.46	3.46	3.46	3.46	3.46
	-13.7	-14	3.65	3.65	3.65	3.65	3.65
	-11.7	-12	3.85	3.85	3.85	3.85	3.85
Me	-9.6	-10	4.05	4.05	4.05	4.05	4.05
	-7.5	-8	4.29	4.29	4.29	4.29	4.29
9	-5.5	-6	4.54	4.54	4.54	4.54	4.54
(m^3/min)	-3.4	-4	4.70	4.69	4.69	4.64	4.59
	-1.3	-2	4.86	4.84	4.83	4.74	4.65
	0.8	0	5.12	5.05	4.98	4.80	4.62
	3.9	3	5.56	5.36	5.16	4.87	4.58
	7.0	6	6.07	5.68	5.28	4.91	4.54
	10.1	9	6.03	5.65	5.26	4.88	4.50
	13.2	12	5.99	5.61	5.23	4.84	4.46
	16.9	15.5	5.95	5.56	5.18	4.80	4.42

Air flow	Ambient air temp. (℃DB)	Indoor air temperature 21 ℃DB 14 ℃WB TC	21 ℃DB 14 ℃WB SHC	23 ℃DB 16 ℃WB TC	23 ℃DB 16 ℃WB SHC	26 ℃DB 18 ℃WB TC	26 ℃DB 18 ℃WB SHC	27 ℃DB 19 ℃WB TC	27 ℃DB 19 ℃WB SHC	28 ℃DB 20 ℃WB TC	28 ℃DB 20 ℃WB SHC	31 ℃DB 22 ℃WB TC	31 ℃DB 22 ℃WB SHC	33 ℃DB 24 ℃WB TC	33 ℃DB 24 ℃WB SHC
	10			3.09	2.27	3.69	2.57	4.00	2.65	4.25	2.69	4.76	2.90	4.94	2.81
	12			3.09	2.27	3.69	2.57	4.00	2.65	4.25	2.69	4.75	2.89	4.92	2.80
	14			3.09	2.27	3.69	2.57	4.00	2.65	4.24	2.69	4.73	2.88	4.90	2.80
	16			3.09	2.27	3.69	2.57	4.00	2.65	4.23	2.68	4.71	2.88	4.88	2.79
	18			3.09	2.27	3.69	2.57	4.00	2.65	4.23	2.68	4.69	2.87	4.86	2.78
Lo	20			3.09	2.27	3.69	2.57	4.00	2.65	4.22	2.68	4.68	2.86	4.84	2.77
	22			3.09	2.27	3.69	2.57	4.00	2.65	4.20	2.67	4.62	2.84	4.77	2.74
7	24			3.08	2.26	3.69	2.57	4.00	2.65	4.18	2.66	4.56	2.81	4.71	2.72
(m^3/min)	26			3.08	2.26	3.67	2.56	3.96	2.63	4.13	2.64	4.49	2.78	4.63	2.69
	28	2.79	2.22	3.08	2.26	3.66	2.56	3.92	2.61	4.09	2.62	4.41	2.75	4.56	2.66
	30	2.79	2.22	3.07	2.26	3.63	2.54	3.88	2.59	4.04	2.60	4.35	2.72	4.49	2.64
	32	2.79	2.22	3.06	2.25	3.60	2.53	3.85	2.58	3.99	2.57	4.28	2.69	4.43	2.61
	34	2.79	2.22	3.05	2.25	3.59	2.52	3.80	2.56	3.93	2.55	4.19	2.66	4.33	2.58
	35	2.79	2.22	3.05	2.25	3.58	2.52	3.77	2.53	3.89	2.53	4.14	2.64	4.29	2.56
	36	2.79	2.22	3.04	2.24	3.55	2.50	3.75	2.53	3.86	2.52	4.07	2.61	4.20	2.53
	38	2.79	2.22	3.03	2.24	3.50	2.48	3.71	2.51	3.78	2.48	3.92	2.55	4.04	2.47
	39	2.79	2.22	3.03	2.24	3.47	2.47	3.69	2.51	3.75	2.47	3.85	2.52	3.96	2.44
	41	2.79	2.22	3.02	2.23	3.37	2.42	3.54	2.44	3.59	2.40	3.68	2.45	3.77	2.37
	43	2.79	2.22	3.01	2.23	3.27	2.38	3.39	2.37	3.43	2.33	3.50	2.38	3.58	2.30

Air flow	Ambient air temp. DB	Ambient air temp. WB	Indoor air temp. 16 ℃DB	18 ℃DB	20 ℃DB	22 ℃DB	24 ℃DB
	-19.8	-20	2.43	2.43	2.43	2.43	2.43
	-17.8	-18	2.59	2.59	2.59	2.59	2.59
	-15.7	-16	2.74	2.74	2.74	2.74	2.74
	-13.7	-14	2.90	2.90	2.90	2.90	2.90
	-11.7	-12	3.06	3.06	3.06	3.06	3.06
Lo	-9.6	-10	3.21	3.21	3.21	3.21	3.21
	-7.5	-8	3.41	3.41	3.41	3.41	3.41
7	-5.5	-6	3.60	3.60	3.60	3.60	3.60
(m^3/min)	-3.4	-4	3.73	3.72	3.72	3.68	3.65
	-1.3	-2	3.85	3.84	3.83	3.76	3.69
	0.8	0	4.06	4.01	3.95	3.81	3.67
	3.9	3	4.41	4.25	4.10	3.87	3.63
	7.0	6	4.82	4.50	4.19	3.90	3.60
	10.1	9	4.79	4.48	4.17	3.87	3.57
	13.2	12	4.76	4.45	4.15	3.84	3.54
	16.9	15.5	4.72	4.42	4.11	3.81	3.50

Note(1) This data shows average statuses out of those possible to occur in the system control.
(Depending on controls, there may be ranges where the operation is not conducted continuously.)

(2) Symbols are as follows
TC :Total cooling capacity(kW)
SHC :Sensible heat capacity(kW)

Cool mode	Uhi	Hi	Me	Lo
Air flow	12.00	11	9	7
TC	6.02	5.60	4.71	3.77
SHF	0.69	0.68	0.68	0.67

Heat mode	Uhi	Hi	Me	Lo
Air flow	12	11	9	7
Heating capacity	6.79	6.30	5.28	4.19

Model **FDE71KXE6**

Cool Mode

Air flow	Ambient air temp. (℃DB)	Indoor air temperature 21 ℃DB 14 ℃WB TC	21 ℃DB 14 ℃WB SHC	23 ℃DB 16 ℃WB TC	23 ℃DB 16 ℃WB SHC	26 ℃DB 18 ℃WB TC	26 ℃DB 18 ℃WB SHC	27 ℃DB 19 ℃WB TC	27 ℃DB 19 ℃WB SHC	28 ℃DB 20 ℃WB TC	28 ℃DB 20 ℃WB SHC	31 ℃DB 22 ℃WB TC	31 ℃DB 22 ℃WB SHC	33 ℃DB 24 ℃WB TC	33 ℃DB 24 ℃WB SHC
Uhi	10			6.30	5.29	7.54	5.99	8.15	6.11	8.67	6.18	9.71	6.68	10.09	6.51
	12			6.30	5.29	7.54	5.99	8.15	6.11	8.66	6.18	9.68	6.67	10.04	6.50
	14			6.30	5.29	7.54	5.99	8.15	6.11	8.65	6.17	9.64	6.65	10.00	6.48
	16			6.30	5.29	7.54	5.99	8.15	6.11	8.64	6.17	9.61	6.64	9.96	6.47
	18			6.30	5.29	7.54	5.99	8.15	6.11	8.63	6.17	9.57	6.62	9.91	6.45
	20			6.30	5.29	7.54	5.99	8.15	6.11	8.61	6.16	9.54	6.61	9.87	6.44
	22			6.29	5.29	7.53	5.98	8.15	6.11	8.57	6.14	9.42	6.57	9.73	6.39
20 (m^3/min)	24			6.29	5.29	7.53	5.98	8.15	6.11	8.53	6.13	9.30	6.52	9.60	6.35
	26			6.28	5.28	7.49	5.97	8.07	6.08	8.43	6.09	9.15	6.47	9.45	6.30
	28	5.69	5.22	6.28	5.28	7.46	5.95	8.00	6.05	8.33	6.05	9.00	6.41	9.30	6.25
	30	5.69	5.22	6.26	5.27	7.40	5.93	7.92	6.02	8.24	6.01	8.87	6.37	9.17	6.20
	32	5.69	5.22	6.24	5.26	7.34	5.90	7.84	5.98	8.14	5.97	8.73	6.32	9.03	6.16
	34	5.69	5.22	6.22	5.25	7.32	5.90	7.74	5.94	8.01	5.92	8.55	6.25	8.84	6.09
	35	5.69	5.22	6.21	5.25	7.31	5.89	7.69	5.92	7.94	5.90	8.45	6.22	8.75	6.06
	36	5.69	5.22	6.21	5.25	7.25	5.87	7.65	5.91	7.87	5.87	8.30	6.16	8.58	6.01
	38	5.69	5.22	6.19	5.24	7.14	5.82	7.57	5.87	7.72	5.81	8.00	6.06	8.24	5.90
	39	5.69	5.22	6.18	5.24	7.09	5.80	7.54	5.86	7.64	5.78	7.85	6.00	8.07	5.84
	41	5.69	5.22	6.16	5.23	6.87	5.71	7.23	5.74	7.32	5.66	7.50	5.88	7.69	5.72
	43	5.69	5.22	6.14	5.22	6.66	5.62	6.92	5.62	7.00	5.54	7.15	5.76	7.31	5.60

Heat Mode

Air flow	Ambient air temp. DB	Ambient air temp. WB	Indoor air temp. 16 ℃CDB	18 ℃CDB	20 ℃CDB	22 ℃CDB	24 ℃CDB
Uhi	-19.8	-20	5.06	5.06	5.06	5.06	5.06
	-17.8	-18	5.39	5.39	5.39	5.39	5.39
	-15.7	-16	5.72	5.72	5.72	5.72	5.72
	-13.7	-14	6.04	6.04	6.04	6.04	6.04
	-11.7	-12	6.37	6.37	6.37	6.37	6.37
	-9.6	-10	6.69	6.69	6.69	6.69	6.69
	-7.5	-8	7.10	7.10	7.10	7.10	7.10
20 (m^3/min)	-5.5	-6	7.51	7.51	7.51	7.51	7.51
	-3.4	-4	7.77	7.76	7.75	7.67	7.60
	-1.3	-2	8.03	8.01	7.99	7.84	7.68
	0.8	0	8.47	8.35	8.23	7.93	7.64
	3.9	3	9.19	8.86	8.53	8.05	7.57
	7.0	6	10.04	9.38	8.73	8.12	7.51
	10.1	9	9.97	9.34	8.70	8.07	7.44
	13.2	12	9.91	9.28	8.64	8.01	7.38
	16.9	15.5	9.83	9.20	8.57	7.93	7.30

Air flow	Ambient air temp. (℃DB)	Indoor air temperature 21 ℃DB 14 ℃WB TC	21 ℃DB 14 ℃WB SHC	23 ℃DB 16 ℃WB TC	23 ℃DB 16 ℃WB SHC	26 ℃DB 18 ℃WB TC	26 ℃DB 18 ℃WB SHC	27 ℃DB 19 ℃WB TC	27 ℃DB 19 ℃WB SHC	28 ℃DB 20 ℃WB TC	28 ℃DB 20 ℃WB SHC	31 ℃DB 22 ℃WB TC	31 ℃DB 22 ℃WB SHC	33 ℃DB 24 ℃WB TC	33 ℃DB 24 ℃WB SHC
Hi	10			5.82	4.83	6.96	5.46	7.53	5.58	8.01	5.65	8.97	6.10	9.31	5.94
	12			5.82	4.83	6.96	5.46	7.53	5.58	8.00	5.64	8.94	6.09	9.27	5.93
	14			5.82	4.83	6.96	5.46	7.53	5.58	7.99	5.64	8.90	6.07	9.23	5.91
	16			5.82	4.83	6.96	5.46	7.53	5.58	7.97	5.63	8.87	6.06	9.19	5.90
	18			5.82	4.83	6.96	5.46	7.53	5.58	7.96	5.63	8.84	6.05	9.15	5.89
	20			5.82	4.83	6.96	5.46	7.53	5.58	7.95	5.62	8.81	6.04	9.11	5.87
	22			5.81	4.83	6.95	5.46	7.53	5.58	7.92	5.61	8.70	5.99	8.99	5.83
18 (m^3/min)	24			5.80	4.83	6.95	5.46	7.53	5.58	7.88	5.60	8.58	5.95	8.86	5.79
	26			5.80	4.83	6.92	5.44	7.46	5.55	7.79	5.56	8.45	5.90	8.73	5.74
	28	5.25	4.76	5.79	4.82	6.89	5.43	7.38	5.52	7.69	5.52	8.31	5.85	8.59	5.70
	30	5.25	4.76	5.78	4.82	6.83	5.41	7.31	5.49	7.60	5.48	8.19	5.81	8.46	5.65
	32	5.25	4.76	5.77	4.81	6.78	5.39	7.24	5.46	7.51	5.45	8.06	5.76	8.33	5.61
	34	5.25	4.76	5.75	4.80	6.76	5.38	7.15	5.42	7.39	5.40	7.89	5.70	8.16	5.55
	35	5.25	4.76	5.74	4.79	6.75	5.37	7.10	5.40	7.33	5.38	7.80	5.66	8.08	5.53
	36	5.25	4.76	5.73	4.79	6.69	5.35	7.06	5.39	7.26	5.35	7.66	5.61	7.92	5.47
	38	5.25	4.76	5.72	4.78	6.59	5.31	6.99	5.36	7.12	5.30	7.38	5.51	7.61	5.37
	39	5.25	4.76	5.71	4.78	6.54	5.29	6.96	5.35	7.05	5.27	7.24	5.46	7.45	5.32
	41	5.25	4.76	5.69	4.77	6.35	5.21	6.67	5.23	6.76	5.16	6.92	5.35	7.10	5.21
	43	5.25	4.76	5.67	4.76	6.15	5.13	6.39	5.12	6.46	5.04	6.60	5.24	6.75	5.10

Air flow	Ambient air temp. DB	Ambient air temp. WB	Indoor air temp. 16 ℃CDB	18 ℃CDB	20 ℃CDB	22 ℃CDB	24 ℃CDB
Hi	-19.8	-20	4.64	4.64	4.64	4.64	4.64
	-17.8	-18	4.94	4.94	4.94	4.94	4.94
	-15.7	-16	5.24	5.24	5.24	5.24	5.24
	-13.7	-14	5.54	5.54	5.54	5.54	5.54
	-11.7	-12	5.83	5.83	5.83	5.83	5.83
	-9.6	-10	6.13	6.13	6.13	6.13	6.13
	-7.5	-8	6.51	6.51	6.51	6.51	6.51
18 (m^3/min)	-5.5	-6	6.88	6.88	6.88	6.88	6.88
	-3.4	-4	7.12	7.11	7.10	7.03	6.96
	-1.3	-2	7.36	7.34	7.32	7.18	7.04
	0.8	0	7.76	7.65	7.54	7.27	7.00
	3.9	3	8.42	8.12	7.82	7.38	6.94
	7.0	6	9.20	8.60	8.00	7.44	6.88
	10.1	9	9.14	8.56	7.97	7.40	6.82
	13.2	12	9.08	8.50	7.92	7.34	6.76
	16.9	15.5	9.01	8.43	7.85	7.27	6.69

Air flow	Ambient air temp. (℃DB)	Indoor air temperature 21 ℃DB 14 ℃WB TC	21 ℃DB 14 ℃WB SHC	23 ℃DB 16 ℃WB TC	23 ℃DB 16 ℃WB SHC	26 ℃DB 18 ℃WB TC	26 ℃DB 18 ℃WB SHC	27 ℃DB 19 ℃WB TC	27 ℃DB 19 ℃WB SHC	28 ℃DB 20 ℃WB TC	28 ℃DB 20 ℃WB SHC	31 ℃DB 22 ℃WB TC	31 ℃DB 22 ℃WB SHC	33 ℃DB 24 ℃WB TC	33 ℃DB 24 ℃WB SHC
Me	10			4.76	3.84	5.69	4.34	6.16	4.45	6.55	4.51	7.34	4.86	7.62	4.74
	12			4.76	3.84	5.69	4.34	6.16	4.45	6.54	4.50	7.31	4.85	7.59	4.73
	14			4.76	3.84	5.69	4.34	6.16	4.45	6.53	4.50	7.29	4.84	7.56	4.71
	16			4.76	3.84	5.69	4.34	6.16	4.45	6.53	4.50	7.26	4.83	7.52	4.70
	18			4.76	3.84	5.69	4.34	6.16	4.45	6.52	4.49	7.23	4.82	7.49	4.69
	20			4.76	3.84	5.69	4.34	6.16	4.45	6.51	4.49	7.21	4.81	7.46	4.68
	22			4.76	3.84	5.69	4.34	6.16	4.45	6.48	4.48	7.12	4.78	7.35	4.64
14 (m^3/min)	24			4.75	3.84	5.69	4.34	6.16	4.45	6.45	4.47	7.02	4.74	7.25	4.61
	26			4.74	3.83	5.66	4.33	6.10	4.43	6.37	4.43	6.91	4.70	7.14	4.57
	28	4.30	3.79	4.74	3.83	5.64	4.32	6.04	4.39	6.30	4.41	6.80	4.66	7.03	4.53
	30	4.30	3.79	4.73	3.83	5.59	4.30	5.98	4.37	6.22	4.37	6.70	4.62	6.92	4.50
	32	4.30	3.79	4.72	3.82	5.55	4.29	5.93	4.35	6.15	4.34	6.60	4.58	6.82	4.46
	34	4.30	3.79	4.70	3.81	5.53	4.28	5.85	4.32	6.05	4.30	6.46	4.53	6.68	4.41
	35	4.30	3.79	4.69	3.81	5.52	4.27	5.81	4.30	6.00	4.28	6.39	4.50	6.61	4.38
	36	4.30	3.79	4.69	3.81	5.48	4.26	5.78	4.29	5.94	4.26	6.27	4.46	6.48	4.34
	38	4.30	3.79	4.68	3.80	5.39	4.22	5.72	4.26	5.83	4.21	6.04	4.37	6.22	4.25
	39	4.30	3.79	4.67	3.80	5.35	4.20	5.69	4.25	5.77	4.19	5.93	4.33	6.10	4.21
	41	4.30	3.79	4.65	3.79	5.19	4.13	5.46	4.16	5.53	4.10	5.66	4.24	5.81	4.12
	43	4.30	3.79	4.64	3.79	5.03	4.07	5.23	4.06	5.29	4.00	5.40	4.15	5.52	4.03

Air flow	Ambient air temp. DB	Ambient air temp. WB	Indoor air temp. 16 ℃CDB	18 ℃CDB	20 ℃CDB	22 ℃CDB	24 ℃CDB
Me	-19.8	-20	3.74	3.74	3.74	3.74	3.74
	-17.8	-18	3.98	3.98	3.98	3.98	3.98
	-15.7	-16	4.22	4.22	4.22	4.22	4.22
	-13.7	-14	4.46	4.46	4.46	4.46	4.46
	-11.7	-12	4.70	4.70	4.70	4.70	4.70
	-9.6	-10	4.95	4.95	4.95	4.95	4.95
	-7.5	-8	5.25	5.25	5.25	5.25	5.25
14 (m^3/min)	-5.5	-6	5.55	5.55	5.55	5.55	5.55
	-3.4	-4	5.74	5.73	5.72	5.67	5.61
	-1.3	-2	5.93	5.92	5.90	5.79	5.68
	0.8	0	6.26	6.17	6.08	5.86	5.64
	3.9	3	6.79	6.55	6.30	5.95	5.60
	7.0	6	7.42	6.93	6.45	6.00	5.55
	10.1	9	7.37	6.90	6.43	5.96	5.50
	13.2	12	7.32	6.85	6.39	5.92	5.45
	16.9	15.5	7.26	6.80	6.33	5.86	5.39

Air flow	Ambient air temp. (℃DB)	Indoor air temperature 21 ℃DB 14 ℃WB TC	21 ℃DB 14 ℃WB SHC	23 ℃DB 16 ℃WB TC	23 ℃DB 16 ℃WB SHC	26 ℃DB 18 ℃WB TC	26 ℃DB 18 ℃WB SHC	27 ℃DB 19 ℃WB TC	27 ℃DB 19 ℃WB SHC	28 ℃DB 20 ℃WB TC	28 ℃DB 20 ℃WB SHC	31 ℃DB 22 ℃WB TC	31 ℃DB 22 ℃WB SHC	33 ℃DB 24 ℃WB TC	33 ℃DB 24 ℃WB SHC
Lo	10			4.19	3.35	5.01	3.78	5.42	3.87	5.76	3.92	6.46	4.24	6.70	4.12
	12			4.19	3.35	5.01	3.78	5.42	3.87	5.76	3.92	6.43	4.23	6.67	4.11
	14			4.19	3.35	5.01	3.78	5.42	3.87	5.75	3.92	6.41	4.22	6.64	4.10
	16			4.19	3.35	5.01	3.78	5.42	3.87	5.74	3.91	6.39	4.21	6.62	4.09
	18			4.19	3.35	5.01	3.78	5.42	3.87	5.73	3.91	6.36	4.20	6.59	4.08
	20			4.19	3.35	5.01	3.78	5.42	3.87	5.72	3.91	6.34	4.19	6.56	4.07
	22			4.18	3.34	5.01	3.78	5.42	3.87	5.70	3.90	6.26	4.16	6.47	4.04
12 (m^3/min)	24			4.18	3.34	5.00	3.78	5.42	3.87	5.67	3.89	6.18	4.12	6.38	4.01
	26			4.17	3.34	4.98	3.77	5.37	3.85	5.60	3.86	6.08	4.09	6.28	3.97
	28	3.78	3.29	4.17	3.34	4.96	3.76	5.31	3.83	5.54	3.83	5.98	4.05	6.18	3.94
	30	3.78	3.29	4.16	3.33	4.92	3.74	5.26	3.81	5.47	3.80	5.89	4.02	6.09	3.91
	32	3.78	3.29	4.15	3.33	4.88	3.73	5.21	3.78	5.41	3.78	5.80	3.98	6.00	3.88
	34	3.78	3.29	4.14	3.32	4.86	3.72	5.14	3.75	5.32	3.74	5.68	3.94	5.87	3.83
	35	3.78	3.29	4.13	3.32	4.85	3.71	5.11	3.73	5.28	3.72	5.62	3.91	5.81	3.81
	36	3.78	3.29	4.12	3.31	4.82	3.70	5.08	3.73	5.23	3.70	5.52	3.88	5.70	3.77
	38	3.78	3.29	4.11	3.31	4.74	3.67	5.03	3.71	5.13	3.66	5.31	3.80	5.47	3.69
	39	3.78	3.29	4.11	3.31	4.71	3.65	5.01	3.70	5.08	3.64	5.21	3.76	5.36	3.66
	41	3.78	3.29	4.09	3.30	4.57	3.59	4.80	3.61	4.86	3.56	4.98	3.68	5.11	3.57
	43	3.78	3.29	4.08	3.29	4.43	3.54	4.60	3.53	4.65	3.48	4.75	3.60	4.86	3.49

Air flow	Ambient air temp. DB	Ambient air temp. WB	Indoor air temp. 16 ℃CDB	18 ℃CDB	20 ℃CDB	22 ℃CDB	24 ℃CDB
Lo	-19.8	-20	3.26	3.26	3.26	3.26	3.26
	-17.8	-18	3.47	3.47	3.47	3.47	3.47
	-15.7	-16	3.68	3.68	3.68	3.68	3.68
	-13.7	-14	3.89	3.89	3.89	3.89	3.89
	-11.7	-12	4.10	4.10	4.10	4.10	4.10
	-9.6	-10	4.31	4.31	4.31	4.31	4.31
	-7.5	-8	4.57	4.57	4.57	4.57	4.57
12 (m^3/min)	-5.5	-6	4.83	4.83	4.83	4.83	4.83
	-3.4	-4	5.00	4.99	4.99	4.94	4.89
	-1.3	-2	5.17	5.16	5.14	5.04	4.95
	0.8	0	5.45	5.37	5.30	5.11	4.92
	3.9	3	5.92	5.70	5.49	5.18	4.88
	7.0	6	6.46	6.04	5.62	5.23	4.83
	10.1	9	6.42	6.01	5.60	5.19	4.79
	13.2	12	6.38	5.97	5.56	5.16	4.75
	16.9	15.5	6.33	5.92	5.51	5.11	4.70

Note(1) This data shows average statuses out of those possible to occur in the system control.
(Depending on controls, there may be ranges where the operation is not conducted continuously.)

(2) Symbols are as follows
TC :Total cooling capacity(kW)
SHC :Sensible heat capacity(kW)

Cool mode	Uhi	Hi	Me	Lo
Air flow	20.00	18	14	12
TC	7.69	7.10	5.81	5.11
SHF	0.77	0.76	0.74	0.73

Heat mode	Uhi	Hi	Me	Lo
Air flow	20	18	14	12
Heating capacity	8.73	8.00	6.45	5.62

Model **FDE112KXE6** Cool Mode

Air flow	Ambient air temp. (℃CDB)	Indoor air temperature 21 ℃CDB 14 ℃CWB TC	SHC	23 ℃CDB 16 ℃CWB TC	SHC	26 ℃CDB 18 ℃CWB TC	SHC	27 ℃CDB 19 ℃CWB TC	SHC	28 ℃CDB 20 ℃CWB TC	SHC	31 ℃CDB 22 ℃CWB TC	SHC	33 ℃CDB 24 ℃CWB TC	SHC
	10			9.96	8.05	11.91	9.09	12.88	9.30	13.70	9.42	15.35	10.18	15.94	9.92
	12			9.96	8.05	11.91	9.09	12.88	9.30	13.68	9.41	15.29	10.16	15.87	9.89
	14			9.96	8.05	11.91	9.09	12.88	9.30	13.67	9.41	15.24	10.14	15.80	9.87
	16			9.96	8.05	11.91	9.09	12.88	9.30	13.65	9.40	15.18	10.11	15.73	9.84
	18			9.96	8.05	11.91	9.09	12.88	9.30	13.63	9.39	15.13	10.10	15.66	9.82
Uhi	20			9.96	8.05	11.91	9.09	12.88	9.30	13.61	9.38	15.07	10.07	15.59	9.79
	22			9.95	8.04	11.90	9.09	12.88	9.30	13.55	9.36	14.88	10.00	15.38	9.72
29	24			9.93	8.03	11.90	9.09	12.88	9.30	13.48	9.33	14.69	9.93	15.17	9.65
(m^3/min)	26			9.92	8.03	11.84	9.06	12.76	9.25	13.32	9.26	14.46	9.82	14.93	9.55
	28	8.99	7.92	9.91	8.02	11.79	9.04	12.64	9.20	13.17	9.21	14.23	9.74	14.70	9.47
	30	8.99	7.92	9.89	8.01	11.69	9.00	12.51	9.14	13.01	9.14	14.01	9.66	14.48	9.39
	32	8.99	7.92	9.87	8.01	11.60	8.96	12.39	9.09	12.86	9.08	13.79	9.57	14.26	9.32
	34	8.99	7.92	9.83	7.99	11.56	8.94	12.23	9.03	12.65	9.00	13.50	9.47	13.97	9.22
	35	8.99	7.92	9.82	7.98	11.54	8.94	12.15	8.99	12.55	8.96	13.36	9.41	13.82	9.17
	36	8.99	7.92	9.81	7.98	11.46	8.90	12.09	8.97	12.43	8.91	13.12	9.33	13.55	9.08
	38	8.99	7.92	9.78	7.97	11.28	8.83	11.97	8.92	12.19	8.81	12.64	9.15	13.01	8.90
	39	8.99	7.92	9.77	7.96	11.19	8.79	11.91	8.90	12.07	8.77	12.40	9.06	12.75	8.81
	41	8.99	7.92	9.73	7.94	10.86	8.65	11.42	8.70	11.56	8.57	11.85	8.87	12.15	8.62
	43	8.99	7.92	9.70	7.93	10.52	8.51	10.94	8.50	11.06	8.38	11.30	8.67	11.55	8.42

Heat Mode

Air flow	Ambient air temp. DB	WB	Indoor air temp. 16 ℃CDB	18 ℃CDB	20 ℃CDB	22 ℃CDB	24 ℃CDB
	-19.8	-20	7.96	7.96	7.96	7.96	7.96
	-17.8	-18	8.48	8.48	8.48	8.48	8.48
	-15.7	-16	8.99	8.99	8.99	8.99	8.99
	-13.7	-14	9.50	9.50	9.50	9.50	9.50
	-11.7	-12	10.01	10.01	10.01	10.01	10.01
Uhi	-9.6	-10	10.53	10.53	10.53	10.53	10.53
	-7.5	-8	11.17	11.17	11.17	11.17	11.17
29	-5.5	-6	11.81	11.81	11.81	11.81	11.81
(m^3/min)	-3.4	-4	12.22	12.20	12.19	12.07	11.95
	-1.3	-2	12.63	12.60	12.56	12.32	12.08
	0.8	0	13.32	13.13	12.94	12.48	12.01
	3.9	3	14.45	13.94	13.42	12.67	11.91
	7.0	6	15.79	14.76	13.73	12.77	11.81
	10.1	9	15.69	14.68	13.68	12.69	11.70
	13.2	12	15.58	14.59	13.59	12.60	11.60
	16.9	15.5	15.46	14.47	13.47	12.48	11.48

Air flow	Ambient air temp. (℃CDB)	Indoor air temperature 21 ℃CDB 14 ℃CWB TC	SHC	23 ℃CDB 16 ℃CWB TC	SHC	26 ℃CDB 18 ℃CWB TC	SHC	27 ℃CDB 19 ℃CWB TC	SHC	28 ℃CDB 20 ℃CWB TC	SHC	31 ℃CDB 22 ℃CWB TC	SHC	33 ℃CDB 24 ℃CWB TC	SHC
	10			9.18	7.32	10.97	8.28	11.87	8.47	12.63	8.59	14.15	9.28	14.69	9.03
	12			9.18	7.32	10.97	8.28	11.87	8.47	12.61	8.58	14.10	9.26	14.63	9.01
	14			9.18	7.32	10.97	8.28	11.87	8.47	12.60	8.58	14.05	9.24	14.56	8.99
	16			9.18	7.32	10.97	8.28	11.87	8.47	12.58	8.57	14.00	9.22	14.50	8.97
	18			9.18	7.32	10.97	8.28	11.87	8.47	12.56	8.56	13.94	9.20	14.44	8.94
Hi	20			9.18	7.32	10.97	8.28	11.87	8.47	12.55	8.56	13.89	9.18	14.37	8.92
	22			9.17	7.32	10.97	8.28	11.87	8.47	12.49	8.53	13.72	9.11	14.18	8.85
26	24			9.15	7.31	10.97	8.28	11.87	8.47	12.43	8.51	13.54	9.04	13.98	8.78
(m^3/min)	26			9.15	7.31	10.92	8.26	11.76	8.43	12.28	8.44	13.33	8.96	13.77	8.71
	28	8.29	7.21	9.14	7.31	10.86	8.23	11.65	8.38	12.14	8.39	13.11	8.88	13.55	8.63
	30	8.29	7.21	9.12	7.30	10.78	8.20	11.54	8.33	12.00	8.33	12.91	8.79	13.35	8.55
	32	8.29	7.21	9.09	7.29	10.70	8.16	11.42	8.28	11.85	8.27	12.71	8.71	13.15	8.48
	34	8.29	7.21	9.06	7.27	10.66	8.15	11.27	8.22	11.66	8.19	12.45	8.62	12.87	8.38
	35	8.29	7.21	9.05	7.27	10.64	8.14	11.20	8.18	11.57	8.16	12.31	8.56	12.74	8.34
	36	8.29	7.21	9.04	7.26	10.56	8.10	11.14	8.17	11.46	8.11	12.09	8.48	12.49	8.25
	38	8.29	7.21	9.02	7.25	10.40	8.03	11.03	8.12	11.24	8.02	11.65	8.32	12.00	8.09
	39	8.29	7.21	9.00	7.25	10.32	8.00	10.98	8.10	11.13	7.98	11.43	8.24	11.75	8.01
	41	8.29	7.21	8.97	7.23	10.01	7.87	10.53	7.92	10.66	7.80	10.92	8.06	11.20	7.82
	43	8.29	7.21	8.94	7.22	9.70	7.74	10.08	7.73	10.19	7.61	10.41	7.87	10.65	7.65

Air flow	Ambient air temp. DB	WB	Indoor air temp. 16 ℃CDB	18 ℃CDB	20 ℃CDB	22 ℃CDB	24 ℃CDB
	-19.8	-20	7.25	7.25	7.25	7.25	7.25
	-17.8	-18	7.72	7.72	7.72	7.72	7.72
	-15.7	-16	8.18	8.18	8.18	8.18	8.18
	-13.7	-14	8.65	8.65	8.65	8.65	8.65
	-11.7	-12	9.12	9.12	9.12	9.12	9.12
Hi	-9.6	-10	9.58	9.58	9.58	9.58	9.58
	-7.5	-8	10.17	10.17	10.17	10.17	10.17
26	-5.5	-6	10.75	10.75	10.75	10.75	10.75
(m^3/min)	-3.4	-4	11.13	11.11	11.09	10.98	10.88
	-1.3	-2	11.50	11.47	11.44	11.22	11.00
	0.8	0	12.13	11.95	11.78	11.36	10.94
	3.9	3	13.16	12.69	12.22	11.53	10.84
	7.0	6	14.38	13.44	12.50	11.63	10.75
	10.1	9	14.28	13.37	12.45	11.55	10.66
	13.2	12	14.19	13.28	12.38	11.47	10.56
	16.9	15.5	14.08	13.17	12.27	11.36	10.45

Air flow	Ambient air temp. (℃CDB)	Indoor air temperature 21 ℃CDB 14 ℃CWB TC	SHC	23 ℃CDB 16 ℃CWB TC	SHC	26 ℃CDB 18 ℃CWB TC	SHC	27 ℃CDB 19 ℃CWB TC	SHC	28 ℃CDB 20 ℃CWB TC	SHC	31 ℃CDB 22 ℃CWB TC	SHC	33 ℃CDB 24 ℃CWB TC	SHC
	10			8.34	6.55	9.98	7.42	10.79	7.59	11.48	7.70	12.86	8.31	13.35	8.09
	12			8.34	6.55	9.98	7.42	10.79	7.59	11.47	7.69	12.81	8.29	13.30	8.07
	14			8.34	6.55	9.98	7.42	10.79	7.59	11.45	7.69	12.77	8.27	13.24	8.05
	16			8.34	6.55	9.98	7.42	10.79	7.59	11.43	7.68	12.72	8.25	13.18	8.03
	18			8.34	6.55	9.98	7.42	10.79	7.59	11.42	7.67	12.67	8.23	13.12	8.00
Me	20			8.34	6.55	9.98	7.42	10.79	7.59	11.40	7.67	12.63	8.22	13.06	7.98
	22			8.33	6.55	9.97	7.42	10.79	7.59	11.35	7.65	12.47	8.16	12.89	7.92
23	24			8.32	6.54	9.97	7.42	10.79	7.59	11.30	7.62	12.31	8.10	12.71	7.85
(m^3/min)	26			8.31	6.54	9.92	7.39	10.69	7.55	11.16	7.57	12.11	8.01	12.51	7.78
	28	7.53	6.44	8.31	6.54	9.87	7.37	10.59	7.51	11.03	7.51	11.92	7.93	12.32	7.71
	30	7.53	6.44	8.29	6.53	9.80	7.33	10.49	7.47	10.90	7.46	11.74	7.87	12.13	7.64
	32	7.53	6.44	8.27	6.52	9.72	7.30	10.38	7.42	10.77	7.41	11.56	7.80	11.95	7.58
	34	7.53	6.44	8.24	6.51	9.69	7.28	10.25	7.37	10.60	7.34	11.31	7.70	11.70	7.50
	35	7.53	6.44	8.23	6.50	9.67	7.28	10.18	7.33	10.52	7.31	11.19	7.66	11.58	7.46
	36	7.53	6.44	8.22	6.50	9.60	7.24	10.13	7.32	10.42	7.27	10.99	7.58	11.35	7.38
	38	7.53	6.44	8.19	6.48	9.45	7.18	10.03	7.27	10.21	7.18	10.59	7.44	10.90	7.21
	39	7.53	6.44	8.18	6.48	9.38	7.15	9.98	7.24	10.11	7.13	10.39	7.35	10.68	7.14
	41	7.53	6.44	8.16	6.47	9.10	7.03	9.57	7.07	9.69	6.97	9.93	7.19	10.18	6.98
	43	7.53	6.44	8.13	6.46	8.82	6.91	9.16	6.91	9.26	6.80	9.46	7.02	9.68	6.81

Air flow	Ambient air temp. DB	WB	Indoor air temp. 16 ℃CDB	18 ℃CDB	20 ℃CDB	22 ℃CDB	24 ℃CDB
	-19.8	-20	6.51	6.51	6.51	6.51	6.51
	-17.8	-18	6.93	6.93	6.93	6.93	6.93
	-15.7	-16	7.35	7.35	7.35	7.35	7.35
	-13.7	-14	7.77	7.77	7.77	7.77	7.77
	-11.7	-12	8.19	8.19	8.19	8.19	8.19
Me	-9.6	-10	8.61	8.61	8.61	8.61	8.61
	-7.5	-8	9.13	9.13	9.13	9.13	9.13
23	-5.5	-6	9.66	9.66	9.66	9.66	9.66
(m^3/min)	-3.4	-4	9.99	9.98	9.97	9.87	9.77
	-1.3	-2	10.33	10.30	10.28	10.08	9.88
	0.8	0	10.89	10.74	10.58	10.21	9.83
	3.9	3	11.82	11.40	10.98	10.36	9.74
	7.0	6	12.91	12.07	11.23	10.44	9.66
	10.1	9	12.83	12.01	11.19	10.38	9.57
	13.2	12	12.75	11.93	11.12	10.30	9.49
	16.9	15.5	12.65	11.83	11.02	10.21	9.39

Air flow	Ambient air temp. (℃CDB)	Indoor air temperature 21 ℃CDB 14 ℃CWB TC	SHC	23 ℃CDB 16 ℃CWB TC	SHC	26 ℃CDB 18 ℃CWB TC	SHC	27 ℃CDB 19 ℃CWB TC	SHC	28 ℃CDB 20 ℃CWB TC	SHC	31 ℃CDB 22 ℃CWB TC	SHC	33 ℃CDB 24 ℃CWB TC	SHC
	10			7.76	6.07	9.28	6.87	10.04	7.04	10.68	7.15	11.96	7.70	12.42	7.50
	12			7.76	6.07	9.28	6.87	10.04	7.04	10.67	7.14	11.92	7.69	12.37	7.48
	14			7.76	6.07	9.28	6.87	10.04	7.04	10.65	7.13	11.88	7.67	12.31	7.46
	16			7.76	6.07	9.28	6.87	10.04	7.04	10.64	7.13	11.83	7.65	12.26	7.44
	18			7.76	6.07	9.28	6.87	10.04	7.04	10.62	7.12	11.79	7.64	12.21	7.42
Lo	20			7.76	6.07	9.28	6.87	10.04	7.04	10.61	7.12	11.75	7.62	12.15	7.40
	22			7.75	6.07	9.28	6.87	10.04	7.04	10.56	7.10	11.60	7.56	11.99	7.34
21	24			7.74	6.06	9.27	6.87	10.04	7.04	10.51	7.08	11.45	7.50	11.82	7.28
(m^3/min)	26			7.73	6.06	9.23	6.85	9.94	6.99	10.39	7.03	11.27	7.43	11.64	7.22
	28	7.01	5.97	7.73	6.06	9.19	6.83	9.85	6.96	10.26	6.96	11.09	7.36	11.46	7.15
	30	7.01	5.97	7.71	6.05	9.11	6.80	9.75	6.91	10.14	6.91	10.92	7.30	11.29	7.09
	32	7.01	5.97	7.69	6.04	9.04	6.77	9.66	6.87	10.02	6.86	10.75	7.23	11.12	7.03
	34	7.01	5.97	7.66	6.03	9.01	6.75	9.53	6.82	9.86	6.80	10.52	7.13	10.89	6.95
	35	7.01	5.97	7.65	6.02	9.00	6.75	9.47	6.82	9.78	6.76	10.41	7.09	10.77	6.90
	36	7.01	5.97	7.64	6.02	8.93	6.72	9.42	6.77	9.69	6.73	10.22	7.02	10.56	6.83
	38	7.01	5.97	7.62	6.01	8.79	6.66	9.33	6.73	9.50	6.65	9.85	6.88	10.14	6.68
	39	7.01	5.97	7.61	6.00	8.73	6.63	9.28	6.71	9.41	6.61	9.66	6.81	9.93	6.61
	41	7.01	5.97	7.59	6.00	8.46	6.52	8.90	6.56	9.01	6.46	9.23	6.65	9.47	6.46
	43	7.01	5.97	7.56	5.98	8.20	6.41	8.52	6.40	8.62	6.30	8.80	6.50	9.00	6.31

Air flow	Ambient air temp. DB	WB	Indoor air temp. 16 ℃CDB	18 ℃CDB	20 ℃CDB	22 ℃CDB	24 ℃CDB
	-19.8	-20	6.00	6.00	6.00	6.00	6.00
	-17.8	-18	6.39	6.39	6.39	6.39	6.39
	-15.7	-16	6.78	6.78	6.78	6.78	6.78
	-13.7	-14	7.16	7.16	7.16	7.16	7.16
	-11.7	-12	7.55	7.55	7.55	7.55	7.55
Lo	-9.6	-10	7.94	7.94	7.94	7.94	7.94
	-7.5	-8	8.42	8.42	8.42	8.42	8.42
21	-5.5	-6	8.90	8.90	8.90	8.90	8.90
(m^3/min)	-3.4	-4	9.21	9.20	9.19	9.10	9.00
	-1.3	-2	9.52	9.50	9.47	9.29	9.11
	0.8	0	10.04	9.90	9.75	9.41	9.06
	3.9	3	10.89	10.51	10.12	9.55	8.98
	7.0	6	11.90	11.13	10.35	9.63	8.90
	10.1	9	11.82	11.07	10.31	9.57	8.82
	13.2	12	11.75	11.00	10.25	9.50	8.75
	16.9	15.5	11.66	10.91	10.16	9.41	8.66

Note(1) This data shows average statuses out of those possible to occur in the system control.
(Depending on controls, there may be ranges where the operation is not conducted continuously.)

(2) Symbols are as follows
TC :Total cooling capacity(kW)
SHC :Sensible heat capacity(kW)

Cool mode	Uhi	Hi	Me	Lo
Air flow	29.00	26	23	21
TC	12.15	11.20	10.18	9.47
SHF	0.74	0.73	0.72	0.72

Heat mode	Uhi	Hi	Me	Lo
Air flow	29	26	23	21
Heating capacity	13.73	12.50	11.23	10.35

Model **FDE140KXE6** Cool Mode

Air flow	Ambient air temp. (°CDB)	Indoor air temperature 21 °CDB 14 °CWB TC	21 °CDB 14 °CWB SHC	23 °CDB 16 °CWB TC	23 °CDB 16 °CWB SHC	26 °CDB 18 °CWB TC	26 °CDB 18 °CWB SHC	27 °CDB 19 °CWB TC	27 °CDB 19 °CWB SHC	28 °CDB 20 °CWB TC	28 °CDB 20 °CWB SHC	31 °CDB 22 °CWB TC	31 °CDB 22 °CWB SHC	33 °CDB 24 °CWB TC	33 °CDB 24 °CWB SHC
Uhi	10			12.04	9.19	14.39	10.41	15.57	10.69	16.57	10.85	18.56	11.70	19.27	11.38
	12			12.04	9.19	14.39	10.41	15.57	10.69	16.54	10.84	18.49	11.67	19.19	11.35
	14			12.04	9.19	14.39	10.41	15.57	10.69	16.52	10.83	18.42	11.65	19.10	11.32
	16			12.04	9.19	14.39	10.41	15.57	10.69	16.50	10.82	18.36	11.62	19.02	11.27
	18			12.04	9.19	14.39	10.41	15.57	10.69	16.48	10.82	18.29	11.59	18.94	11.24
	20			12.04	9.19	14.39	10.41	15.57	10.69	16.45	10.80	18.22	11.57	18.85	11.21
	22			12.02	9.18	14.39	10.41	15.57	10.69	16.38	10.77	17.99	11.46	18.60	11.12
31	24			12.01	9.18	14.38	10.41	15.57	10.69	16.30	10.74	17.76	11.37	18.34	11.02
(m^3/min)	26			12.00	9.17	14.32	10.38	15.42	10.61	16.11	10.66	17.48	11.26	18.06	10.92
	28	10.87	9.04	11.99	9.17	14.25	10.35	15.28	10.55	15.92	10.58	17.20	11.15	17.77	10.82
	30	10.87	9.04	11.96	9.16	14.14	10.30	15.13	10.49	15.73	10.48	16.94	11.05	17.51	10.73
	32	10.87	9.04	11.93	9.14	14.03	10.25	14.98	10.42	15.55	10.41	16.68	10.95	17.24	10.63
	34	10.87	9.04	11.89	9.12	13.98	10.23	14.79	10.34	15.30	10.30	16.32	10.79	16.89	10.49
	35	10.87	9.04	11.87	9.11	13.96	10.22	14.69	10.28	15.18	10.26	16.15	10.73	16.71	10.43
	36	10.87	9.04	11.85	9.10	13.85	10.17	14.62	10.27	15.03	10.19	15.86	10.62	16.38	10.31
	38	10.87	9.04	11.83	9.10	13.64	10.08	14.47	10.20	14.74	10.07	15.28	10.40	15.74	10.09
	39	10.87	9.04	11.81	9.09	13.53	10.03	14.40	10.17	14.59	10.01	14.99	10.29	15.41	9.98
	41	10.87	9.04	11.77	9.07	13.13	9.85	13.81	9.92	13.98	9.77	14.32	10.04	14.69	9.72
	43	10.87	9.04	11.73	9.05	12.72	9.67	13.22	9.67	13.37	9.51	13.66	9.78	13.97	9.48

Heat Mode

Air flow	Ambient air temp. DB	Ambient air temp. WB	Indoor air temp. 16 °CDB	18 °CDB	20 °CDB	22 °CDB	24 °CDB
Uhi	-19.8	-20	9.81	9.81	9.81	9.81	9.81
	-17.8	-18	10.45	10.45	10.45	10.45	10.45
	-15.7	-16	11.08	11.08	11.08	11.08	11.08
	-13.7	-14	11.71	11.71	11.71	11.71	11.71
	-11.7	-12	12.34	12.34	12.34	12.34	12.34
	-9.6	-10	12.97	12.97	12.97	12.97	12.97
	-7.5	-8	13.76	13.76	13.76	13.76	13.76
31	-5.5	-6	14.55	14.55	14.55	14.55	14.55
(m^3/min)	-3.4	-4	15.06	15.04	15.02	14.87	14.72
	-1.3	-2	15.57	15.52	15.48	15.19	14.89
	0.8	0	16.41	16.18	15.95	15.38	14.81
	3.9	3	17.81	17.17	16.54	15.61	14.68
	7.0	6	19.46	18.19	16.92	15.74	14.55
	10.1	9	19.33	18.09	16.86	15.64	14.42
	13.2	12	19.20	17.98	16.75	15.52	14.30
	16.9	15.5	19.06	17.83	16.60	15.38	14.15

Air flow	Ambient air temp. (°CDB)	Indoor air temperature 21 °CDB 14 °CWB TC	21 °CDB 14 °CWB SHC	23 °CDB 16 °CWB TC	23 °CDB 16 °CWB SHC	26 °CDB 18 °CWB TC	26 °CDB 18 °CWB SHC	27 °CDB 19 °CWB TC	27 °CDB 19 °CWB SHC	28 °CDB 20 °CWB TC	28 °CDB 20 °CWB SHC	31 °CDB 22 °CWB TC	31 °CDB 22 °CWB SHC	33 °CDB 24 °CWB TC	33 °CDB 24 °CWB SHC
Hi	10			11.48	8.74	13.72	9.89	14.84	10.16	15.79	10.31	17.69	11.11	18.36	10.80
	12			11.48	8.74	13.72	9.89	14.84	10.16	15.77	10.30	17.62	11.08	18.28	10.77
	14			11.48	8.74	13.72	9.89	14.84	10.16	15.75	10.30	17.56	11.06	18.20	10.74
	16			11.48	8.74	13.72	9.89	14.84	10.16	15.72	10.28	17.49	11.03	18.13	10.71
	18			11.48	8.74	13.72	9.89	14.84	10.16	15.70	10.27	17.43	11.00	18.05	10.68
	20			11.48	8.74	13.72	9.89	14.84	10.16	15.68	10.26	17.37	10.98	17.97	10.65
	22			11.46	8.73	13.71	9.88	14.84	10.16	15.61	10.24	17.15	10.89	17.72	10.56
29	24			11.44	8.72	13.71	9.88	14.84	10.16	15.54	10.21	16.93	10.80	17.48	10.47
(m^3/min)	26			11.43	8.71	13.64	9.85	14.70	10.10	15.35	10.12	16.66	10.70	17.21	10.37
	28	10.36	8.59	11.42	8.71	13.58	9.83	14.56	10.03	15.17	10.05	16.39	10.59	16.94	10.27
	30	10.36	8.59	11.40	8.70	13.48	9.78	14.42	9.97	14.99	9.97	16.14	10.49	16.69	10.18
	32	10.36	8.59	11.37	8.69	13.37	9.73	14.28	9.91	14.82	9.90	15.89	10.39	16.43	10.09
	34	10.36	8.59	11.33	8.67	13.32	9.71	14.09	9.81	14.58	9.80	15.56	10.26	16.09	9.97
	35	10.36	8.59	11.31	8.66	13.30	9.70	14.00	9.80	14.46	9.75	15.39	10.19	15.92	9.91
	36	10.36	8.59	11.30	8.65	13.20	9.66	13.93	9.75	14.32	9.69	15.11	10.09	15.61	9.80
	38	10.36	8.59	11.27	8.64	13.00	9.57	13.79	9.69	14.05	9.56	14.56	9.86	15.00	9.59
	39	10.36	8.59	11.26	8.63	12.90	9.52	13.72	9.66	13.91	9.51	14.28	9.76	14.69	9.47
	41	10.36	8.59	11.22	8.62	12.51	9.35	13.16	9.42	13.32	9.26	13.65	9.52	14.00	9.23
	43	10.36	8.59	11.18	8.60	12.13	9.19	12.60	9.18	12.74	9.03	13.02	9.29	13.31	9.00

Air flow	Ambient air temp. DB	Ambient air temp. WB	Indoor air temp. 16 °CDB	18 °CDB	20 °CDB	22 °CDB	24 °CDB
Hi	-19.8	-20	9.28	9.28	9.28	9.28	9.28
	-17.8	-18	9.88	9.88	9.88	9.88	9.88
	-15.7	-16	10.47	10.47	10.47	10.47	10.47
	-13.7	-14	11.07	11.07	11.07	11.07	11.07
	-11.7	-12	11.67	11.67	11.67	11.67	11.67
	-9.6	-10	12.27	12.27	12.27	12.27	12.27
	-7.5	-8	13.01	13.01	13.01	13.01	13.01
29	-5.5	-6	13.76	13.76	13.76	13.76	13.76
(m^3/min)	-3.4	-4	14.24	14.22	14.20	14.06	13.92
	-1.3	-2	14.72	14.68	14.64	14.36	14.08
	0.8	0	15.52	15.30	15.08	14.54	14.00
	3.9	3	16.84	16.24	15.64	14.76	13.88
	7.0	6	18.40	17.20	16.00	14.88	13.76
	10.1	9	18.28	17.11	15.94	14.79	13.64
	13.2	12	18.16	17.00	15.84	14.68	13.52
	16.9	15.5	18.02	16.86	15.70	14.54	13.38

Air flow	Ambient air temp. (°CDB)	Indoor air temperature 21 °CDB 14 °CWB TC	21 °CDB 14 °CWB SHC	23 °CDB 16 °CWB TC	23 °CDB 16 °CWB SHC	26 °CDB 18 °CWB TC	26 °CDB 18 °CWB SHC	27 °CDB 19 °CWB TC	27 °CDB 19 °CWB SHC	28 °CDB 20 °CWB TC	28 °CDB 20 °CWB SHC	31 °CDB 22 °CWB TC	31 °CDB 22 °CWB SHC	33 °CDB 24 °CWB TC	33 °CDB 24 °CWB SHC
Me	10			10.57	7.96	12.64	9.02	13.67	9.27	14.55	9.42	16.30	10.16	16.92	9.87
	12			10.57	7.96	12.64	9.02	13.67	9.27	14.53	9.41	16.24	10.12	16.85	9.83
	14			10.57	7.96	12.64	9.02	13.67	9.27	14.51	9.40	16.18	10.10	16.77	9.80
	16			10.57	7.96	12.64	9.02	13.67	9.27	14.49	9.39	16.12	10.07	16.70	9.77
	18			10.57	7.96	12.64	9.02	13.67	9.27	14.47	9.38	16.06	10.04	16.63	9.75
	20			10.57	7.96	12.64	9.02	13.67	9.27	14.45	9.37	16.00	10.02	16.56	9.72
	22			10.56	7.96	12.64	9.02	13.67	9.27	14.38	9.34	15.80	9.94	16.33	9.63
26	24			10.54	7.95	12.63	9.03	13.67	9.27	14.31	9.31	15.60	9.86	16.10	9.55
(m^3/min)	26			10.54	7.95	12.57	8.99	13.55	9.21	14.15	9.24	15.35	9.75	15.86	9.46
	28	9.55	7.83	10.53	7.94	12.51	8.96	13.42	9.16	13.98	9.17	15.10	9.65	15.61	9.37
	30	9.55	7.83	10.50	7.93	12.42	8.92	13.29	9.10	13.82	9.10	14.87	9.56	15.38	9.28
	32	9.55	7.83	10.47	7.91	12.32	8.88	13.16	9.04	13.65	9.03	14.64	9.47	15.14	9.20
	34	9.55	7.83	10.44	7.90	12.28	8.86	12.99	8.97	13.44	8.94	14.33	9.35	14.83	9.08
	35	9.55	7.83	10.42	7.89	12.26	8.85	12.90	8.90	13.33	8.89	14.18	9.29	14.67	9.03
	36	9.55	7.83	10.41	7.89	12.16	8.80	12.84	8.90	13.20	8.84	13.93	9.19	14.39	8.93
	38	9.55	7.83	10.38	7.87	11.98	8.72	12.71	8.83	12.94	8.73	13.42	8.99	13.82	8.73
	39	9.55	7.83	10.37	7.87	11.89	8.68	12.64	8.80	12.82	8.67	13.16	8.90	13.53	8.63
	41	9.55	7.83	10.34	7.86	11.53	8.52	12.13	8.58	12.28	8.44	12.58	8.66	12.90	8.39
	43	9.55	7.83	10.30	7.84	11.17	8.37	11.61	8.36	11.74	8.23	11.99	8.44	12.26	8.18

Air flow	Ambient air temp. DB	Ambient air temp. WB	Indoor air temp. 16 °CDB	18 °CDB	20 °CDB	22 °CDB	24 °CDB
Me	-19.8	-20	8.45	8.45	8.45	8.45	8.45
	-17.8	-18	8.99	8.99	8.99	8.99	8.99
	-15.7	-16	9.54	9.54	9.54	9.54	9.54
	-13.7	-14	10.08	10.08	10.08	10.08	10.08
	-11.7	-12	10.63	10.63	10.63	10.63	10.63
	-9.6	-10	11.17	11.17	11.17	11.17	11.17
	-7.5	-8	11.85	11.85	11.85	11.85	11.85
26	-5.5	-6	12.53	12.53	12.53	12.53	12.53
(m^3/min)	-3.4	-4	12.97	12.95	12.93	12.80	12.68
	-1.3	-2	13.40	13.37	13.33	13.08	12.82
	0.8	0	14.13	13.93	13.73	13.24	12.75
	3.9	3	15.33	14.79	14.24	13.44	12.64
	7.0	6	16.76	15.66	14.57	13.55	12.53
	10.1	9	16.65	15.58	14.52	13.47	12.42
	13.2	12	16.54	15.48	14.42	13.37	12.31
	16.9	15.5	16.41	15.35	14.30	13.24	12.18

Air flow	Ambient air temp. (°CDB)	Indoor air temperature 21 °CDB 14 °CWB TC	21 °CDB 14 °CWB SHC	23 °CDB 16 °CWB TC	23 °CDB 16 °CWB SHC	26 °CDB 18 °CWB TC	26 °CDB 18 °CWB SHC	27 °CDB 19 °CWB TC	27 °CDB 19 °CWB SHC	28 °CDB 20 °CWB TC	28 °CDB 20 °CWB SHC	31 °CDB 22 °CWB TC	31 °CDB 22 °CWB SHC	33 °CDB 24 °CWB TC	33 °CDB 24 °CWB SHC
Lo	10			9.62	7.19	11.49	8.15	12.43	8.37	13.23	8.51	14.82	9.17	15.39	8.91
	12			9.62	7.19	11.49	8.15	12.43	8.37	13.21	8.50	14.76	9.14	15.32	8.88
	14			9.62	7.19	11.49	8.15	12.43	8.37	13.19	8.49	14.71	9.12	15.25	8.85
	16			9.62	7.19	11.49	8.15	12.43	8.37	13.17	8.48	14.66	9.10	15.19	8.83
	18			9.62	7.19	11.49	8.15	12.43	8.37	13.16	8.48	14.60	9.08	15.12	8.80
	20			9.62	7.19	11.49	8.15	12.43	8.37	13.14	8.47	14.55	9.05	15.05	8.77
	22			9.60	7.18	11.49	8.15	12.43	8.37	13.08	8.44	14.37	8.98	14.85	8.70
23	24			9.59	7.18	11.49	8.15	12.43	8.37	13.02	8.42	14.18	8.90	14.64	8.62
(m^3/min)	26			9.58	7.17	11.43	8.12	12.32	8.32	12.86	8.34	13.96	8.81	14.42	8.53
	28	8.68	7.06	9.57	7.17	11.38	8.10	12.20	8.27	12.71	8.28	13.73	8.71	14.19	8.45
	30	8.68	7.06	9.55	7.16	11.29	8.06	12.08	8.21	12.56	8.21	13.53	8.63	13.98	8.37
	32	8.68	7.06	9.52	7.14	11.20	8.02	11.96	8.16	12.42	8.15	13.32	8.55	13.77	8.29
	34	8.68	7.06	9.49	7.13	11.16	8.00	11.81	8.09	12.22	8.07	13.03	8.43	13.48	8.19
	35	8.68	7.06	9.48	7.12	11.14	7.99	11.73	7.98	12.12	8.02	12.89	8.37	13.34	8.13
	36	8.68	7.06	9.47	7.12	11.06	7.95	11.67	8.03	12.00	7.97	12.66	8.28	13.08	8.04
	38	8.68	7.06	9.44	7.11	10.89	7.87	11.55	7.98	11.77	7.87	12.20	8.10	12.56	7.85
	39	8.68	7.06	9.43	7.10	10.81	7.84	11.50	7.95	11.65	7.82	11.97	8.01	12.31	7.76
	41	8.68	7.06	9.40	7.09	10.48	7.69	11.03	7.75	11.16	7.62	11.44	7.81	11.73	7.56
	43	8.68	7.06	9.36	7.07	10.16	7.55	10.56	7.55	10.67	7.42	10.90	7.61	11.15	7.36

Air flow	Ambient air temp. DB	Ambient air temp. WB	Indoor air temp. 16 °CDB	18 °CDB	20 °CDB	22 °CDB	24 °CDB
Lo	-19.8	-20	7.59	7.59	7.59	7.59	7.59
	-17.8	-18	8.08	8.08	8.08	8.08	8.08
	-15.7	-16	8.57	8.57	8.57	8.57	8.57
	-13.7	-14	9.06	9.06	9.06	9.06	9.06
	-11.7	-12	9.55	9.55	9.55	9.55	9.55
	-9.6	-10	10.04	10.04	10.04	10.04	10.04
	-7.5	-8	10.65	10.65	10.65	10.65	10.65
23	-5.5	-6	11.26	11.26	11.26	11.26	11.26
(m^3/min)	-3.4	-4	11.65	11.63	11.62	11.50	11.39
	-1.3	-2	12.04	12.01	11.98	11.75	11.52
	0.8	0	12.70	12.52	12.34	11.90	11.45
	3.9	3	13.78	13.29	12.80	12.08	11.36
	7.0	6	15.05	14.07	13.09	12.17	11.26
	10.1	9	14.96	14.00	13.04	12.10	11.16
	13.2	12	14.86	13.91	12.96	12.01	11.06
	16.9	15.5	14.74	13.79	12.84	11.90	10.95

Note(1) This data shows average statuses out of those possible to occur in the system control.
(Depending on controls, there may be ranges where the operation is not conducted continuously.)
(2) Symbols are as follows
TC :Total cooling capacity(kW)
SHC :Sensible heat capacity(kW)

Cool mode	Uhi	Hi	Me	Lo
Air flow	31.00	29	26	23
TC	14.69	14.00	12.90	11.73
SHF	0.70	0.70	0.69	0.68

Heat mode	Uhi	Hi	Me	Lo
Air flow	31	29	26	23
Heating capacity	16.92	16.00	14.57	13.09

Model **FDK22KXE6** Cool Mode

Air flow	Ambient air temp. (℃DB)	Indoor air temperature 21 ℃CDB 14 ℃CWB TC	SHC	23 ℃CDB 16 ℃CWB TC	SHC	26 ℃CDB 18 ℃CWB TC	SHC	27 ℃CDB 19 ℃CWB TC	SHC	28 ℃CDB 20 ℃CWB TC	SHC	31 ℃CDB 22 ℃CWB TC	SHC	33 ℃CDB 24 ℃CWB TC	SHC
Uhi	10			1.93	1.85	2.30	2.21	2.49	2.26	2.65	2.28	2.97	2.48	3.08	2.43
	12			1.93	1.85	2.30	2.21	2.49	2.26	2.65	2.28	2.96	2.47	3.07	2.42
	14			1.93	1.85	2.30	2.21	2.49	2.26	2.64	2.28	2.95	2.47	3.06	2.42
	16			1.93	1.85	2.30	2.21	2.49	2.26	2.64	2.28	2.94	2.47	3.04	2.41
	18			1.93	1.85	2.30	2.21	2.49	2.26	2.64	2.28	2.93	2.46	3.03	2.41
	20			1.93	1.85	2.30	2.21	2.49	2.26	2.63	2.27	2.91	2.46	3.02	2.41
	22			1.92	1.84	2.30	2.21	2.49	2.26	2.62	2.27	2.88	2.45	2.97	2.39
9	24			1.92	1.84	2.30	2.21	2.49	2.26	2.61	2.27	2.84	2.43	2.93	2.38
(m^3/min)	26			1.92	1.84	2.29	2.20	2.47	2.25	2.58	2.25	2.80	2.42	2.89	2.37
	28	1.74	1.67	1.92	1.84	2.28	2.19	2.44	2.24	2.55	2.24	2.75	2.40	2.84	2.35
	30	1.74	1.67	1.91	1.83	2.26	2.17	2.42	2.23	2.52	2.23	2.71	2.39	2.80	2.34
	32	1.74	1.67	1.91	1.83	2.24	2.15	2.40	2.22	2.49	2.22	2.67	2.38	2.76	2.33
	34	1.74	1.67	1.90	1.82	2.24	2.15	2.37	2.21	2.45	2.20	2.61	2.35	2.70	2.30
	35	1.74	1.67	1.90	1.82	2.23	2.14	2.35	2.21	2.43	2.20	2.58	2.34	2.67	2.30
	36	1.74	1.67	1.90	1.82	2.22	2.13	2.34	2.20	2.40	2.19	2.54	2.33	2.62	2.28
	38	1.74	1.67	1.89	1.81	2.18	2.09	2.31	2.19	2.36	2.17	2.44	2.30	2.52	2.25
	39	1.74	1.67	1.89	1.81	2.17	2.08	2.30	2.19	2.33	2.16	2.40	2.28	2.47	2.24
	41	1.74	1.67	1.88	1.80	2.10	2.02	2.21	2.12	2.24	2.13	2.29	2.20	2.35	2.20
	43	1.74	1.67	1.88	1.80	2.04	1.96	2.12	2.04	2.14	2.05	2.18	2.09	2.23	2.14

Heat Mode

Air flow	Ambient air temp. DB	WB	Indoor air temp. 16 ℃CDB	18 ℃CDB	20 ℃CDB	22 ℃CDB	24 ℃CDB
Uhi	-19.8	-20	1.60	1.60	1.60	1.60	1.60
	-17.8	-18	1.70	1.70	1.70	1.70	1.70
	-15.7	-16	1.81	1.81	1.81	1.81	1.81
	-13.7	-14	1.91	1.91	1.91	1.91	1.91
	-11.7	-12	2.01	2.01	2.01	2.01	2.01
	-9.6	-10	2.12	2.12	2.12	2.12	2.12
	-7.5	-8	2.24	2.24	2.24	2.24	2.24
9	-5.5	-6	2.37	2.37	2.37	2.37	2.37
(m^3/min)	-3.4	-4	2.46	2.45	2.45	2.43	2.40
	-1.3	-2	2.54	2.53	2.53	2.48	2.43
	0.8	0	2.68	2.64	2.60	2.51	2.42
	3.9	3	2.90	2.80	2.70	2.55	2.39
	7.0	6	3.17	2.97	2.76	2.57	2.37
	10.1	9	3.15	2.95	2.75	2.55	2.35
	13.2	12	3.13	2.93	2.73	2.53	2.33
	16.9	15.5	3.11	2.91	2.71	2.51	2.31

Air flow	Ambient air temp. (℃DB)	Indoor air temperature 21 ℃CDB 14 ℃CWB TC	SHC	23 ℃CDB 16 ℃CWB TC	SHC	26 ℃CDB 18 ℃CWB TC	SHC	27 ℃CDB 19 ℃CWB TC	SHC	28 ℃CDB 20 ℃CWB TC	SHC	31 ℃CDB 22 ℃CWB TC	SHC	33 ℃CDB 24 ℃CWB TC	SHC
Hi	10			1.80	1.73	2.16	2.04	2.33	2.06	2.48	2.08	2.78	2.26	2.89	2.21
	12			1.80	1.73	2.16	2.04	2.33	2.06	2.48	2.08	2.77	2.26	2.87	2.21
	14			1.80	1.73	2.16	2.04	2.33	2.06	2.47	2.08	2.76	2.25	2.86	2.20
	16			1.80	1.73	2.16	2.04	2.33	2.06	2.47	2.08	2.75	2.25	2.85	2.20
	18			1.80	1.73	2.16	2.04	2.33	2.06	2.47	2.08	2.74	2.25	2.84	2.20
	20			1.80	1.73	2.16	2.04	2.33	2.06	2.46	2.08	2.73	2.24	2.82	2.19
	22			1.80	1.73	2.15	2.03	2.33	2.06	2.45	2.07	2.69	2.23	2.78	2.18
8	24			1.80	1.73	2.15	2.03	2.33	2.06	2.44	2.07	2.66	2.22	2.75	2.17
(m^3/min)	26			1.80	1.73	2.14	2.03	2.31	2.06	2.41	2.06	2.62	2.21	2.70	2.16
	28	1.63	1.56	1.80	1.73	2.13	2.02	2.29	2.05	2.38	2.05	2.58	2.19	2.66	2.14
	30	1.63	1.56	1.79	1.72	2.12	2.02	2.27	2.04	2.36	2.04	2.54	2.18	2.62	2.13
	32	1.63	1.56	1.79	1.72	2.10	2.01	2.24	2.03	2.33	2.03	2.50	2.17	2.58	2.12
	34	1.63	1.56	1.78	1.71	2.09	2.01	2.21	2.02	2.29	2.01	2.44	2.15	2.53	2.10
	35	1.63	1.56	1.78	1.71	2.09	2.01	2.20	2.00	2.27	2.01	2.42	2.14	2.50	2.09
	36	1.63	1.56	1.78	1.71	2.07	1.99	2.19	2.01	2.25	2.00	2.37	2.12	2.45	2.08
	38	1.63	1.56	1.77	1.70	2.04	1.96	2.17	2.01	2.21	1.99	2.29	2.10	2.36	2.05
	39	1.63	1.56	1.77	1.70	2.03	1.95	2.16	2.00	2.19	1.98	2.24	2.08	2.31	2.04
	41	1.63	1.56	1.76	1.69	1.97	1.89	2.07	1.97	2.09	1.94	2.14	2.05	2.20	2.00
	43	1.63	1.56	1.76	1.69	1.91	1.83	1.98	1.90	2.00	1.91	2.05	1.97	2.09	1.97

Air flow	Ambient air temp. DB	WB	Indoor air temp. 16 ℃CDB	18 ℃CDB	20 ℃CDB	22 ℃CDB	24 ℃CDB
Hi	-19.8	-20	1.45	1.45	1.45	1.45	1.45
	-17.8	-18	1.54	1.54	1.54	1.54	1.54
	-15.7	-16	1.64	1.64	1.64	1.64	1.64
	-13.7	-14	1.73	1.73	1.73	1.73	1.73
	-11.7	-12	1.82	1.82	1.82	1.82	1.82
	-9.6	-10	1.92	1.92	1.92	1.92	1.92
	-7.5	-8	2.03	2.03	2.03	2.03	2.03
8	-5.5	-6	2.15	2.15	2.15	2.15	2.15
(m^3/min)	-3.4	-4	2.23	2.22	2.22	2.20	2.18
	-1.3	-2	2.30	2.29	2.29	2.24	2.20
	0.8	0	2.43	2.39	2.36	2.27	2.19
	3.9	3	2.63	2.54	2.44	2.31	2.17
	7.0	6	2.88	2.69	2.50	2.33	2.15
	10.1	9	2.86	2.67	2.49	2.31	2.13
	13.2	12	2.84	2.66	2.48	2.29	2.11
	16.9	15.5	2.82	2.63	2.45	2.27	2.09

Air flow	Ambient air temp. (℃DB)	Indoor air temperature 21 ℃CDB 14 ℃CWB TC	SHC	23 ℃CDB 16 ℃CWB TC	SHC	26 ℃CDB 18 ℃CWB TC	SHC	27 ℃CDB 19 ℃CWB TC	SHC	28 ℃CDB 20 ℃CWB TC	SHC	31 ℃CDB 22 ℃CWB TC	SHC	33 ℃CDB 24 ℃CWB TC	SHC
Me	10			1.66	1.59	1.99	1.81	2.15	1.84	2.29	1.86	2.56	2.01	2.66	1.97
	12			1.66	1.59	1.99	1.81	2.15	1.84	2.29	1.86	2.56	2.01	2.65	1.96
	14			1.66	1.59	1.99	1.81	2.15	1.84	2.28	1.85	2.55	2.01	2.64	1.96
	16			1.66	1.59	1.99	1.81	2.15	1.84	2.28	1.85	2.54	2.00	2.63	1.96
	18			1.66	1.59	1.99	1.81	2.15	1.84	2.28	1.85	2.53	2.00	2.62	1.96
	20			1.66	1.59	1.99	1.81	2.15	1.84	2.27	1.85	2.52	2.00	2.61	1.95
	22			1.66	1.59	1.99	1.81	2.15	1.84	2.26	1.85	2.49	1.99	2.57	1.94
7	24			1.66	1.59	1.99	1.81	2.15	1.84	2.25	1.84	2.45	1.97	2.53	1.93
(m^3/min)	26			1.66	1.59	1.98	1.81	2.13	1.83	2.23	1.84	2.42	1.96	2.50	1.92
	28	1.50	1.44	1.66	1.59	1.97	1.80	2.11	1.82	2.20	1.82	2.38	1.95	2.46	1.91
	30	1.50	1.44	1.65	1.58	1.95	1.79	2.09	1.82	2.17	1.81	2.34	1.94	2.42	1.89
	32	1.50	1.44	1.65	1.58	1.94	1.79	2.07	1.81	2.15	1.81	2.30	1.92	2.38	1.88
	34	1.50	1.44	1.64	1.57	1.93	1.78	2.04	1.80	2.11	1.79	2.26	1.91	2.33	1.87
	35	1.50	1.44	1.64	1.57	1.93	1.78	2.03	1.79	2.10	1.79	2.23	1.90	2.31	1.86
	36	1.50	1.44	1.64	1.57	1.91	1.78	2.02	1.79	2.08	1.78	2.19	1.89	2.26	1.84
	38	1.50	1.44	1.63	1.56	1.88	1.77	2.00	1.78	2.04	1.77	2.11	1.86	2.17	1.82
	39	1.50	1.44	1.63	1.56	1.87	1.76	1.99	1.78	2.02	1.76	2.07	1.85	2.13	1.80
	41	1.50	1.44	1.63	1.56	1.81	1.74	1.91	1.75	1.93	1.72	1.98	1.81	2.03	1.77
	43	1.50	1.44	1.62	1.56	1.76	1.69	1.83	1.72	1.85	1.70	1.89	1.78	1.93	1.74

Air flow	Ambient air temp. DB	WB	Indoor air temp. 16 ℃CDB	18 ℃CDB	20 ℃CDB	22 ℃CDB	24 ℃CDB
Me	-19.8	-20	1.29	1.29	1.29	1.29	1.29
	-17.8	-18	1.38	1.38	1.38	1.38	1.38
	-15.7	-16	1.46	1.46	1.46	1.46	1.46
	-13.7	-14	1.54	1.54	1.54	1.54	1.54
	-11.7	-12	1.63	1.63	1.63	1.63	1.63
	-9.6	-10	1.71	1.71	1.71	1.71	1.71
	-7.5	-8	1.81	1.81	1.81	1.81	1.81
7	-5.5	-6	1.92	1.92	1.92	1.92	1.92
(m^3/min)	-3.4	-4	1.98	1.98	1.98	1.96	1.94
	-1.3	-2	2.05	2.05	2.04	2.00	1.96
	0.8	0	2.16	2.13	2.10	2.03	1.95
	3.9	3	2.35	2.26	2.18	2.06	1.93
	7.0	6	2.56	2.40	2.23	2.07	1.92
	10.1	9	2.55	2.38	2.22	2.06	1.90
	13.2	12	2.53	2.37	2.21	2.05	1.88
	16.9	15.5	2.51	2.35	2.19	2.03	1.86

Air flow	Ambient air temp. (℃DB)	Indoor air temperature 21 ℃CDB 14 ℃CWB TC	SHC	23 ℃CDB 16 ℃CWB TC	SHC	26 ℃CDB 18 ℃CWB TC	SHC	27 ℃CDB 19 ℃CWB TC	SHC	28 ℃CDB 20 ℃CWB TC	SHC	31 ℃CDB 22 ℃CWB TC	SHC	33 ℃CDB 24 ℃CWB TC	SHC
Lo	10			1.51	1.42	1.80	1.61	1.95	1.64	2.08	1.65	2.32	1.79	2.41	1.75
	12			1.51	1.42	1.80	1.61	1.95	1.64	2.07	1.65	2.32	1.79	2.40	1.75
	14			1.51	1.42	1.80	1.61	1.95	1.64	2.07	1.65	2.31	1.78	2.39	1.74
	16			1.51	1.42	1.80	1.61	1.95	1.64	2.07	1.65	2.30	1.78	2.38	1.74
	18			1.51	1.42	1.80	1.61	1.95	1.64	2.06	1.65	2.29	1.78	2.37	1.74
	20			1.51	1.42	1.80	1.61	1.95	1.64	2.06	1.65	2.28	1.77	2.36	1.73
	22			1.51	1.42	1.80	1.61	1.95	1.64	2.05	1.64	2.25	1.76	2.33	1.72
6	24			1.50	1.42	1.80	1.61	1.95	1.64	2.04	1.64	2.22	1.75	2.30	1.71
(m^3/min)	26			1.50	1.42	1.79	1.60	1.93	1.63	2.02	1.63	2.19	1.74	2.26	1.70
	28	1.36	1.31	1.50	1.42	1.78	1.60	1.91	1.62	1.99	1.62	2.15	1.73	2.23	1.69
	30	1.36	1.31	1.50	1.42	1.77	1.59	1.90	1.62	1.97	1.61	2.12	1.72	2.19	1.68
	32	1.36	1.31	1.49	1.42	1.76	1.59	1.88	1.61	1.95	1.61	2.09	1.71	2.16	1.67
	34	1.36	1.31	1.49	1.42	1.75	1.59	1.85	1.60	1.92	1.59	2.04	1.69	2.12	1.65
	35	1.36	1.31	1.49	1.42	1.75	1.59	1.84	1.58	1.90	1.59	2.02	1.69	2.09	1.64
	36	1.36	1.31	1.48	1.41	1.73	1.58	1.83	1.59	1.88	1.58	1.99	1.67	2.05	1.63
	38	1.36	1.31	1.48	1.41	1.71	1.57	1.81	1.58	1.85	1.57	1.91	1.64	1.97	1.60
	39	1.36	1.31	1.48	1.41	1.70	1.57	1.80	1.58	1.83	1.56	1.88	1.63	1.93	1.59
	41	1.36	1.31	1.47	1.41	1.64	1.54	1.73	1.55	1.75	1.53	1.79	1.60	1.84	1.56
	43	1.36	1.31	1.47	1.41	1.59	1.52	1.66	1.52	1.67	1.50	1.71	1.57	1.75	1.53

Air flow	Ambient air temp. DB	WB	Indoor air temp. 16 ℃CDB	18 ℃CDB	20 ℃CDB	22 ℃CDB	24 ℃CDB
Lo	-19.8	-20	1.13	1.13	1.13	1.13	1.13
	-17.8	-18	1.20	1.20	1.20	1.20	1.20
	-15.7	-16	1.28	1.28	1.28	1.28	1.28
	-13.7	-14	1.35	1.35	1.35	1.35	1.35
	-11.7	-12	1.42	1.42	1.42	1.42	1.42
	-9.6	-10	1.50	1.50	1.50	1.50	1.50
	-7.5	-8	1.59	1.59	1.59	1.59	1.59
6	-5.5	-6	1.68	1.68	1.68	1.68	1.68
(m^3/min)	-3.4	-4	1.74	1.73	1.73	1.71	1.70
	-1.3	-2	1.79	1.79	1.78	1.75	1.72
	0.8	0	1.89	1.86	1.84	1.77	1.71
	3.9	3	2.05	1.98	1.91	1.80	1.69
	7.0	6	2.24	2.10	1.95	1.81	1.68
	10.1	9	2.23	2.09	1.94	1.80	1.66
	13.2	12	2.21	2.07	1.93	1.79	1.65
	16.9	15.5	2.20	2.05	1.91	1.77	1.63

Note(1) This data shows average statuses out of those possible to occur in the system control.
(Depending on controls, there may be ranges where the operation is not conducted continuously.)
(2) Symbols are as follows
TC :Total cooling capacity(kW)
SHC :Sensible heat capacity(kW)

Cool mode	Uhi	Hi	Me	Lo
Air flow	9.00	8	7	6
TC	2.35	2.20	2.03	1.84
SHF	0.94	0.91	0.88	0.86

Heat mode	Uhi	Hi	Me	Lo
Air flow	9	8	7	6
Heating capacity	2.76	2.50	2.23	1.95

Model **FDK28KXE6**

Cool Mode

Air flow	Ambient air temp. (°CDB)	Indoor air temperature 21 °CDB 14 °CWB TC	21 °CDB 14 °CWB SHC	23 °CDB 16 °CWB TC	23 °CDB 16 °CWB SHC	26 °CDB 18 °CWB TC	26 °CDB 18 °CWB SHC	27 °CDB 19 °CWB TC	27 °CDB 19 °CWB SHC	28 °CDB 20 °CWB TC	28 °CDB 20 °CWB SHC	31 °CDB 22 °CWB TC	31 °CDB 22 °CWB SHC	33 °CDB 24 °CWB TC	33 °CDB 24 °CWB SHC
Uhi	10			2.46	2.19	2.94	2.48	3.18	2.52	3.38	2.55	3.79	2.76	3.93	2.70
	12			2.46	2.19	2.94	2.48	3.18	2.52	3.38	2.55	3.78	2.76	3.92	2.69
	14			2.46	2.19	2.94	2.48	3.18	2.52	3.37	2.55	3.76	2.75	3.90	2.69
	16			2.46	2.19	2.94	2.48	3.18	2.52	3.37	2.55	3.75	2.75	3.88	2.68
	18			2.46	2.19	2.94	2.48	3.18	2.52	3.36	2.55	3.73	2.74	3.87	2.68
	20			2.46	2.19	2.94	2.48	3.18	2.52	3.36	2.55	3.72	2.74	3.85	2.67
	22			2.46	2.19	2.94	2.48	3.18	2.52	3.34	2.54	3.67	2.72	3.80	2.66
9	24			2.45	2.19	2.94	2.48	3.18	2.52	3.33	2.54	3.63	2.71	3.75	2.64
(m^3/min)	26			2.45	2.19	2.92	2.47	3.15	2.51	3.29	2.52	3.57	2.69	3.69	2.62
	28	2.22	2.13	2.45	2.19	2.91	2.47	3.12	2.50	3.25	2.50	3.51	2.67	3.63	2.60
	30	2.22	2.13	2.44	2.18	2.89	2.46	3.09	2.49	3.21	2.49	3.46	2.65	3.58	2.59
	32	2.22	2.13	2.44	2.18	2.87	2.45	3.06	2.48	3.18	2.47	3.41	2.63	3.52	2.56
	34	2.22	2.13	2.43	2.18	2.86	2.45	3.02	2.46	3.12	2.45	3.33	2.60	3.45	2.54
	35	2.22	2.13	2.42	2.17	2.85	2.44	3.00	2.46	3.10	2.44	3.30	2.59	3.41	2.53
	36	2.22	2.13	2.42	2.17	2.83	2.44	2.99	2.45	3.07	2.43	3.24	2.57	3.35	2.51
	38	2.22	2.13	2.42	2.17	2.79	2.42	2.96	2.44	3.01	2.41	3.12	2.53	3.21	2.46
	39	2.22	2.13	2.41	2.17	2.76	2.41	2.94	2.43	2.98	2.40	3.06	2.51	3.15	2.45
	41	2.22	2.13	2.40	2.17	2.68	2.38	2.82	2.39	2.85	2.35	2.92	2.46	3.00	2.40
	43	2.22	2.13	2.40	2.17	2.60	2.34	2.70	2.34	2.73	2.31	2.79	2.42	2.85	2.36

Heat Mode

Air flow	Ambient air temp. DB	Ambient air temp. WB	Indoor air temp. 16 °CDB	18 °CDB	20 °CDB	22 °CDB	24 °CDB
Uhi	-19.8	-20	2.05	2.05	2.05	2.05	2.05
	-17.8	-18	2.18	2.18	2.18	2.18	2.18
	-15.7	-16	2.31	2.31	2.31	2.31	2.31
	-13.7	-14	2.44	2.44	2.44	2.44	2.44
	-11.7	-12	2.57	2.57	2.57	2.57	2.57
	-9.6	-10	2.71	2.71	2.71	2.71	2.71
	-7.5	-8	2.87	2.87	2.87	2.87	2.87
9	-5.5	-6	3.04	3.04	3.04	3.04	3.04
(m^3/min)	-3.4	-4	3.14	3.14	3.13	3.10	3.07
	-1.3	-2	3.25	3.24	3.23	3.17	3.11
	0.8	0	3.42	3.38	3.33	3.21	3.09
	3.9	3	3.72	3.58	3.45	3.26	3.06
	7.0	6	4.06	3.79	3.53	3.28	3.04
	10.1	9	4.03	3.77	3.52	3.26	3.01
	13.2	12	4.01	3.75	3.49	3.24	2.98
	16.9	15.5	3.98	3.72	3.46	3.21	2.95

Air flow	Ambient air temp. (°CDB)	Indoor air temperature 21 °CDB 14 °CWB TC	21 °CDB 14 °CWB SHC	23 °CDB 16 °CWB TC	23 °CDB 16 °CWB SHC	26 °CDB 18 °CWB TC	26 °CDB 18 °CWB SHC	27 °CDB 19 °CWB TC	27 °CDB 19 °CWB SHC	28 °CDB 20 °CWB TC	28 °CDB 20 °CWB SHC	31 °CDB 22 °CWB TC	31 °CDB 22 °CWB SHC	33 °CDB 24 °CWB TC	33 °CDB 24 °CWB SHC
Hi	10			2.30	2.01	2.74	2.27	2.97	2.32	3.16	2.34	3.54	2.53	3.67	2.47
	12			2.30	2.01	2.74	2.27	2.97	2.32	3.15	2.34	3.52	2.52	3.66	2.46
	14			2.30	2.01	2.74	2.27	2.97	2.32	3.15	2.34	3.51	2.52	3.64	2.46
	16			2.30	2.01	2.74	2.27	2.97	2.32	3.14	2.33	3.50	2.52	3.63	2.46
	18			2.30	2.01	2.74	2.27	2.97	2.32	3.14	2.33	3.49	2.51	3.61	2.45
	20			2.30	2.01	2.74	2.27	2.97	2.32	3.14	2.33	3.47	2.51	3.59	2.44
	22			2.29	2.01	2.74	2.27	2.97	2.32	3.12	2.33	3.43	2.49	3.54	2.43
8	24			2.29	2.01	2.74	2.27	2.97	2.32	3.11	2.32	3.39	2.48	3.50	2.41
(m^3/min)	26			2.29	2.01	2.73	2.26	2.94	2.30	3.07	2.31	3.33	2.46	3.44	2.39
	28	2.07	1.99	2.28	2.00	2.72	2.26	2.91	2.29	3.03	2.29	3.28	2.44	3.39	2.38
	30	2.07	1.99	2.28	2.00	2.70	2.25	2.88	2.28	3.00	2.28	3.23	2.42	3.34	2.36
	32	2.07	1.99	2.27	2.00	2.67	2.24	2.86	2.27	2.96	2.26	3.18	2.40	3.29	2.35
	34	2.07	1.99	2.27	2.00	2.66	2.23	2.82	2.26	2.92	2.25	3.11	2.38	3.22	2.32
	35	2.07	1.99	2.26	1.99	2.66	2.23	2.80	2.24	2.89	2.24	3.08	2.37	3.18	2.31
	36	2.07	1.99	2.26	1.99	2.64	2.23	2.79	2.24	2.86	2.23	3.02	2.35	3.12	2.29
	38	2.07	1.99	2.25	1.99	2.60	2.21	2.76	2.23	2.81	2.20	2.91	2.31	3.00	2.25
	39	2.07	1.99	2.25	1.99	2.58	2.20	2.74	2.22	2.78	2.19	2.86	2.29	2.94	2.23
	41	2.07	1.99	2.24	1.99	2.50	2.17	2.63	2.18	2.66	2.15	2.73	2.24	2.80	2.19
	43	2.07	1.99	2.24	1.99	2.43	2.14	2.52	2.14	2.55	2.11	2.60	2.20	2.66	2.14

Air flow	Ambient air temp. DB	Ambient air temp. WB	Indoor air temp. 16 °CDB	18 °CDB	20 °CDB	22 °CDB	24 °CDB
Hi	-19.8	-20	1.86	1.86	1.86	1.86	1.86
	-17.8	-18	1.98	1.98	1.98	1.98	1.98
	-15.7	-16	2.09	2.09	2.09	2.09	2.09
	-13.7	-14	2.21	2.21	2.21	2.21	2.21
	-11.7	-12	2.33	2.33	2.33	2.33	2.33
	-9.6	-10	2.45	2.45	2.45	2.45	2.45
	-7.5	-8	2.60	2.60	2.60	2.60	2.60
8	-5.5	-6	2.75	2.75	2.75	2.75	2.75
(m^3/min)	-3.4	-4	2.85	2.84	2.84	2.81	2.78
	-1.3	-2	2.94	2.94	2.93	2.87	2.82
	0.8	0	3.10	3.06	3.02	2.91	2.80
	3.9	3	3.37	3.25	3.13	2.95	2.78
	7.0	6	3.68	3.44	3.20	2.98	2.75
	10.1	9	3.66	3.42	3.19	2.96	2.73
	13.2	12	3.63	3.40	3.17	2.94	2.70
	16.9	15.5	3.60	3.37	3.14	2.91	2.68

Air flow	Ambient air temp. (°CDB)	Indoor air temperature 21 °CDB 14 °CWB TC	21 °CDB 14 °CWB SHC	23 °CDB 16 °CWB TC	23 °CDB 16 °CWB SHC	26 °CDB 18 °CWB TC	26 °CDB 18 °CWB SHC	27 °CDB 19 °CWB TC	27 °CDB 19 °CWB SHC	28 °CDB 20 °CWB TC	28 °CDB 20 °CWB SHC	31 °CDB 22 °CWB TC	31 °CDB 22 °CWB SHC	33 °CDB 24 °CWB TC	33 °CDB 24 °CWB SHC
Me	10			2.12	1.81	2.54	2.05	2.75	2.10	2.92	2.12	3.27	2.29	3.40	2.24
	12			2.12	1.81	2.54	2.05	2.75	2.10	2.92	2.12	3.26	2.29	3.38	2.23
	14			2.12	1.81	2.54	2.05	2.75	2.10	2.91	2.11	3.25	2.28	3.37	2.22
	16			2.12	1.81	2.54	2.05	2.75	2.10	2.91	2.11	3.24	2.28	3.35	2.22
	18			2.12	1.81	2.54	2.05	2.75	2.10	2.91	2.11	3.22	2.27	3.34	2.21
	20			2.12	1.81	2.54	2.05	2.75	2.10	2.90	2.11	3.21	2.27	3.32	2.21
	22			2.12	1.81	2.54	2.05	2.75	2.10	2.89	2.11	3.17	2.25	3.28	2.19
7	24			2.12	1.81	2.54	2.05	2.75	2.10	2.87	2.10	3.13	2.24	3.23	2.18
(m^3/min)	26			2.12	1.81	2.52	2.05	2.72	2.08	2.84	2.09	3.08	2.22	3.18	2.16
	28	1.92	1.79	2.11	1.81	2.51	2.04	2.69	2.07	2.81	2.08	3.03	2.20	3.13	2.14
	30	1.92	1.79	2.11	1.81	2.49	2.03	2.67	2.06	2.77	2.06	2.99	2.19	3.09	2.13
	32	1.92	1.79	2.10	1.81	2.47	2.03	2.64	2.05	2.74	2.05	2.94	2.17	3.04	2.11
	34	1.92	1.79	2.10	1.81	2.46	2.02	2.61	2.04	2.70	2.03	2.88	2.15	2.98	2.10
	35	1.92	1.79	2.09	1.80	2.46	2.02	2.59	2.02	2.68	2.03	2.85	2.14	2.95	2.09
	36	1.92	1.79	2.09	1.80	2.44	2.01	2.58	2.03	2.65	2.01	2.80	2.12	2.89	2.07
	38	1.92	1.79	2.08	1.80	2.40	2.00	2.55	2.02	2.60	1.99	2.69	2.08	2.77	2.03
	39	1.92	1.79	2.08	1.80	2.39	1.99	2.54	2.01	2.57	1.98	2.64	2.06	2.72	2.01
	41	1.92	1.79	2.08	1.80	2.31	1.96	2.43	1.97	2.46	1.94	2.53	2.02	2.59	1.97
	43	1.92	1.79	2.07	1.79	2.24	1.93	2.33	1.93	2.36	1.90	2.41	1.98	2.46	1.92

Air flow	Ambient air temp. DB	Ambient air temp. WB	Indoor air temp. 16 °CDB	18 °CDB	20 °CDB	22 °CDB	24 °CDB
Me	-19.8	-20	1.66	1.66	1.66	1.66	1.66
	-17.8	-18	1.77	1.77	1.77	1.77	1.77
	-15.7	-16	1.87	1.87	1.87	1.87	1.87
	-13.7	-14	1.98	1.98	1.98	1.98	1.98
	-11.7	-12	2.09	2.09	2.09	2.09	2.09
	-9.6	-10	2.19	2.19	2.19	2.19	2.19
	-7.5	-8	2.33	2.33	2.33	2.33	2.33
7	-5.5	-6	2.46	2.46	2.46	2.46	2.46
(m^3/min)	-3.4	-4	2.55	2.54	2.54	2.51	2.49
	-1.3	-2	2.63	2.62	2.62	2.57	2.52
	0.8	0	2.77	2.73	2.70	2.60	2.50
	3.9	3	3.01	2.90	2.80	2.64	2.48
	7.0	6	3.29	3.07	2.86	2.66	2.46
	10.1	9	3.27	3.06	2.85	2.64	2.44
	13.2	12	3.25	3.04	2.83	2.62	2.42
	16.9	15.5	3.22	3.01	2.81	2.60	2.39

Air flow	Ambient air temp. (°CDB)	Indoor air temperature 21 °CDB 14 °CWB TC	21 °CDB 14 °CWB SHC	23 °CDB 16 °CWB TC	23 °CDB 16 °CWB SHC	26 °CDB 18 °CWB TC	26 °CDB 18 °CWB SHC	27 °CDB 19 °CWB TC	27 °CDB 19 °CWB SHC	28 °CDB 20 °CWB TC	28 °CDB 20 °CWB SHC	31 °CDB 22 °CWB TC	31 °CDB 22 °CWB SHC	33 °CDB 24 °CWB TC	33 °CDB 24 °CWB SHC
Lo	10			1.92	1.61	2.29	1.81	2.48	1.85	2.64	1.88	2.96	2.03	3.07	1.98
	12			1.92	1.61	2.29	1.81	2.48	1.85	2.64	1.88	2.95	2.02	3.06	1.97
	14			1.92	1.61	2.29	1.81	2.48	1.85	2.63	1.87	2.93	2.02	3.04	1.97
	16			1.92	1.61	2.29	1.81	2.48	1.85	2.63	1.87	2.92	2.01	3.03	1.96
	18			1.92	1.61	2.29	1.81	2.48	1.85	2.62	1.87	2.91	2.01	3.02	1.96
	20			1.92	1.61	2.29	1.81	2.48	1.85	2.62	1.87	2.90	2.01	3.00	1.95
	22			1.92	1.61	2.29	1.81	2.48	1.85	2.61	1.86	2.87	1.99	2.96	1.94
6	24			1.91	1.60	2.29	1.81	2.48	1.85	2.60	1.86	2.83	1.98	2.92	1.92
(m^3/min)	26			1.91	1.60	2.28	1.81	2.46	1.84	2.57	1.85	2.78	1.96	2.88	1.91
	28	1.73	1.58	1.91	1.60	2.27	1.81	2.43	1.83	2.54	1.84	2.74	1.95	2.83	1.89
	30	1.73	1.58	1.90	1.60	2.25	1.80	2.41	1.82	2.51	1.82	2.70	1.93	2.79	1.88
	32	1.73	1.58	1.90	1.60	2.23	1.79	2.39	1.82	2.48	1.81	2.66	1.92	2.75	1.87
	34	1.73	1.58	1.89	1.59	2.23	1.79	2.36	1.80	2.44	1.80	2.60	1.89	2.69	1.85
	35	1.73	1.58	1.89	1.59	2.22	1.78	2.34	1.78	2.42	1.79	2.57	1.88	2.66	1.84
	36	1.73	1.58	1.89	1.59	2.21	1.78	2.33	1.79	2.39	1.78	2.53	1.87	2.61	1.82
	38	1.73	1.58	1.88	1.59	2.17	1.76	2.30	1.78	2.35	1.76	2.43	1.83	2.51	1.79
	39	1.73	1.58	1.88	1.59	2.16	1.76	2.29	1.78	2.32	1.75	2.39	1.82	2.45	1.77
	41	1.73	1.58	1.87	1.58	2.09	1.73	2.20	1.74	2.23	1.72	2.28	1.78	2.34	1.73
	43	1.73	1.58	1.87	1.58	2.03	1.71	2.11	1.70	2.13	1.68	2.18	1.75	2.22	1.69

Air flow	Ambient air temp. DB	Ambient air temp. WB	Indoor air temp. 16 °CDB	18 °CDB	20 °CDB	22 °CDB	24 °CDB
Lo	-19.8	-20	1.45	1.45	1.45	1.45	1.45
	-17.8	-18	1.54	1.54	1.54	1.54	1.54
	-15.7	-16	1.64	1.64	1.64	1.64	1.64
	-13.7	-14	1.73	1.73	1.73	1.73	1.73
	-11.7	-12	1.82	1.82	1.82	1.82	1.82
	-9.6	-10	1.92	1.92	1.92	1.92	1.92
	-7.5	-8	2.03	2.03	2.03	2.03	2.03
6	-5.5	-6	2.15	2.15	2.15	2.15	2.15
(m^3/min)	-3.4	-4	2.23	2.22	2.22	2.20	2.18
	-1.3	-2	2.30	2.29	2.29	2.24	2.20
	0.8	0	2.43	2.39	2.36	2.27	2.19
	3.9	3	2.63	2.54	2.44	2.31	2.17
	7.0	6	2.88	2.69	2.50	2.33	2.15
	10.1	9	2.86	2.67	2.49	2.31	2.13
	13.2	12	2.84	2.66	2.48	2.29	2.11
	16.9	15.5	2.82	2.63	2.45	2.27	2.09

Note(1) This data shows average statuses out of those possible to occur in the system control.
(Depending on controls, there may be ranges where the operation is not conducted continuously.)
(2) Symbols are as follows
TC :Total cooling capacity(kW)
SHC :Sensible heat capacity(kW)

Cool mode	Uhi	Hi	Me	Lo
Air flow	9.00	8	7	6
TC	3.00	2.80	2.59	2.34
SHF	0.82	0.80	0.78	0.76

Heat mode	Uhi	Hi	Me	Lo
Air flow	9	8	7	6
Heating capacity	3.53	3.20	2.86	2.50

Model **FDK36KXE6** Cool Mode

Air flow	Ambient air temp. (℃DB)	Indoor air temperature 21 ℃DB 14 ℃WB TC	21 ℃DB 14 ℃WB SHC	23 ℃DB 16 ℃WB TC	23 ℃DB 16 ℃WB SHC	26 ℃DB 18 ℃WB TC	26 ℃DB 18 ℃WB SHC	27 ℃DB 19 ℃WB TC	27 ℃DB 19 ℃WB SHC	28 ℃DB 20 ℃WB TC	28 ℃DB 20 ℃WB SHC	31 ℃DB 22 ℃WB TC	31 ℃DB 22 ℃WB SHC	33 ℃DB 24 ℃WB TC	33 ℃DB 24 ℃WB SHC
	10			3.10	2.71	3.70	3.05	4.01	3.12	4.26	3.16	4.78	3.42	4.96	3.33
	12			3.10	2.71	3.70	3.05	4.01	3.12	4.26	3.16	4.76	3.41	4.94	3.32
	14			3.10	2.71	3.70	3.05	4.01	3.12	4.25	3.15	4.74	3.40	4.92	3.32
	16			3.10	2.71	3.70	3.05	4.01	3.12	4.25	3.15	4.72	3.39	4.89	3.31
	18			3.10	2.71	3.70	3.05	4.01	3.12	4.24	3.15	4.71	3.39	4.87	3.30
Uhi	20			3.10	2.71	3.70	3.05	4.01	3.12	4.23	3.14	4.69	3.38	4.85	3.29
	22			3.09	2.71	3.70	3.05	4.01	3.12	4.21	3.14	4.63	3.36	4.79	3.28
11	24			3.09	2.71	3.70	3.05	4.01	3.12	4.19	3.13	4.57	3.34	4.72	3.25
(m^3/min)	26			3.09	2.71	3.68	3.04	3.97	3.10	4.15	3.11	4.50	3.31	4.65	3.23
	28	2.80	2.68	3.08	2.70	3.67	3.04	3.93	3.09	4.10	3.09	4.43	3.29	4.57	3.21
	30	2.80	2.68	3.08	2.70	3.64	3.02	3.89	3.07	4.05	3.07	4.36	3.26	4.51	3.19
	32	2.80	2.68	3.07	2.70	3.61	3.01	3.86	3.05	4.00	3.05	4.29	3.24	4.44	3.16
	34	2.80	2.68	3.06	2.69	3.60	3.01	3.81	3.03	3.94	3.02	4.20	3.20	4.35	3.13
	35	2.80	2.68	3.05	2.69	3.59	3.00	3.78	3.02	3.91	3.01	4.16	3.19	4.30	3.11
	36	2.80	2.68	3.05	2.69	3.56	2.99	3.76	3.01	3.87	2.99	4.08	3.16	4.22	3.09
	38	2.80	2.68	3.04	2.68	3.51	2.97	3.72	3.00	3.79	2.96	3.93	3.11	4.05	3.04
	39	2.80	2.68	3.04	2.68	3.48	2.96	3.70	2.99	3.76	2.95	3.86	3.09	3.97	3.01
	41	2.80	2.68	3.03	2.68	3.38	2.92	3.55	2.93	3.60	2.89	3.69	3.03	3.78	2.95
	43	2.80	2.68	3.02	2.68	3.27	2.88	3.40	2.87	3.44	2.83	3.51	2.96	3.59	2.89

Heat Mode

Air flow	Ambient air temp. DB	Ambient air temp. WB	Indoor air temp. 16 ℃CDB	18 ℃CDB	20 ℃CDB	22 ℃CDB	24 ℃CDB
	-19.8	-20	2.50	2.50	2.50	2.50	2.50
	-17.8	-18	2.66	2.66	2.66	2.66	2.66
	-15.7	-16	2.82	2.82	2.82	2.82	2.82
	-13.7	-14	2.98	2.98	2.98	2.98	2.98
	-11.7	-12	3.14	3.14	3.14	3.14	3.14
Uhi	-9.6	-10	3.30	3.30	3.30	3.30	3.30
	-7.5	-8	3.51	3.51	3.51	3.51	3.51
11	-5.5	-6	3.71	3.71	3.71	3.71	3.71
(m^3/min)	-3.4	-4	3.84	3.83	3.83	3.79	3.75
	-1.3	-2	3.97	3.95	3.94	3.87	3.79
	0.8	0	4.18	4.12	4.06	3.92	3.77
	3.9	3	4.54	4.37	4.21	3.98	3.74
	7.0	6	4.96	4.63	4.31	4.01	3.71
	10.1	9	4.92	4.61	4.29	3.98	3.67
	13.2	12	4.89	4.58	4.27	3.95	3.64
	16.9	15.5	4.85	4.54	4.23	3.92	3.60

Air flow	Ambient air temp. (℃DB)	Indoor air temperature 21 ℃DB 14 ℃WB TC	21 ℃DB 14 ℃WB SHC	23 ℃DB 16 ℃WB TC	23 ℃DB 16 ℃WB SHC	26 ℃DB 18 ℃WB TC	26 ℃DB 18 ℃WB SHC	27 ℃DB 19 ℃WB TC	27 ℃DB 19 ℃WB SHC	28 ℃DB 20 ℃WB TC	28 ℃DB 20 ℃WB SHC	31 ℃DB 22 ℃WB TC	31 ℃DB 22 ℃WB SHC	33 ℃DB 24 ℃WB TC	33 ℃DB 24 ℃WB SHC
	10			2.95	2.52	3.53	2.85	3.82	2.91	4.06	2.94	4.55	3.18	4.72	3.10
	12			2.95	2.52	3.53	2.85	3.82	2.91	4.05	2.94	4.53	3.17	4.70	3.10
	14			2.95	2.52	3.53	2.85	3.82	2.91	4.05	2.94	4.51	3.17	4.68	3.09
	16			2.95	2.52	3.53	2.85	3.82	2.91	4.04	2.93	4.50	3.16	4.66	3.08
	18			2.95	2.52	3.53	2.85	3.82	2.91	4.04	2.93	4.48	3.15	4.64	3.08
Hi	20			2.95	2.52	3.53	2.85	3.82	2.91	4.03	2.93	4.47	3.15	4.62	3.07
	22			2.95	2.52	3.53	2.85	3.82	2.91	4.01	2.92	4.41	3.13	4.56	3.05
10	24			2.94	2.51	3.52	2.84	3.82	2.91	3.99	2.91	4.35	3.11	4.49	3.02
(m^3/min)	26			2.94	2.51	3.51	2.84	3.78	2.89	3.95	2.90	4.28	3.08	4.43	3.00
	28	2.66	2.49	2.94	2.51	3.49	2.83	3.74	2.88	3.90	2.88	4.22	3.06	4.36	2.98
	30	2.66	2.49	2.93	2.51	3.47	2.82	3.71	2.87	3.86	2.86	4.15	3.03	4.29	2.96
	32	2.66	2.49	2.92	2.51	3.44	2.81	3.67	2.85	3.81	2.84	4.09	3.01	4.23	2.94
	34	2.66	2.49	2.91	2.50	3.43	2.81	3.62	2.83	3.75	2.82	4.00	2.98	4.14	2.91
	35	2.66	2.49	2.91	2.50	3.42	2.80	3.60	2.81	3.72	2.81	3.96	2.97	4.09	2.89
	36	2.66	2.49	2.91	2.50	3.39	2.78	3.58	2.81	3.68	2.79	3.89	2.94	4.02	2.87
	38	2.66	2.49	2.90	2.50	3.34	2.76	3.55	2.80	3.61	2.75	3.74	2.89	3.86	2.82
	39	2.66	2.49	2.89	2.49	3.32	2.75	3.53	2.79	3.58	2.74	3.67	2.86	3.78	2.79
	41	2.66	2.49	2.88	2.49	3.22	2.71	3.38	2.72	3.43	2.69	3.51	2.81	3.60	2.73
	43	2.66	2.49	2.87	2.49	3.12	2.67	3.24	2.67	3.28	2.63	3.35	2.75	3.42	2.67

Air flow	Ambient air temp. DB	Ambient air temp. WB	Indoor air temp. 16 ℃CDB	18 ℃CDB	20 ℃CDB	22 ℃CDB	24 ℃CDB
	-19.8	-20	2.32	2.32	2.32	2.32	2.32
	-17.8	-18	2.47	2.47	2.47	2.47	2.47
	-15.7	-16	2.62	2.62	2.62	2.62	2.62
	-13.7	-14	2.77	2.77	2.77	2.77	2.77
	-11.7	-12	2.92	2.92	2.92	2.92	2.92
Hi	-9.6	-10	3.07	3.07	3.07	3.07	3.07
	-7.5	-8	3.25	3.25	3.25	3.25	3.25
10	-5.5	-6	3.44	3.44	3.44	3.44	3.44
(m^3/min)	-3.4	-4	3.56	3.56	3.55	3.52	3.48
	-1.3	-2	3.68	3.67	3.66	3.59	3.52
	0.8	0	3.88	3.83	3.77	3.64	3.50
	3.9	3	4.21	4.06	3.91	3.69	3.47
	7.0	6	4.60	4.30	4.00	3.72	3.44
	10.1	9	4.57	4.28	3.99	3.70	3.41
	13.2	12	4.54	4.25	3.96	3.67	3.38
	16.9	15.5	4.51	4.22	3.93	3.64	3.35

Air flow	Ambient air temp. (℃DB)	Indoor air temperature 21 ℃DB 14 ℃WB TC	21 ℃DB 14 ℃WB SHC	23 ℃DB 16 ℃WB TC	23 ℃DB 16 ℃WB SHC	26 ℃DB 18 ℃WB TC	26 ℃DB 18 ℃WB SHC	27 ℃DB 19 ℃WB TC	27 ℃DB 19 ℃WB SHC	28 ℃DB 20 ℃WB TC	28 ℃DB 20 ℃WB SHC	31 ℃DB 22 ℃WB TC	31 ℃DB 22 ℃WB SHC	33 ℃DB 24 ℃WB TC	33 ℃DB 24 ℃WB SHC
	10			2.79	2.33	3.33	2.64	3.60	2.70	3.83	2.73	4.30	2.95	4.46	2.88
	12			2.79	2.33	3.33	2.64	3.60	2.70	3.83	2.73	4.28	2.94	4.44	2.87
	14			2.79	2.33	3.33	2.64	3.60	2.70	3.82	2.72	4.26	2.94	4.42	2.86
	16			2.79	2.33	3.33	2.64	3.60	2.70	3.82	2.72	4.25	2.93	4.40	2.86
	18			2.79	2.33	3.33	2.64	3.60	2.70	3.81	2.72	4.23	2.93	4.38	2.85
Me	20			2.79	2.33	3.33	2.64	3.60	2.70	3.81	2.72	4.22	2.92	4.36	2.84
	22			2.78	2.33	3.33	2.64	3.60	2.70	3.79	2.71	4.16	2.90	4.30	2.82
9	24			2.78	2.33	3.33	2.64	3.60	2.70	3.77	2.70	4.11	2.88	4.24	2.80
(m^3/min)	26			2.78	2.33	3.31	2.63	3.57	2.68	3.73	2.69	4.05	2.86	4.18	2.78
	28	2.52	2.30	2.77	2.32	3.30	2.63	3.54	2.67	3.68	2.67	3.98	2.84	4.11	2.76
	30	2.52	2.30	2.77	2.32	3.27	2.62	3.50	2.66	3.64	2.65	3.92	2.81	4.05	2.74
	32	2.52	2.30	2.76	2.32	3.25	2.61	3.47	2.64	3.60	2.64	3.86	2.79	3.99	2.72
	34	2.52	2.30	2.75	2.31	3.24	2.61	3.42	2.62	3.54	2.62	3.78	2.76	3.91	2.69
	35	2.52	2.30	2.75	2.31	3.23	2.60	3.40	2.62	3.51	2.60	3.74	2.75	3.87	2.68
	36	2.52	2.30	2.74	2.31	3.21	2.59	3.38	2.61	3.48	2.59	3.67	2.72	3.79	2.65
	38	2.52	2.30	2.74	2.31	3.16	2.57	3.35	2.60	3.41	2.57	3.54	2.68	3.64	2.60
	39	2.52	2.30	2.73	2.31	3.13	2.56	3.33	2.59	3.38	2.55	3.47	2.65	3.57	2.58
	41	2.52	2.30	2.72	2.30	3.04	2.52	3.20	2.53	3.24	2.50	3.31	2.59	3.40	2.52
	43	2.52	2.30	2.71	2.30	2.94	2.48	3.06	2.48	3.09	2.44	3.16	2.54	3.23	2.47

Air flow	Ambient air temp. DB	Ambient air temp. WB	Indoor air temp. 16 ℃CDB	18 ℃CDB	20 ℃CDB	22 ℃CDB	24 ℃CDB
	-19.8	-20	2.13	2.13	2.13	2.13	2.13
	-17.8	-18	2.27	2.27	2.27	2.27	2.27
	-15.7	-16	2.41	2.41	2.41	2.41	2.41
	-13.7	-14	2.55	2.55	2.55	2.55	2.55
	-11.7	-12	2.68	2.68	2.68	2.68	2.68
Me	-9.6	-10	2.82	2.82	2.82	2.82	2.82
	-7.5	-8	2.99	2.99	2.99	2.99	2.99
9	-5.5	-6	3.16	3.16	3.16	3.16	3.16
(m^3/min)	-3.4	-4	3.28	3.27	3.27	3.23	3.20
	-1.3	-2	3.39	3.38	3.37	3.30	3.24
	0.8	0	3.57	3.52	3.47	3.34	3.22
	3.9	3	3.87	3.74	3.60	3.39	3.19
	7.0	6	4.23	3.96	3.68	3.42	3.16
	10.1	9	4.20	3.94	3.67	3.40	3.14
	13.2	12	4.18	3.91	3.64	3.38	3.11
	16.9	15.5	4.14	3.88	3.61	3.34	3.08

Air flow	Ambient air temp. (℃DB)	Indoor air temperature 21 ℃DB 14 ℃WB TC	21 ℃DB 14 ℃WB SHC	23 ℃DB 16 ℃WB TC	23 ℃DB 16 ℃WB SHC	26 ℃DB 18 ℃WB TC	26 ℃DB 18 ℃WB SHC	27 ℃DB 19 ℃WB TC	27 ℃DB 19 ℃WB SHC	28 ℃DB 20 ℃WB TC	28 ℃DB 20 ℃WB SHC	31 ℃DB 22 ℃WB TC	31 ℃DB 22 ℃WB SHC	33 ℃DB 24 ℃WB TC	33 ℃DB 24 ℃WB SHC
	10			2.41	1.94	2.88	2.19	3.12	2.24	3.32	2.27	3.71	2.45	3.86	2.39
	12			2.41	1.94	2.88	2.19	3.12	2.24	3.31	2.27	3.70	2.44	3.84	2.38
	14			2.41	1.94	2.88	2.19	3.12	2.24	3.31	2.27	3.69	2.44	3.82	2.37
	16			2.41	1.94	2.88	2.19	3.12	2.24	3.30	2.26	3.67	2.43	3.81	2.37
	18			2.41	1.94	2.88	2.19	3.12	2.24	3.30	2.26	3.66	2.43	3.79	2.36
Lo	20			2.41	1.94	2.88	2.19	3.12	2.24	3.29	2.26	3.65	2.42	3.77	2.35
	22			2.41	1.94	2.88	2.19	3.12	2.24	3.28	2.26	3.60	2.40	3.72	2.34
7	24			2.40	1.93	2.88	2.19	3.12	2.24	3.26	2.25	3.55	2.39	3.67	2.32
(m^3/min)	26			2.40	1.93	2.87	2.18	3.09	2.23	3.22	2.23	3.50	2.37	3.61	2.30
	28	2.18	1.91	2.40	1.93	2.85	2.17	3.06	2.22	3.19	2.22	3.44	2.34	3.56	2.28
	30	2.18	1.91	2.39	1.93	2.83	2.17	3.03	2.20	3.15	2.20	3.39	2.33	3.50	2.26
	32	2.18	1.91	2.39	1.93	2.81	2.16	3.00	2.19	3.11	2.19	3.34	2.31	3.45	2.24
	34	2.18	1.91	2.38	1.92	2.80	2.15	2.96	2.17	3.06	2.16	3.27	2.28	3.38	2.22
	35	2.18	1.91	2.38	1.92	2.79	2.15	2.94	2.15	3.04	2.16	3.23	2.27	3.34	2.21
	36	2.18	1.91	2.37	1.92	2.77	2.14	2.93	2.16	3.01	2.14	3.17	2.24	3.28	2.18
	38	2.18	1.91	2.37	1.92	2.73	2.12	2.90	2.15	2.95	2.12	3.06	2.20	3.15	2.14
	39	2.18	1.91	2.36	1.91	2.71	2.11	2.88	2.14	2.92	2.11	3.00	2.18	3.08	2.12
	41	2.18	1.91	2.36	1.91	2.63	2.08	2.76	2.09	2.80	2.06	2.87	2.13	2.94	2.07
	43	2.18	1.91	2.35	1.91	2.55	2.05	2.65	2.05	2.68	2.02	2.73	2.08	2.80	2.03

Air flow	Ambient air temp. DB	Ambient air temp. WB	Indoor air temp. 16 ℃CDB	18 ℃CDB	20 ℃CDB	22 ℃CDB	24 ℃CDB
	-19.8	-20	1.73	1.73	1.73	1.73	1.73
	-17.8	-18	1.84	1.84	1.84	1.84	1.84
	-15.7	-16	1.95	1.95	1.95	1.95	1.95
	-13.7	-14	2.06	2.06	2.06	2.06	2.06
	-11.7	-12	2.17	2.17	2.17	2.17	2.17
Lo	-9.6	-10	2.28	2.28	2.28	2.28	2.28
	-7.5	-8	2.42	2.42	2.42	2.42	2.42
7	-5.5	-6	2.56	2.56	2.56	2.56	2.56
(m^3/min)	-3.4	-4	2.65	2.65	2.64	2.62	2.59
	-1.3	-2	2.74	2.73	2.73	2.67	2.62
	0.8	0	2.89	2.85	2.81	2.71	2.61
	3.9	3	3.14	3.02	2.91	2.75	2.59
	7.0	6	3.43	3.20	2.98	2.77	2.56
	10.1	9	3.40	3.19	2.97	2.75	2.54
	13.2	12	3.38	3.17	2.95	2.73	2.52
	16.9	15.5	3.36	3.14	2.92	2.71	2.49

Note(1) This data shows average statuses out of those possible to occur in the system control.
(Depending on controls, there may be ranges where the operation is not conducted continuously.)

(2) Symbols are as follows
TC :Total cooling capacity(kW)
SHC :Sensible heat capacity(kW)

Cool mode	Uhi	Hi	Me	Lo
Air flow	11.00	10	9	7
TC	3.78	3.60	3.40	2.94
SHF	0.80	0.78	0.77	0.73

Heat mode	Uhi	Hi	Me	Lo
Air flow	11	10	9	7
Heating capacity	4.31	4.00	3.68	2.98

Model **FDK45KXE6** Cool Mode

Air flow	Ambient air temp. (°CDB)	Indoor air temperature 21 °CDB 14 °CWB TC	21 °CDB 14 °CWB SHC	23 °CDB 16 °CWB TC	23 °CDB 16 °CWB SHC	26 °CDB 18 °CWB TC	26 °CDB 18 °CWB SHC	27 °CDB 19 °CWB TC	27 °CDB 19 °CWB SHC	28 °CDB 20 °CWB TC	28 °CDB 20 °CWB SHC	31 °CDB 22 °CWB TC	31 °CDB 22 °CWB SHC	33 °CDB 24 °CWB TC	33 °CDB 24 °CWB SHC
	10			3.89	3.48	4.64	3.93	5.02	4.00	5.35	4.05	5.99	4.38	6.22	4.28
	12			3.89	3.48	4.64	3.93	5.02	4.00	5.34	4.04	5.97	4.37	6.19	4.27
	14			3.89	3.48	4.64	3.93	5.02	4.00	5.33	4.04	5.94	4.36	6.16	4.26
	16			3.89	3.48	4.64	3.93	5.02	4.00	5.32	4.04	5.92	4.35	6.14	4.25
	18			3.89	3.48	4.64	3.93	5.02	4.00	5.32	4.04	5.90	4.34	6.11	4.24
Uhi	20			3.89	3.48	4.64	3.93	5.02	4.00	5.31	4.03	5.88	4.34	6.08	4.23
	22			3.88	3.47	4.64	3.93	5.02	4.00	5.28	4.02	5.81	4.31	6.00	4.20
14	24			3.87	3.47	4.64	3.93	5.02	4.00	5.26	4.01	5.73	4.28	5.92	4.18
(m³/min)	26			3.87	3.47	4.62	3.92	4.98	3.99	5.20	3.99	5.64	4.25	5.83	4.15
	28	3.51	3.37	3.87	3.47	4.60	3.91	4.93	3.97	5.14	3.97	5.55	4.22	5.74	4.12
	30	3.51	3.37	3.86	3.47	4.56	3.90	4.88	3.95	5.08	3.94	5.47	4.19	5.65	4.09
	32	3.51	3.37	3.85	3.46	4.53	3.88	4.83	3.93	5.02	3.92	5.38	4.16	5.56	4.06
	34	3.51	3.37	3.84	3.46	4.51	3.88	4.77	3.90	4.94	3.89	5.27	4.12	5.45	4.03
	35	3.51	3.37	3.83	3.45	4.50	3.87	4.74	3.89	4.90	3.88	5.21	4.10	5.39	4.01
	36	3.51	3.37	3.83	3.45	4.47	3.86	4.72	3.88	4.85	3.86	5.12	4.07	5.29	3.98
	38	3.51	3.37	3.82	3.45	4.40	3.83	4.67	3.86	4.76	3.82	4.93	4.01	5.08	3.91
	39	3.51	3.37	3.81	3.44	4.37	3.82	4.65	3.86	4.71	3.81	4.84	3.98	4.97	3.85
	41	3.51	3.37	3.80	3.44	4.24	3.76	4.46	3.78	4.51	3.73	4.62	3.90	4.74	3.78
	43	3.51	3.37	3.78	3.43	4.11	3.71	4.27	3.71	4.31	3.66	4.41	3.81	4.51	3.71

Heat Mode

Air flow	Ambient air temp. DB	Ambient air temp. WB	Indoor air temp. 16 °CDB	18 °CDB	20 °CDB	22 °CDB	24 °CDB
	-19.8	-20	3.13	3.13	3.13	3.13	3.13
	-17.8	-18	3.33	3.33	3.33	3.33	3.33
	-15.7	-16	3.53	3.53	3.53	3.53	3.53
	-13.7	-14	3.73	3.73	3.73	3.73	3.73
	-11.7	-12	3.93	3.93	3.93	3.93	3.93
Uhi	-9.6	-10	4.13	4.13	4.13	4.13	4.13
	-7.5	-8	4.38	4.38	4.38	4.38	4.38
14	-5.5	-6	4.64	4.64	4.64	4.64	4.64
(m³/min)	-3.4	-4	4.80	4.79	4.78	4.74	4.69
	-1.3	-2	4.96	4.95	4.93	4.84	4.74
	0.8	0	5.23	5.15	5.08	4.90	4.72
	3.9	3	5.67	5.47	5.27	4.97	4.68
	7.0	6	6.20	5.79	5.39	5.01	4.64
	10.1	9	6.16	5.76	5.37	4.98	4.59
	13.2	12	6.12	5.73	5.34	4.95	4.55
	16.9	15.5	6.07	5.68	5.29	4.90	4.51

Air flow	Ambient air temp. (°CDB)	Indoor air temperature 21 °CDB 14 °CWB TC	21 °CDB 14 °CWB SHC	23 °CDB 16 °CWB TC	23 °CDB 16 °CWB SHC	26 °CDB 18 °CWB TC	26 °CDB 18 °CWB SHC	27 °CDB 19 °CWB TC	27 °CDB 19 °CWB SHC	28 °CDB 20 °CWB TC	28 °CDB 20 °CWB SHC	31 °CDB 22 °CWB TC	31 °CDB 22 °CWB SHC	33 °CDB 24 °CWB TC	33 °CDB 24 °CWB SHC
	10			3.69	3.01	4.41	3.40	4.77	3.48	5.07	3.52	5.68	3.81	5.90	3.71
	12			3.69	3.01	4.41	3.40	4.77	3.48	5.07	3.52	5.66	3.80	5.88	3.70
	14			3.69	3.01	4.41	3.40	4.77	3.48	5.06	3.52	5.64	3.79	5.85	3.69
	16			3.69	3.01	4.41	3.40	4.77	3.48	5.05	3.51	5.62	3.78	5.83	3.69
	18			3.69	3.01	4.41	3.40	4.77	3.48	5.05	3.51	5.60	3.78	5.80	3.67
Hi	20			3.69	3.01	4.41	3.40	4.77	3.48	5.04	3.51	5.58	3.77	5.78	3.67
	22			3.68	3.01	4.41	3.40	4.77	3.48	5.02	3.50	5.51	3.74	5.70	3.63
11	24			3.68	3.01	4.41	3.40	4.77	3.48	4.99	3.49	5.44	3.71	5.62	3.61
(m³/min)	26			3.68	3.01	4.39	3.39	4.73	3.46	4.93	3.47	5.35	3.68	5.53	3.58
	28	3.33	2.96	3.67	3.00	4.37	3.39	4.68	3.44	4.88	3.44	5.27	3.65	5.44	3.55
	30	3.33	2.96	3.66	3.00	4.33	3.37	4.64	3.43	4.82	3.42	5.19	3.62	5.36	3.52
	32	3.33	2.96	3.65	3.00	4.30	3.36	4.59	3.40	4.76	3.40	5.11	3.59	5.28	3.49
	34	3.33	2.96	3.64	2.99	4.28	3.35	4.53	3.38	4.69	3.37	5.00	3.55	5.17	3.45
	35	3.33	2.96	3.64	2.99	4.28	3.35	4.50	3.38	4.65	3.35	4.95	3.53	5.12	3.44
	36	3.33	2.96	3.63	2.99	4.24	3.33	4.48	3.36	4.60	3.33	4.86	3.49	5.02	3.40
	38	3.33	2.96	3.62	2.98	4.18	3.31	4.43	3.34	4.52	3.30	4.68	3.43	4.82	3.34
	39	3.33	2.96	3.62	2.98	4.15	3.29	4.41	3.33	4.47	3.28	4.59	3.40	4.72	3.30
	41	3.33	2.96	3.61	2.98	4.02	3.24	4.23	3.26	4.28	3.21	4.39	3.33	4.50	3.23
	43	3.33	2.96	3.59	2.97	3.90	3.19	4.05	3.19	4.09	3.14	4.18	3.25	4.28	3.16

Air flow	Ambient air temp. DB	Ambient air temp. WB	Indoor air temp. 16 °CDB	18 °CDB	20 °CDB	22 °CDB	24 °CDB
	-19.8	-20	2.90	2.90	2.90	2.90	2.90
	-17.8	-18	3.09	3.09	3.09	3.09	3.09
	-15.7	-16	3.27	3.27	3.27	3.27	3.27
	-13.7	-14	3.46	3.46	3.46	3.46	3.46
	-11.7	-12	3.65	3.65	3.65	3.65	3.65
Hi	-9.6	-10	3.83	3.83	3.83	3.83	3.83
	-7.5	-8	4.07	4.07	4.07	4.07	4.07
11	-5.5	-6	4.30	4.30	4.30	4.30	4.30
(m³/min)	-3.4	-4	4.45	4.44	4.44	4.39	4.35
	-1.3	-2	4.60	4.59	4.58	4.49	4.40
	0.8	0	4.85	4.78	4.71	4.54	4.38
	3.9	3	5.26	5.08	4.89	4.61	4.34
	7.0	6	5.75	5.38	5.00	4.65	4.30
	10.1	9	5.71	5.35	4.98	4.62	4.26
	13.2	12	5.68	5.31	4.95	4.59	4.23
	16.9	15.5	5.63	5.27	4.91	4.54	4.18

Air flow	Ambient air temp. (°CDB)	Indoor air temperature 21 °CDB 14 °CWB TC	21 °CDB 14 °CWB SHC	23 °CDB 16 °CWB TC	23 °CDB 16 °CWB SHC	26 °CDB 18 °CWB TC	26 °CDB 18 °CWB SHC	27 °CDB 19 °CWB TC	27 °CDB 19 °CWB SHC	28 °CDB 20 °CWB TC	28 °CDB 20 °CWB SHC	31 °CDB 22 °CWB TC	31 °CDB 22 °CWB SHC	33 °CDB 24 °CWB TC	33 °CDB 24 °CWB SHC
	10			3.25	2.57	3.88	2.90	4.20	2.97	4.47	3.02	5.00	3.25	5.19	3.16
	12			3.25	2.57	3.88	2.90	4.20	2.97	4.46	3.01	4.98	3.24	5.17	3.16
	14			3.25	2.57	3.88	2.90	4.20	2.97	4.45	3.01	4.97	3.24	5.15	3.15
	16			3.25	2.57	3.88	2.90	4.20	2.97	4.45	3.01	4.95	3.23	5.13	3.14
	18			3.25	2.57	3.88	2.90	4.20	2.97	4.44	3.01	4.93	3.22	5.10	3.13
Me	20			3.25	2.57	3.88	2.90	4.20	2.97	4.44	3.01	4.91	3.22	5.08	3.12
	22			3.24	2.56	3.88	2.90	4.20	2.97	4.42	2.99	4.85	3.19	5.01	3.10
9	24			3.24	2.56	3.88	2.90	4.20	2.97	4.39	2.98	4.79	3.17	4.94	3.08
(m³/min)	26			3.23	2.56	3.86	2.89	4.16	2.95	4.34	2.96	4.71	3.14	4.87	3.05
	28	2.93	2.52	3.23	2.56	3.84	2.88	4.12	2.94	4.29	2.94	4.64	3.11	4.79	3.02
	30	2.93	2.52	3.22	2.55	3.81	2.87	4.08	2.92	4.24	2.92	4.57	3.08	4.72	3.00
	32	2.93	2.52	3.22	2.55	3.78	2.86	4.04	2.90	4.19	2.90	4.50	3.05	4.65	2.97
	34	2.93	2.52	3.20	2.55	3.77	2.85	3.99	2.88	4.12	2.87	4.40	3.02	4.55	2.93
	35	2.93	2.52	3.20	2.55	3.76	2.85	3.96	2.89	4.09	2.86	4.35	3.00	4.50	2.92
	36	2.93	2.52	3.20	2.55	3.73	2.84	3.94	2.86	4.05	2.84	4.27	2.97	4.42	2.89
	38	2.93	2.52	3.19	2.54	3.68	2.82	3.90	2.85	3.97	2.81	4.12	2.91	4.24	2.83
	39	2.93	2.52	3.18	2.54	3.65	2.80	3.88	2.84	3.93	2.79	4.04	2.88	4.15	2.80
	41	2.93	2.52	3.17	2.53	3.54	2.76	3.72	2.77	3.77	2.73	3.86	2.82	3.96	2.74
	43	2.93	2.52	3.16	2.53	3.43	2.71	3.56	2.71	3.60	2.66	3.68	2.75	3.76	2.67

Air flow	Ambient air temp. DB	Ambient air temp. WB	Indoor air temp. 16 °CDB	18 °CDB	20 °CDB	22 °CDB	24 °CDB
	-19.8	-20	2.44	2.44	2.44	2.44	2.44
	-17.8	-18	2.59	2.59	2.59	2.59	2.59
	-15.7	-16	2.75	2.75	2.75	2.75	2.75
	-13.7	-14	2.91	2.91	2.91	2.91	2.91
	-11.7	-12	3.06	3.06	3.06	3.06	3.06
Me	-9.6	-10	3.22	3.22	3.22	3.22	3.22
	-7.5	-8	3.42	3.42	3.42	3.42	3.42
9	-5.5	-6	3.61	3.61	3.61	3.61	3.61
(m³/min)	-3.4	-4	3.74	3.73	3.73	3.69	3.65
	-1.3	-2	3.86	3.85	3.84	3.77	3.70
	0.8	0	4.07	4.02	3.96	3.82	3.68
	3.9	3	4.42	4.26	4.11	3.87	3.64
	7.0	6	4.83	4.52	4.20	3.91	3.61
	10.1	9	4.80	4.49	4.18	3.88	3.58
	13.2	12	4.77	4.46	4.16	3.85	3.55
	16.9	15.5	4.73	4.43	4.12	3.82	3.51

Air flow	Ambient air temp. (°CDB)	Indoor air temperature 21 °CDB 14 °CWB TC	21 °CDB 14 °CWB SHC	23 °CDB 16 °CWB TC	23 °CDB 16 °CWB SHC	26 °CDB 18 °CWB TC	26 °CDB 18 °CWB SHC	27 °CDB 19 °CWB TC	27 °CDB 19 °CWB SHC	28 °CDB 20 °CWB TC	28 °CDB 20 °CWB SHC	31 °CDB 22 °CWB TC	31 °CDB 22 °CWB SHC	33 °CDB 24 °CWB TC	33 °CDB 24 °CWB SHC
	10			2.71	2.08	3.24	2.35	3.51	2.42	3.73	2.45	4.18	2.65	4.34	2.57
	12			2.71	2.08	3.24	2.35	3.51	2.42	3.73	2.45	4.17	2.64	4.32	2.56
	14			2.71	2.08	3.24	2.35	3.51	2.42	3.72	2.45	4.15	2.63	4.30	2.56
	16			2.71	2.08	3.24	2.35	3.51	2.42	3.72	2.45	4.14	2.63	4.29	2.55
	18			2.71	2.08	3.24	2.35	3.51	2.42	3.71	2.45	4.12	2.62	4.27	2.55
Lo	20			2.71	2.08	3.24	2.35	3.51	2.42	3.71	2.45	4.11	2.62	4.25	2.54
	22			2.71	2.08	3.24	2.35	3.51	2.42	3.69	2.44	4.05	2.59	4.19	2.52
7	24			2.71	2.08	3.24	2.35	3.51	2.42	3.67	2.43	4.00	2.57	4.13	2.49
(m³/min)	26			2.70	2.08	3.23	2.35	3.48	2.41	3.63	2.41	3.94	2.55	4.07	2.47
	28	2.45	2.05	2.70	2.08	3.21	2.34	3.44	2.39	3.59	2.39	3.88	2.53	4.01	2.45
	30	2.45	2.05	2.69	2.07	3.19	2.33	3.41	2.37	3.55	2.38	3.82	2.50	3.95	2.43
	32	2.45	2.05	2.69	2.07	3.16	2.32	3.38	2.36	3.50	2.36	3.76	2.48	3.89	2.41
	34	2.45	2.05	2.68	2.07	3.15	2.32	3.33	2.34	3.45	2.34	3.68	2.45	3.80	2.38
	35	2.45	2.05	2.67	2.06	3.14	2.31	3.31	2.35	3.42	2.32	3.64	2.43	3.76	2.36
	36	2.45	2.05	2.67	2.06	3.12	2.30	3.29	2.32	3.39	2.31	3.57	2.41	3.69	2.34
	38	2.45	2.05	2.66	2.06	3.07	2.28	3.26	2.31	3.32	2.28	3.44	2.35	3.55	2.29
	39	2.45	2.05	2.66	2.06	3.05	2.27	3.24	2.30	3.29	2.27	3.38	2.33	3.47	2.26
	41	2.45	2.05	2.65	2.05	2.96	2.23	3.11	2.24	3.15	2.21	3.23	2.27	3.31	2.20
	43	2.45	2.05	2.64	2.05	2.87	2.19	2.98	2.19	3.01	2.15	3.08	2.22	3.15	2.15

Air flow	Ambient air temp. DB	Ambient air temp. WB	Indoor air temp. 16 °CDB	18 °CDB	20 °CDB	22 °CDB	24 °CDB
	-19.8	-20	1.94	1.94	1.94	1.94	1.94
	-17.8	-18	2.07	2.07	2.07	2.07	2.07
	-15.7	-16	2.19	2.19	2.19	2.19	2.19
	-13.7	-14	2.32	2.32	2.32	2.32	2.32
	-11.7	-12	2.44	2.44	2.44	2.44	2.44
Lo	-9.6	-10	2.57	2.57	2.57	2.57	2.57
	-7.5	-8	2.72	2.72	2.72	2.72	2.72
7	-5.5	-6	2.88	2.88	2.88	2.88	2.88
(m³/min)	-3.4	-4	2.98	2.98	2.97	2.94	2.91
	-1.3	-2	3.08	3.07	3.07	3.01	2.95
	0.8	0	3.25	3.20	3.16	3.04	2.93
	3.9	3	3.53	3.40	3.27	3.09	2.91
	7.0	6	3.85	3.60	3.35	3.12	2.88
	10.1	9	3.83	3.58	3.34	3.10	2.86
	13.2	12	3.80	3.56	3.32	3.07	2.83
	16.9	15.5	3.77	3.53	3.29	3.04	2.80

Note(1) This data shows average statuses out of those possible to occur in the system control.
(Depending on controls, there may be ranges where the operation is not conducted continuously.)

(2) Symbols are as follows
TC :Total cooling capacity(kW)
SHC :Sensible heat capacity(kW)

Cool mode	Uhi	Hi	Me	Lo
Air flow	14.00	11	9	7
TC	4.74	4.50	3.96	3.31
SHF	0.82	0.75	0.73	0.71

Heat mode	Uhi	Hi	Me	Lo
Air flow	14	11	9	7
Heating capacity	5.39	5.00	4.20	3.35

Model **FDK56KXE6** Cool Mode

Air flow	Ambient air temp. (°CDB)	Indoor air temperature 21 °CDB 14 °CWB TC	21 °CDB 14 °CWB SHC	23 °CDB 16 °CWB TC	23 °CDB 16 °CWB SHC	26 °CDB 18 °CWB TC	26 °CDB 18 °CWB SHC	27 °CDB 19 °CWB TC	27 °CDB 19 °CWB SHC	28 °CDB 20 °CWB TC	28 °CDB 20 °CWB SHC	31 °CDB 22 °CWB TC	31 °CDB 22 °CWB SHC	33 °CDB 24 °CWB TC	33 °CDB 24 °CWB SHC
Uhi	10			4.76	3.84	5.69	4.34	6.16	4.45	6.55	4.51	7.34	4.86	7.62	4.74
	12			4.76	3.84	5.69	4.34	6.16	4.45	6.54	4.50	7.31	4.85	7.59	4.73
	14			4.76	3.84	5.69	4.34	6.16	4.45	6.53	4.50	7.29	4.84	7.56	4.71
	16			4.76	3.84	5.69	4.34	6.16	4.45	6.53	4.50	7.26	4.83	7.52	4.70
	18			4.76	3.84	5.69	4.34	6.16	4.45	6.52	4.49	7.23	4.82	7.49	4.69
	20			4.76	3.84	5.69	4.34	6.16	4.45	6.51	4.49	7.21	4.81	7.46	4.68
	22			4.76	3.84	5.69	4.34	6.16	4.45	6.48	4.48	7.12	4.78	7.35	4.64
14	24			4.75	3.84	5.69	4.34	6.16	4.45	6.45	4.47	7.02	4.74	7.25	4.61
(m³/min)	26			4.74	3.83	5.66	4.33	6.10	4.43	6.37	4.43	6.91	4.70	7.14	4.57
	28	4.30	3.79	4.74	3.83	5.64	4.32	6.04	4.39	6.30	4.41	6.80	4.66	7.03	4.53
	30	4.30	3.79	4.73	3.83	5.59	4.30	5.98	4.37	6.22	4.37	6.70	4.62	6.92	4.50
	32	4.30	3.79	4.72	3.82	5.55	4.29	5.93	4.35	6.15	4.34	6.60	4.58	6.82	4.46
	34	4.30	3.79	4.70	3.81	5.53	4.28	5.85	4.32	6.05	4.30	6.46	4.53	6.68	4.41
	35	4.30	3.79	4.69	3.81	5.52	4.27	5.81	4.36	6.00	4.28	6.39	4.50	6.61	4.38
	36	4.30	3.79	4.69	3.81	5.48	4.26	5.78	4.29	5.94	4.26	6.27	4.46	6.48	4.34
	38	4.30	3.79	4.68	3.80	5.39	4.22	5.72	4.26	5.83	4.21	6.04	4.37	6.22	4.25
	39	4.30	3.79	4.67	3.80	5.35	4.20	5.69	4.25	5.77	4.19	5.93	4.33	6.10	4.21
	41	4.30	3.79	4.65	3.79	5.19	4.13	5.46	4.16	5.53	4.10	5.66	4.24	5.81	4.12
	43	4.30	3.79	4.64	3.79	5.03	4.07	5.23	4.06	5.29	4.00	5.40	4.15	5.52	4.03

Heat Mode

Air flow	Ambient air temp. DB	Ambient air temp. WB	Indoor air temp. 16 °CDB	18 °CDB	20 °CDB	22 °CDB	24 °CDB
Uhi	-19.8	-20	3.86	3.86	3.86	3.86	3.86
	-17.8	-18	4.11	4.11	4.11	4.11	4.11
	-15.7	-16	4.36	4.36	4.36	4.36	4.36
	-13.7	-14	4.61	4.61	4.61	4.61	4.61
	-11.7	-12	4.86	4.86	4.86	4.86	4.86
	-9.6	-10	5.11	5.11	5.11	5.11	5.11
	-7.5	-8	5.42	5.42	5.42	5.42	5.42
14	-5.5	-6	5.73	5.73	5.73	5.73	5.73
(m³/min)	-3.4	-4	5.93	5.92	5.91	5.85	5.79
	-1.3	-2	6.13	6.11	6.09	5.98	5.86
	0.8	0	6.46	6.37	6.28	6.05	5.83
	3.9	3	7.01	6.76	6.51	6.14	5.78
	7.0	6	7.66	7.16	6.66	6.19	5.73
	10.1	9	7.61	7.12	6.64	6.16	5.68
	13.2	12	7.56	7.08	6.59	6.11	5.63
	16.9	15.5	7.50	7.02	6.54	6.05	5.57

Air flow	Ambient air temp. (°CDB)	Indoor air temperature 21 °CDB 14 °CWB TC	21 °CDB 14 °CWB SHC	23 °CDB 16 °CWB TC	23 °CDB 16 °CWB SHC	26 °CDB 18 °CWB TC	26 °CDB 18 °CWB SHC	27 °CDB 19 °CWB TC	27 °CDB 19 °CWB SHC	28 °CDB 20 °CWB TC	28 °CDB 20 °CWB SHC	31 °CDB 22 °CWB TC	31 °CDB 22 °CWB SHC	33 °CDB 24 °CWB TC	33 °CDB 24 °CWB SHC
Hi	10			4.59	3.77	5.49	4.26	5.94	4.35	6.32	4.41	7.07	4.76	7.35	4.64
	12			4.59	3.77	5.49	4.26	5.94	4.35	6.31	4.41	7.05	4.75	7.31	4.63
	14			4.59	3.77	5.49	4.26	5.94	4.35	6.30	4.41	7.02	4.74	7.28	4.62
	16			4.59	3.77	5.49	4.26	5.94	4.35	6.29	4.40	7.00	4.73	7.25	4.61
	18			4.59	3.77	5.49	4.26	5.94	4.35	6.28	4.40	6.97	4.72	7.22	4.60
	20			4.59	3.77	5.49	4.26	5.94	4.35	6.27	4.39	6.95	4.71	7.19	4.59
	22			4.58	3.76	5.49	4.26	5.94	4.35	6.24	4.38	6.86	4.68	7.09	4.55
14	24			4.58	3.76	5.48	4.26	5.94	4.35	6.21	4.37	6.77	4.65	6.99	4.52
(m³/min)	26			4.57	3.76	5.46	4.25	5.88	4.33	6.14	4.34	6.66	4.61	6.88	4.48
	28	4.14	3.71	4.57	3.76	5.43	4.23	5.82	4.30	6.07	4.31	6.56	4.57	6.78	4.45
	30	4.14	3.71	4.56	3.75	5.39	4.22	5.77	4.28	6.00	4.28	6.46	4.53	6.67	4.41
	32	4.14	3.71	4.55	3.75	5.35	4.20	5.71	4.26	5.93	4.25	6.36	4.49	6.57	4.37
	34	4.14	3.71	4.53	3.74	5.33	4.19	5.64	4.23	5.83	4.21	6.22	4.44	6.44	4.33
	35	4.14	3.71	4.52	3.73	5.32	4.19	5.60	4.20	5.79	4.20	6.16	4.42	6.37	4.30
	36	4.14	3.71	4.52	3.73	5.28	4.17	5.57	4.20	5.73	4.17	6.05	4.38	6.25	4.26
	38	4.14	3.71	4.51	3.73	5.20	4.14	5.52	4.18	5.62	4.13	5.82	4.29	6.00	4.18
	39	4.14	3.71	4.50	3.72	5.16	4.12	5.49	4.17	5.56	4.11	5.71	4.26	5.87	4.14
	41	4.14	3.71	4.49	3.72	5.00	4.06	5.26	4.08	5.33	4.02	5.46	4.17	5.60	4.05
	43	4.14	3.71	4.47	3.71	4.85	3.99	5.04	3.99	5.10	3.93	5.21	4.08	5.32	3.96

Air flow	Ambient air temp. DB	Ambient air temp. WB	Indoor air temp. 16 °CDB	18 °CDB	20 °CDB	22 °CDB	24 °CDB
Hi	-19.8	-20	3.65	3.65	3.65	3.65	3.65
	-17.8	-18	3.89	3.89	3.89	3.89	3.89
	-15.7	-16	4.12	4.12	4.12	4.12	4.12
	-13.7	-14	4.36	4.36	4.36	4.36	4.36
	-11.7	-12	4.59	4.59	4.59	4.59	4.59
	-9.6	-10	4.83	4.83	4.83	4.83	4.83
	-7.5	-8	5.12	5.12	5.12	5.12	5.12
14	-5.5	-6	5.42	5.42	5.42	5.42	5.42
(m³/min)	-3.4	-4	5.61	5.60	5.59	5.54	5.48
	-1.3	-2	5.80	5.78	5.76	5.65	5.54
	0.8	0	6.11	6.02	5.94	5.73	5.51
	3.9	3	6.63	6.39	6.16	5.81	5.47
	7.0	6	7.25	6.77	6.30	5.86	5.42
	10.1	9	7.20	6.74	6.28	5.82	5.37
	13.2	12	7.15	6.69	6.24	5.78	5.32
	16.9	15.5	7.10	6.64	6.18	5.73	5.27

Air flow	Ambient air temp. (°CDB)	Indoor air temperature 21 °CDB 14 °CWB TC	21 °CDB 14 °CWB SHC	23 °CDB 16 °CWB TC	23 °CDB 16 °CWB SHC	26 °CDB 18 °CWB TC	26 °CDB 18 °CWB SHC	27 °CDB 19 °CWB TC	27 °CDB 19 °CWB SHC	28 °CDB 20 °CWB TC	28 °CDB 20 °CWB SHC	31 °CDB 22 °CWB TC	31 °CDB 22 °CWB SHC	33 °CDB 24 °CWB TC	33 °CDB 24 °CWB SHC
Me	10			4.21	3.35	5.03	3.79	5.44	3.88	5.79	3.93	6.48	4.25	6.73	4.14
	12			4.21	3.35	5.03	3.79	5.44	3.88	5.78	3.93	6.46	4.24	6.70	4.12
	14			4.21	3.35	5.03	3.79	5.44	3.88	5.77	3.93	6.43	4.23	6.67	4.11
	16			4.21	3.35	5.03	3.79	5.44	3.88	5.76	3.92	6.41	4.22	6.64	4.10
	18			4.21	3.35	5.03	3.79	5.44	3.88	5.75	3.92	6.39	4.21	6.61	4.09
	20			4.21	3.35	5.03	3.79	5.44	3.88	5.75	3.92	6.36	4.20	6.58	4.08
	22			4.20	3.35	5.02	3.79	5.44	3.88	5.72	3.91	6.28	4.16	6.49	4.04
12	24			4.19	3.35	5.02	3.79	5.44	3.88	5.69	3.89	6.20	4.13	6.40	4.01
(m³/min)	26			4.19	3.35	5.00	3.78	5.39	3.86	5.63	3.87	6.10	4.09	6.31	3.98
	28	3.80	3.30	4.19	3.35	4.98	3.77	5.34	3.84	5.56	3.84	6.01	4.06	6.21	3.95
	30	3.80	3.30	4.18	3.34	4.94	3.75	5.28	3.81	5.49	3.81	5.92	4.03	6.11	3.91
	32	3.80	3.30	4.17	3.34	4.90	3.73	5.23	3.79	5.43	3.79	5.82	3.99	6.02	3.88
	34	3.80	3.30	4.15	3.33	4.88	3.73	5.16	3.76	5.34	3.75	5.70	3.94	5.90	3.84
	35	3.80	3.30	4.15	3.33	4.87	3.72	5.13	3.74	5.30	3.73	5.64	3.92	5.83	3.82
	36	3.80	3.30	4.14	3.32	4.84	3.71	5.10	3.73	5.25	3.71	5.54	3.89	5.72	3.78
	38	3.80	3.30	4.13	3.32	4.76	3.67	5.05	3.71	5.15	3.67	5.34	3.81	5.50	3.70
	39	3.80	3.30	4.12	3.31	4.73	3.66	5.03	3.71	5.10	3.65	5.23	3.77	5.38	3.66
	41	3.80	3.30	4.11	3.31	4.58	3.60	4.82	3.62	4.88	3.57	5.00	3.69	5.13	3.58
	43	3.80	3.30	4.10	3.31	4.44	3.54	4.62	3.54	4.67	3.48	4.77	3.60	4.88	3.50

Air flow	Ambient air temp. DB	Ambient air temp. WB	Indoor air temp. 16 °CDB	18 °CDB	20 °CDB	22 °CDB	24 °CDB
Me	-19.8	-20	3.21	3.21	3.21	3.21	3.21
	-17.8	-18	3.42	3.42	3.42	3.42	3.42
	-15.7	-16	3.63	3.63	3.63	3.63	3.63
	-13.7	-14	3.83	3.83	3.83	3.83	3.83
	-11.7	-12	4.04	4.04	4.04	4.04	4.04
	-9.6	-10	4.25	4.25	4.25	4.25	4.25
	-7.5	-8	4.51	4.51	4.51	4.51	4.51
12	-5.5	-6	4.76	4.76	4.76	4.76	4.76
(m³/min)	-3.4	-4	4.93	4.92	4.92	4.87	4.82
	-1.3	-2	5.10	5.08	5.07	4.97	4.88
	0.8	0	5.37	5.30	5.22	5.03	4.85
	3.9	3	5.83	5.62	5.42	5.11	4.81
	7.0	6	6.37	5.96	5.54	5.15	4.76
	10.1	9	6.33	5.92	5.52	5.12	4.72
	13.2	12	6.29	5.89	5.48	5.08	4.68
	16.9	15.5	6.24	5.84	5.44	5.03	4.63

Air flow	Ambient air temp. (°CDB)	Indoor air temperature 21 °CDB 14 °CWB TC	21 °CDB 14 °CWB SHC	23 °CDB 16 °CWB TC	23 °CDB 16 °CWB SHC	26 °CDB 18 °CWB TC	26 °CDB 18 °CWB SHC	27 °CDB 19 °CWB TC	27 °CDB 19 °CWB SHC	28 °CDB 20 °CWB TC	28 °CDB 20 °CWB SHC	31 °CDB 22 °CWB TC	31 °CDB 22 °CWB SHC	33 °CDB 24 °CWB TC	33 °CDB 24 °CWB SHC
Lo	10			3.75	2.92	4.49	3.30	4.85	3.38	5.17	3.44	5.79	3.71	6.01	3.60
	12			3.75	2.92	4.49	3.30	4.85	3.38	5.16	3.43	5.76	3.69	5.98	3.59
	14			3.75	2.92	4.49	3.30	4.85	3.38	5.15	3.43	5.74	3.69	5.96	3.59
	16			3.75	2.92	4.49	3.30	4.85	3.38	5.14	3.43	5.72	3.68	5.93	3.58
	18			3.75	2.92	4.49	3.30	4.85	3.38	5.14	3.43	5.70	3.67	5.90	3.56
	20			3.75	2.92	4.49	3.30	4.85	3.38	5.13	3.42	5.68	3.66	5.88	3.56
	22			3.75	2.92	4.49	3.30	4.85	3.38	5.11	3.41	5.61	3.63	5.80	3.53
10	24			3.74	2.91	4.48	3.30	4.85	3.38	5.08	3.40	5.54	3.61	5.72	3.50
(m³/min)	26			3.74	2.91	4.46	3.29	4.81	3.36	5.02	3.38	5.45	3.57	5.63	3.47
	28	3.39	2.87	3.74	2.91	4.44	3.28	4.76	3.34	4.96	3.35	5.36	3.54	5.54	3.43
	30	3.39	2.87	3.73	2.91	4.41	3.27	4.72	3.33	4.91	3.33	5.28	3.51	5.46	3.41
	32	3.39	2.87	3.72	2.90	4.37	3.25	4.67	3.30	4.85	3.30	5.20	3.47	5.38	3.38
	34	3.39	2.87	3.71	2.90	4.36	3.25	4.61	3.28	4.77	3.27	5.09	3.43	5.26	3.34
	35	3.39	2.87	3.70	2.89	4.35	3.24	4.58	3.30	4.73	3.25	5.03	3.41	5.21	3.32
	36	3.39	2.87	3.70	2.89	4.32	3.23	4.56	3.26	4.69	3.23	4.94	3.37	5.11	3.28
	38	3.39	2.87	3.69	2.89	4.25	3.20	4.51	3.24	4.60	3.20	4.76	3.30	4.91	3.21
	39	3.39	2.87	3.68	2.88	4.22	3.18	4.49	3.23	4.55	3.18	4.67	3.27	4.80	3.17
	41	3.39	2.87	3.67	2.88	4.09	3.13	4.31	3.15	4.36	3.10	4.47	3.20	4.58	3.10
	43	3.39	2.87	3.66	2.88	3.97	3.08	4.12	3.07	4.17	3.03	4.26	3.12	4.35	3.02

Air flow	Ambient air temp. DB	Ambient air temp. WB	Indoor air temp. 16 °CDB	18 °CDB	20 °CDB	22 °CDB	24 °CDB
Lo	-19.8	-20	2.75	2.75	2.75	2.75	2.75
	-17.8	-18	2.93	2.93	2.93	2.93	2.93
	-15.7	-16	3.10	3.10	3.10	3.10	3.10
	-13.7	-14	3.28	3.28	3.28	3.28	3.28
	-11.7	-12	3.46	3.46	3.46	3.46	3.46
	-9.6	-10	3.63	3.63	3.63	3.63	3.63
	-7.5	-8	3.86	3.86	3.86	3.86	3.86
10	-5.5	-6	4.08	4.08	4.08	4.08	4.08
(m³/min)	-3.4	-4	4.22	4.21	4.21	4.17	4.12
	-1.3	-2	4.36	4.35	4.34	4.25	4.17
	0.8	0	4.60	4.53	4.47	4.31	4.15
	3.9	3	4.99	4.81	4.63	4.37	4.11
	7.0	6	5.45	5.10	4.74	4.41	4.08
	10.1	9	5.42	5.07	4.72	4.38	4.04
	13.2	12	5.38	5.04	4.69	4.35	4.01
	16.9	15.5	5.34	4.99	4.65	4.31	3.96

Note(1) This data shows average statuses out of those possible to occur in the system control.
(Depending on controls, there may be ranges where the operation is not conducted continuously.)
(2) Symbols are as follows
TC :Total cooling capacity(kW)
SHC :Sensible heat capacity(kW)

Cool mode	Uhi	Hi	Me	Lo
Air flow	14.00	14	12	10
TC	5.81	5.60	5.13	4.58
SHF	0.75	0.75	0.73	0.72

Heat mode	Uhi	Hi	Me	Lo
Air flow	14	14	12	10
Heating capacity	6.66	6.30	5.54	4.74

Model **FDK71KXE6** Cool Mode

Air flow	Ambient air temp. (°CDB)	Indoor air temperature 21 °CDB 14 °CWB TC	21 °CDB 14 °CWB SHC	23 °CDB 16 °CWB TC	23 °CDB 16 °CWB SHC	26 °CDB 18 °CWB TC	26 °CDB 18 °CWB SHC	27 °CDB 19 °CWB TC	27 °CDB 19 °CWB SHC	28 °CDB 20 °CWB TC	28 °CDB 20 °CWB SHC	31 °CDB 22 °CWB TC	31 °CDB 22 °CWB SHC	33 °CDB 24 °CWB TC	33 °CDB 24 °CWB SHC
Uhi	10			6.07	5.25	7.26	5.95	7.85	6.07	8.36	6.14	9.36	6.64	9.72	6.49
	12			6.07	5.25	7.26	5.95	7.85	6.07	8.35	6.14	9.33	6.63	9.68	6.47
	14			6.07	5.25	7.26	5.95	7.85	6.07	8.33	6.13	9.29	6.62	9.64	6.45
	16			6.07	5.25	7.26	5.95	7.85	6.07	8.32	6.12	9.26	6.61	9.59	6.43
	18			6.07	5.25	7.26	5.95	7.85	6.07	8.31	6.12	9.23	6.59	9.55	6.42
	20			6.07	5.25	7.26	5.95	7.85	6.07	8.30	6.12	9.19	6.57	9.51	6.41
	22			6.07	5.25	7.26	5.95	7.85	6.07	8.26	6.10	9.08	6.53	9.38	6.36
21	24			6.06	5.25	7.26	5.95	7.85	6.07	8.22	6.09	8.96	6.49	9.25	6.32
(m³/min)	26			6.05	5.24	7.22	5.93	7.78	6.04	8.13	6.05	8.82	6.44	9.11	6.28
	28	5.48	5.19	6.05	5.24	7.19	5.92	7.71	6.02	8.03	6.01	8.68	6.39	8.97	6.23
	30	5.48	5.19	6.03	5.23	7.13	5.89	7.63	5.98	7.94	5.98	8.54	6.34	8.83	6.19
	32	5.48	5.19	6.02	5.23	7.08	5.87	7.56	5.96	7.84	5.94	8.41	6.30	8.70	6.14
	34	5.48	5.19	6.00	5.22	7.05	5.86	7.46	5.91	7.72	5.90	8.23	6.23	8.52	6.09
	35	5.48	5.19	5.99	5.22	7.04	5.86	7.41	6.00	7.66	5.86	8.15	6.21	8.43	6.06
	36	5.48	5.19	5.98	5.21	6.99	5.84	7.37	5.87	7.58	5.83	8.00	6.15	8.26	5.99
	38	5.48	5.19	5.97	5.21	6.88	5.79	7.30	5.84	7.43	5.78	7.71	6.04	7.94	5.89
	39	5.48	5.19	5.96	5.20	6.83	5.77	7.26	5.83	7.36	5.75	7.56	5.99	7.77	5.84
	41	5.48	5.19	5.94	5.20	6.62	5.69	6.97	5.72	7.05	5.64	7.22	5.88	7.41	5.73
	43	5.48	5.19	5.92	5.19	6.42	5.61	6.67	5.60	6.74	5.52	6.89	5.77	7.04	5.61

Heat Mode

Air flow	Ambient air temp. DB	Ambient air temp. WB	Indoor air temp. 16 °CDB	18 °CDB	20 °CDB	22 °CDB	24 °CDB
Uhi	-19.8	-20	4.92	4.92	4.92	4.92	4.92
	-17.8	-18	5.23	5.23	5.23	5.23	5.23
	-15.7	-16	5.55	5.55	5.55	5.55	5.55
	-13.7	-14	5.87	5.87	5.87	5.87	5.87
	-11.7	-12	6.18	6.18	6.18	6.18	6.18
	-9.6	-10	6.50	6.50	6.50	6.50	6.50
	-7.5	-8	6.90	6.90	6.90	6.90	6.90
21	-5.5	-6	7.29	7.29	7.29	7.29	7.29
(m³/min)	-3.4	-4	7.55	7.54	7.53	7.45	7.38
	-1.3	-2	7.80	7.78	7.76	7.61	7.46
	0.8	0	8.23	8.11	7.99	7.71	7.42
	3.9	3	8.93	8.61	8.29	7.82	7.36
	7.0	6	9.75	9.12	8.48	7.89	7.29
	10.1	9	9.69	9.07	8.45	7.84	7.23
	13.2	12	9.62	9.01	8.40	7.78	7.17
	16.9	15.5	9.55	8.94	8.32	7.71	7.09

Air flow	Ambient air temp. (°CDB)	Indoor air temperature 21 °CDB 14 °CWB TC	21 °CDB 14 °CWB SHC	23 °CDB 16 °CWB TC	23 °CDB 16 °CWB SHC	26 °CDB 18 °CWB TC	26 °CDB 18 °CWB SHC	27 °CDB 19 °CWB TC	27 °CDB 19 °CWB SHC	28 °CDB 20 °CWB TC	28 °CDB 20 °CWB SHC	31 °CDB 22 °CWB TC	31 °CDB 22 °CWB SHC	33 °CDB 24 °CWB TC	33 °CDB 24 °CWB SHC
Hi	10			5.82	5.14	6.96	5.83	7.53	5.94	8.01	6.01	8.97	6.49	9.31	6.34
	12			5.82	5.14	6.96	5.83	7.53	5.94	8.00	6.00	8.94	6.48	9.27	6.33
	14			5.82	5.14	6.96	5.83	7.53	5.94	7.99	6.00	8.90	6.47	9.23	6.32
	16			5.82	5.14	6.96	5.83	7.53	5.94	7.97	5.99	8.87	6.46	9.19	6.30
	18			5.82	5.14	6.96	5.83	7.53	5.94	7.96	5.99	8.84	6.45	9.15	6.29
	20			5.82	5.14	6.96	5.83	7.53	5.94	7.95	5.98	8.81	6.44	9.11	6.28
	22			5.81	5.14	6.95	5.82	7.53	5.94	7.92	5.97	8.70	6.40	8.99	6.24
21	24			5.80	5.14	6.95	5.82	7.53	5.94	7.88	5.96	8.58	6.35	8.86	6.20
(m³/min)	26			5.80	5.14	6.92	5.81	7.46	5.91	7.79	5.92	8.45	6.31	8.73	6.15
	28	5.25	5.04	5.79	5.13	6.89	5.80	7.38	5.88	7.69	5.89	8.31	6.26	8.59	6.11
	30	5.25	5.04	5.78	5.13	6.83	5.77	7.31	5.85	7.60	5.84	8.19	6.22	8.46	6.07
	32	5.25	5.04	5.77	5.12	6.78	5.75	7.24	5.82	7.51	5.81	8.06	6.17	8.33	6.03
	34	5.25	5.04	5.75	5.12	6.76	5.75	7.15	5.79	7.39	5.76	7.89	6.10	8.16	5.96
	35	5.25	5.04	5.74	5.11	6.75	5.74	7.10	5.75	7.33	5.74	7.80	6.07	8.08	5.94
	36	5.25	5.04	5.73	5.11	6.69	5.72	7.06	5.75	7.26	5.71	7.66	6.03	7.92	5.89
	38	5.25	5.04	5.72	5.10	6.59	5.68	6.99	5.72	7.12	5.66	7.38	5.93	7.61	5.79
	39	5.25	5.04	5.71	5.10	6.54	5.66	6.96	5.71	7.05	5.64	7.24	5.88	7.45	5.74
	41	5.25	5.04	5.69	5.09	6.35	5.58	6.67	5.60	6.76	5.53	6.92	5.78	7.10	5.63
	43	5.25	5.04	5.67	5.08	6.15	5.50	6.39	5.50	6.46	5.42	6.60	5.67	6.75	5.53

Air flow	Ambient air temp. DB	Ambient air temp. WB	Indoor air temp. 16 °CDB	18 °CDB	20 °CDB	22 °CDB	24 °CDB
Hi	-19.8	-20	4.64	4.64	4.64	4.64	4.64
	-17.8	-18	4.94	4.94	4.94	4.94	4.94
	-15.7	-16	5.24	5.24	5.24	5.24	5.24
	-13.7	-14	5.54	5.54	5.54	5.54	5.54
	-11.7	-12	5.83	5.83	5.83	5.83	5.83
	-9.6	-10	6.13	6.13	6.13	6.13	6.13
	-7.5	-8	6.51	6.51	6.51	6.51	6.51
21	-5.5	-6	6.88	6.88	6.88	6.88	6.88
(m³/min)	-3.4	-4	7.12	7.11	7.10	7.03	6.96
	-1.3	-2	7.36	7.34	7.32	7.18	7.04
	0.8	0	7.76	7.65	7.54	7.27	7.00
	3.9	3	8.42	8.12	7.82	7.38	6.94
	7.0	6	9.20	8.60	8.00	7.44	6.88
	10.1	9	9.14	8.56	7.97	7.40	6.82
	13.2	12	9.08	8.50	7.92	7.34	6.76
	16.9	15.5	9.01	8.43	7.85	7.27	6.69

Air flow	Ambient air temp. (°CDB)	Indoor air temperature 21 °CDB 14 °CWB TC	21 °CDB 14 °CWB SHC	23 °CDB 16 °CWB TC	23 °CDB 16 °CWB SHC	26 °CDB 18 °CWB TC	26 °CDB 18 °CWB SHC	27 °CDB 19 °CWB TC	27 °CDB 19 °CWB SHC	28 °CDB 20 °CWB TC	28 °CDB 20 °CWB SHC	31 °CDB 22 °CWB TC	31 °CDB 22 °CWB SHC	33 °CDB 24 °CWB TC	33 °CDB 24 °CWB SHC
Me	10			5.39	4.58	6.45	5.20	6.97	5.30	7.42	5.36	8.31	5.80	8.63	5.66
	12			5.39	4.58	6.45	5.20	6.97	5.30	7.41	5.36	8.28	5.79	8.59	5.65
	14			5.39	4.58	6.45	5.20	6.97	5.30	7.40	5.35	8.25	5.78	8.56	5.63
	16			5.39	4.58	6.45	5.20	6.97	5.30	7.39	5.35	8.22	5.77	8.52	5.62
	18			5.39	4.58	6.45	5.20	6.97	5.30	7.38	5.35	8.19	5.75	8.48	5.61
	20			5.39	4.58	6.45	5.20	6.97	5.30	7.37	5.34	8.16	5.74	8.44	5.60
	22			5.39	4.58	6.45	5.20	6.97	5.30	7.34	5.33	8.06	5.71	8.33	5.56
18	24			5.38	4.58	6.44	5.19	6.97	5.30	7.30	5.31	7.96	5.67	8.21	5.51
(m³/min)	26			5.37	4.57	6.41	5.18	6.91	5.28	7.22	5.28	7.83	5.62	8.09	5.47
	28	4.87	4.53	5.37	4.57	6.38	5.17	6.84	5.25	7.13	5.25	7.70	5.57	7.96	5.43
	30	4.87	4.53	5.36	4.57	6.33	5.14	6.78	5.22	7.05	5.22	7.59	5.53	7.84	5.39
	32	4.87	4.53	5.34	4.56	6.28	5.12	6.71	5.20	6.96	5.18	7.47	5.49	7.72	5.35
	34	4.87	4.53	5.33	4.56	6.26	5.11	6.62	5.16	6.85	5.14	7.31	5.43	7.56	5.30
	35	4.87	4.53	5.32	4.55	6.25	5.11	6.58	5.13	6.80	5.12	7.23	5.40	7.48	5.27
	36	4.87	4.53	5.31	4.55	6.20	5.09	6.55	5.13	6.73	5.10	7.10	5.36	7.34	5.23
	38	4.87	4.53	5.30	4.54	6.11	5.05	6.48	5.11	6.60	5.05	6.84	5.27	7.05	5.13
	39	4.87	4.53	5.29	4.54	6.06	5.03	6.45	5.08	6.54	5.02	6.71	5.21	6.90	5.08
	41	4.87	4.53	5.27	4.53	5.88	4.96	6.19	4.98	6.26	4.91	6.42	5.11	6.58	4.98
	43	4.87	4.53	5.25	4.52	5.70	4.89	5.92	4.88	5.99	4.81	6.12	5.01	6.26	4.88

Air flow	Ambient air temp. DB	Ambient air temp. WB	Indoor air temp. 16 °CDB	18 °CDB	20 °CDB	22 °CDB	24 °CDB
Me	-19.8	-20	4.19	4.19	4.19	4.19	4.19
	-17.8	-18	4.46	4.46	4.46	4.46	4.46
	-15.7	-16	4.73	4.73	4.73	4.73	4.73
	-13.7	-14	5.00	5.00	5.00	5.00	5.00
	-11.7	-12	5.27	5.27	5.27	5.27	5.27
	-9.6	-10	5.54	5.54	5.54	5.54	5.54
	-7.5	-8	5.87	5.87	5.87	5.87	5.87
18	-5.5	-6	6.21	6.21	6.21	6.21	6.21
(m³/min)	-3.4	-4	6.43	6.42	6.41	6.34	6.28
	-1.3	-2	6.64	6.62	6.61	6.48	6.35
	0.8	0	7.00	6.90	6.80	6.56	6.32
	3.9	3	7.60	7.33	7.06	6.66	6.26
	7.0	6	8.30	7.76	7.22	6.71	6.21
	10.1	9	8.25	7.72	7.19	6.67	6.16
	13.2	12	8.19	7.67	7.15	6.62	6.10
	16.9	15.5	8.13	7.61	7.08	6.56	6.04

Air flow	Ambient air temp. (°CDB)	Indoor air temperature 21 °CDB 14 °CWB TC	21 °CDB 14 °CWB SHC	23 °CDB 16 °CWB TC	23 °CDB 16 °CWB SHC	26 °CDB 18 °CWB TC	26 °CDB 18 °CWB SHC	27 °CDB 19 °CWB TC	27 °CDB 19 °CWB SHC	28 °CDB 20 °CWB TC	28 °CDB 20 °CWB SHC	31 °CDB 22 °CWB TC	31 °CDB 22 °CWB SHC	33 °CDB 24 °CWB TC	33 °CDB 24 °CWB SHC
Lo	10			4.88	4.04	5.83	4.56	6.31	4.66	6.71	4.72	7.52	5.10	7.80	4.97
	12			4.88	4.04	5.83	4.56	6.31	4.66	6.70	4.72	7.49	5.09	7.77	4.96
	14			4.88	4.04	5.83	4.56	6.31	4.66	6.69	4.71	7.46	5.07	7.74	4.94
	16			4.88	4.04	5.83	4.56	6.31	4.66	6.68	4.71	7.43	5.06	7.70	4.93
	18			4.88	4.04	5.83	4.56	6.31	4.66	6.67	4.70	7.41	5.06	7.67	4.92
	20			4.88	4.04	5.83	4.56	6.31	4.66	6.66	4.70	7.38	5.04	7.64	4.91
	22			4.87	4.04	5.83	4.56	6.31	4.66	6.63	4.69	7.29	5.01	7.53	4.87
15	24			4.86	4.03	5.83	4.56	6.31	4.66	6.60	4.68	7.19	4.97	7.43	4.84
(m³/min)	26			4.86	4.03	5.80	4.55	6.25	4.64	6.53	4.65	7.08	4.93	7.31	4.80
	28	4.40	3.98	4.86	4.03	5.77	4.54	6.19	4.61	6.45	4.62	6.97	4.89	7.20	4.76
	30	4.40	3.98	4.84	4.02	5.73	4.52	6.13	4.59	6.37	4.58	6.86	4.85	7.09	4.72
	32	4.40	3.98	4.83	4.02	5.68	4.50	6.07	4.56	6.30	4.56	6.75	4.81	6.98	4.69
	34	4.40	3.98	4.82	4.02	5.66	4.49	5.99	4.53	6.20	4.52	6.61	4.76	6.84	4.64
	35	4.40	3.98	4.81	4.01	5.65	4.49	5.95	4.52	6.15	4.50	6.54	4.73	6.77	4.62
	36	4.40	3.98	4.80	4.01	5.61	4.47	5.92	4.50	6.09	4.47	6.42	4.69	6.64	4.57
	38	4.40	3.98	4.79	4.00	5.52	4.43	5.86	4.48	5.97	4.43	6.19	4.61	6.37	4.49
	39	4.40	3.98	4.78	3.99	5.48	4.42	5.83	4.47	5.91	4.40	6.07	4.57	6.24	4.44
	41	4.40	3.98	4.77	3.99	5.32	4.35	5.59	4.37	5.66	4.31	5.80	4.47	5.95	4.35
	43	4.40	3.98	4.75	3.98	5.15	4.28	5.36	4.28	5.41	4.21	5.53	4.38	5.66	4.26

Air flow	Ambient air temp. DB	Ambient air temp. WB	Indoor air temp. 16 °CDB	18 °CDB	20 °CDB	22 °CDB	24 °CDB
Lo	-19.8	-20	3.69	3.69	3.69	3.69	3.69
	-17.8	-18	3.93	3.93	3.93	3.93	3.93
	-15.7	-16	4.16	4.16	4.16	4.16	4.16
	-13.7	-14	4.40	4.40	4.40	4.40	4.40
	-11.7	-12	4.64	4.64	4.64	4.64	4.64
	-9.6	-10	4.88	4.88	4.88	4.88	4.88
	-7.5	-8	5.17	5.17	5.17	5.17	5.17
15	-5.5	-6	5.47	5.47	5.47	5.47	5.47
(m³/min)	-3.4	-4	5.66	5.65	5.64	5.59	5.53
	-1.3	-2	5.85	5.84	5.82	5.71	5.60
	0.8	0	6.17	6.08	5.99	5.78	5.57
	3.9	3	6.69	6.46	6.22	5.87	5.52
	7.0	6	7.31	6.84	6.36	5.91	5.47
	10.1	9	7.27	6.80	6.34	5.88	5.42
	13.2	12	7.22	6.76	6.30	5.84	5.37
	16.9	15.5	7.16	6.70	6.24	5.78	5.32

Note(1) This data shows average statuses out of those possible to occur in the system control.
(Depending on controls, there may be ranges where the operation is not conducted continuously.)

(2) Symbols are as follows
TC :Total cooling capacity(kW)
SHC :Sensible heat capacity(kW)

Cool mode	Uhi	Hi	Me	Lo
Air flow	21.00	21	18	15
TC	7.41	7.10	6.58	5.95
SHF	0.81	0.81	0.78	0.76

Heat mode	Uhi	Hi	Me	Lo
Air flow	21	21	18	15
Heating capacity	8.48	8.00	7.22	6.36

Model **FDFL28KXE6** Cool Mode

Air flow	Ambient air temp. (°CDB)	Indoor air temperature 21 °CDB 14 °CWB TC	21 °CDB 14 °CWB SHC	23 °CDB 16 °CWB TC	23 °CDB 16 °CWB SHC	26 °CDB 18 °CWB TC	26 °CDB 18 °CWB SHC	27 °CDB 19 °CWB TC	27 °CDB 19 °CWB SHC	28 °CDB 20 °CWB TC	28 °CDB 20 °CWB SHC	31 °CDB 22 °CWB TC	31 °CDB 22 °CWB SHC	33 °CDB 24 °CWB TC	33 °CDB 24 °CWB SHC
Uhi	10			2.30	2.21	2.74	2.63	2.97	2.75	3.16	2.77	3.54	3.02	3.67	2.96
	12			2.30	2.21	2.74	2.63	2.97	2.75	3.15	2.77	3.52	3.01	3.66	2.95
	14			2.30	2.21	2.74	2.63	2.97	2.75	3.15	2.77	3.51	3.01	3.64	2.95
	16			2.30	2.21	2.74	2.63	2.97	2.75	3.14	2.77	3.50	3.00	3.63	2.95
	18			2.30	2.21	2.74	2.63	2.97	2.75	3.14	2.77	3.49	3.00	3.61	2.94
	20			2.30	2.21	2.74	2.63	2.97	2.75	3.14	2.77	3.47	2.99	3.59	2.93
	22			2.29	2.20	2.74	2.63	2.97	2.75	3.12	2.76	3.43	2.98	3.54	2.92
12	24			2.29	2.20	2.74	2.63	2.97	2.75	3.11	2.76	3.39	2.97	3.50	2.91
(m^3/min)	26			2.29	2.20	2.73	2.62	2.94	2.74	3.07	2.74	3.33	2.95	3.44	2.88
	28	2.07	1.99	2.28	2.19	2.72	2.61	2.91	2.73	3.03	2.73	3.28	2.93	3.39	2.87
	30	2.07	1.99	2.28	2.19	2.70	2.59	2.88	2.72	3.00	2.72	3.23	2.91	3.34	2.85
	32	2.07	1.99	2.27	2.18	2.67	2.56	2.86	2.72	2.96	2.71	3.18	2.90	3.29	2.84
	34	2.07	1.99	2.27	2.18	2.66	2.55	2.82	2.70	2.92	2.69	3.11	2.88	3.22	2.82
	35	2.07	1.99	2.26	2.17	2.66	2.55	2.80	2.69	2.89	2.68	3.08	2.87	3.18	2.81
	36	2.07	1.99	2.26	2.17	2.64	2.53	2.79	2.68	2.86	2.67	3.02	2.85	3.12	2.79
	38	2.07	1.99	2.25	2.16	2.60	2.50	2.76	2.65	2.81	2.65	2.91	2.79	3.00	2.75
	39	2.07	1.99	2.25	2.16	2.58	2.48	2.74	2.63	2.78	2.64	2.86	2.75	2.94	2.73
	41	2.07	1.99	2.24	2.15	2.50	2.40	2.63	2.52	2.66	2.55	2.73	2.62	2.80	2.69
	43	2.07	1.99	2.24	2.15	2.43	2.33	2.52	2.42	2.55	2.45	2.60	2.50	2.66	2.55

Heat Mode

Air flow	Ambient air temp. DB	Ambient air temp. WB	Indoor air temp. 16 °CDB	18 °CDB	20 °CDB	22 °CDB	24 °CDB
Uhi	-19.8	-20	1.86	1.86	1.86	1.86	1.86
	-17.8	-18	1.98	1.98	1.98	1.98	1.98
	-15.7	-16	2.09	2.09	2.09	2.09	2.09
	-13.7	-14	2.21	2.21	2.21	2.21	2.21
	-11.7	-12	2.33	2.33	2.33	2.33	2.33
	-9.6	-10	2.45	2.45	2.45	2.45	2.45
	-7.5	-8	2.60	2.60	2.60	2.60	2.60
12	-5.5	-6	2.75	2.75	2.75	2.75	2.75
(m^3/min)	-3.4	-4	2.85	2.84	2.84	2.81	2.78
	-1.3	-2	2.94	2.94	2.93	2.87	2.82
	0.8	0	3.10	3.06	3.02	2.91	2.80
	3.9	3	3.37	3.25	3.13	2.95	2.78
	7.0	6	3.68	3.44	3.20	2.98	2.75
	10.1	9	3.66	3.42	3.19	2.96	2.73
	13.2	12	3.63	3.40	3.17	2.94	2.70
	16.9	15.5	3.60	3.37	3.14	2.91	2.68

Air flow	Ambient air temp. (°CDB)	Indoor air temperature 21 °CDB 14 °CWB TC	21 °CDB 14 °CWB SHC	23 °CDB 16 °CWB TC	23 °CDB 16 °CWB SHC	26 °CDB 18 °CWB TC	26 °CDB 18 °CWB SHC	27 °CDB 19 °CWB TC	27 °CDB 19 °CWB SHC	28 °CDB 20 °CWB TC	28 °CDB 20 °CWB SHC	31 °CDB 22 °CWB TC	31 °CDB 22 °CWB SHC	33 °CDB 24 °CWB TC	33 °CDB 24 °CWB SHC
Hi	10			2.30	2.21	2.74	2.63	2.97	2.75	3.16	2.77	3.54	3.02	3.67	2.96
	12			2.30	2.21	2.74	2.63	2.97	2.75	3.15	2.77	3.52	3.01	3.66	2.95
	14			2.30	2.21	2.74	2.63	2.97	2.75	3.15	2.77	3.51	3.01	3.64	2.95
	16			2.30	2.21	2.74	2.63	2.97	2.75	3.14	2.77	3.50	3.00	3.63	2.95
	18			2.30	2.21	2.74	2.63	2.97	2.75	3.14	2.77	3.49	3.00	3.61	2.94
	20			2.30	2.21	2.74	2.63	2.97	2.75	3.14	2.77	3.47	2.99	3.59	2.93
	22			2.29	2.20	2.74	2.63	2.97	2.75	3.12	2.76	3.43	2.98	3.54	2.92
12	24			2.29	2.20	2.74	2.63	2.97	2.75	3.11	2.76	3.39	2.97	3.50	2.91
(m^3/min)	26			2.29	2.20	2.73	2.62	2.94	2.74	3.07	2.74	3.33	2.95	3.44	2.88
	28	2.07	1.99	2.28	2.19	2.72	2.61	2.91	2.73	3.03	2.73	3.28	2.93	3.39	2.87
	30	2.07	1.99	2.28	2.19	2.70	2.59	2.88	2.72	3.00	2.72	3.23	2.91	3.34	2.85
	32	2.07	1.99	2.27	2.18	2.67	2.56	2.86	2.72	2.96	2.71	3.18	2.90	3.29	2.84
	34	2.07	1.99	2.27	2.18	2.66	2.55	2.82	2.70	2.92	2.69	3.11	2.88	3.22	2.82
	35	2.07	1.99	2.26	2.17	2.66	2.55	2.80	2.69	2.89	2.68	3.08	2.87	3.18	2.81
	36	2.07	1.99	2.26	2.17	2.64	2.53	2.79	2.68	2.86	2.67	3.02	2.85	3.12	2.79
	38	2.07	1.99	2.25	2.16	2.60	2.50	2.76	2.65	2.81	2.65	2.91	2.79	3.00	2.75
	39	2.07	1.99	2.25	2.16	2.58	2.48	2.74	2.63	2.78	2.64	2.86	2.75	2.94	2.73
	41	2.07	1.99	2.24	2.15	2.50	2.40	2.63	2.52	2.66	2.55	2.73	2.62	2.80	2.69
	43	2.07	1.99	2.24	2.15	2.43	2.33	2.52	2.42	2.55	2.45	2.60	2.50	2.66	2.55

Air flow	Ambient air temp. DB	Ambient air temp. WB	Indoor air temp. 16 °CDB	18 °CDB	20 °CDB	22 °CDB	24 °CDB
Hi	-19.8	-20	1.86	1.86	1.86	1.86	1.86
	-17.8	-18	1.98	1.98	1.98	1.98	1.98
	-15.7	-16	2.09	2.09	2.09	2.09	2.09
	-13.7	-14	2.21	2.21	2.21	2.21	2.21
	-11.7	-12	2.33	2.33	2.33	2.33	2.33
	-9.6	-10	2.45	2.45	2.45	2.45	2.45
	-7.5	-8	2.60	2.60	2.60	2.60	2.60
12	-5.5	-6	2.75	2.75	2.75	2.75	2.75
(m^3/min)	-3.4	-4	2.85	2.84	2.84	2.81	2.78
	-1.3	-2	2.94	2.94	2.93	2.87	2.82
	0.8	0	3.10	3.06	3.02	2.91	2.80
	3.9	3	3.37	3.25	3.13	2.95	2.78
	7.0	6	3.68	3.44	3.20	2.98	2.75
	10.1	9	3.66	3.42	3.19	2.96	2.73
	13.2	12	3.63	3.40	3.17	2.94	2.70
	16.9	15.5	3.60	3.37	3.14	2.91	2.68

Air flow	Ambient air temp. (°CDB)	Indoor air temperature 21 °CDB 14 °CWB TC	21 °CDB 14 °CWB SHC	23 °CDB 16 °CWB TC	23 °CDB 16 °CWB SHC	26 °CDB 18 °CWB TC	26 °CDB 18 °CWB SHC	27 °CDB 19 °CWB TC	27 °CDB 19 °CWB SHC	28 °CDB 20 °CWB TC	28 °CDB 20 °CWB SHC	31 °CDB 22 °CWB TC	31 °CDB 22 °CWB SHC	33 °CDB 24 °CWB TC	33 °CDB 24 °CWB SHC
Me	10			2.17	2.08	2.60	2.50	2.81	2.56	2.99	2.58	3.35	2.81	3.48	2.74
	12			2.17	2.08	2.60	2.50	2.81	2.56	2.98	2.58	3.34	2.80	3.46	2.74
	14			2.17	2.08	2.60	2.50	2.81	2.56	2.98	2.58	3.32	2.79	3.45	2.74
	16			2.17	2.08	2.60	2.50	2.81	2.56	2.98	2.58	3.31	2.79	3.43	2.73
	18			2.17	2.08	2.60	2.50	2.81	2.56	2.97	2.57	3.30	2.78	3.42	2.73
	20			2.17	2.08	2.60	2.50	2.81	2.56	2.97	2.57	3.29	2.78	3.40	2.72
	22			2.17	2.08	2.60	2.50	2.81	2.56	2.95	2.57	3.25	2.77	3.35	2.71
11	24			2.17	2.08	2.59	2.49	2.81	2.56	2.94	2.56	3.20	2.75	3.31	2.69
(m^3/min)	26			2.16	2.07	2.58	2.48	2.78	2.55	2.91	2.55	3.15	2.74	3.26	2.68
	28	1.96	1.88	2.16	2.07	2.57	2.47	2.76	2.54	2.87	2.53	3.10	2.72	3.21	2.67
	30	1.96	1.88	2.16	2.07	2.55	2.45	2.73	2.53	2.84	2.52	3.06	2.71	3.16	2.65
	32	1.96	1.88	2.15	2.06	2.53	2.43	2.70	2.52	2.80	2.51	3.01	2.68	3.11	2.63
	34	1.96	1.88	2.14	2.05	2.52	2.42	2.67	2.51	2.76	2.50	2.94	2.66	3.05	2.61
	35	1.96	1.88	2.14	2.05	2.52	2.42	2.65	2.49	2.74	2.49	2.91	2.65	3.01	2.60
	36	1.96	1.88	2.14	2.05	2.50	2.40	2.64	2.50	2.71	2.48	2.86	2.64	2.96	2.59
	38	1.96	1.88	2.13	2.04	2.46	2.36	2.61	2.49	2.66	2.46	2.76	2.61	2.84	2.55
	39	1.96	1.88	2.13	2.04	2.44	2.34	2.60	2.48	2.63	2.45	2.70	2.59	2.78	2.53
	41	1.96	1.88	2.12	2.04	2.37	2.28	2.49	2.39	2.52	2.41	2.58	2.48	2.65	2.49
	43	1.96	1.88	2.12	2.04	2.30	2.21	2.39	2.29	2.41	2.31	2.46	2.36	2.52	2.42

Air flow	Ambient air temp. DB	Ambient air temp. WB	Indoor air temp. 16 °CDB	18 °CDB	20 °CDB	22 °CDB	24 °CDB
Me	-19.8	-20	1.76	1.76	1.76	1.76	1.76
	-17.8	-18	1.88	1.88	1.88	1.88	1.88
	-15.7	-16	1.99	1.99	1.99	1.99	1.99
	-13.7	-14	2.10	2.10	2.10	2.10	2.10
	-11.7	-12	2.22	2.22	2.22	2.22	2.22
	-9.6	-10	2.33	2.33	2.33	2.33	2.33
	-7.5	-8	2.47	2.47	2.47	2.47	2.47
11	-5.5	-6	2.61	2.61	2.61	2.61	2.61
(m^3/min)	-3.4	-4	2.71	2.70	2.70	2.67	2.64
	-1.3	-2	2.80	2.79	2.78	2.73	2.68
	0.8	0	2.95	2.91	2.87	2.76	2.66
	3.9	3	3.20	3.09	2.97	2.80	2.64
	7.0	6	3.50	3.27	3.04	2.83	2.61
	10.1	9	3.47	3.25	3.03	2.81	2.59
	13.2	12	3.45	3.23	3.01	2.79	2.57
	16.9	15.5	3.42	3.20	2.98	2.76	2.54

Air flow	Ambient air temp. (°CDB)	Indoor air temperature 21 °CDB 14 °CWB TC	21 °CDB 14 °CWB SHC	23 °CDB 16 °CWB TC	23 °CDB 16 °CWB SHC	26 °CDB 18 °CWB TC	26 °CDB 18 °CWB SHC	27 °CDB 19 °CWB TC	27 °CDB 19 °CWB SHC	28 °CDB 20 °CWB TC	28 °CDB 20 °CWB SHC	31 °CDB 22 °CWB TC	31 °CDB 22 °CWB SHC	33 °CDB 24 °CWB TC	33 °CDB 24 °CWB SHC
Lo	10			2.04	1.96	2.44	2.34	2.64	2.40	2.81	2.42	3.15	2.62	3.27	2.57
	12			2.04	1.96	2.44	2.34	2.64	2.40	2.80	2.42	3.13	2.62	3.25	2.56
	14			2.04	1.96	2.44	2.34	2.64	2.40	2.80	2.42	3.12	2.61	3.24	2.56
	16			2.04	1.96	2.44	2.34	2.64	2.40	2.80	2.42	3.11	2.61	3.22	2.55
	18			2.04	1.96	2.44	2.34	2.64	2.40	2.79	2.41	3.10	2.60	3.21	2.55
	20			2.04	1.96	2.44	2.34	2.64	2.40	2.79	2.41	3.09	2.60	3.20	2.55
	22			2.04	1.96	2.44	2.34	2.64	2.40	2.78	2.41	3.05	2.59	3.15	2.53
10	24			2.04	1.96	2.44	2.34	2.64	2.40	2.76	2.40	3.01	2.58	3.11	2.52
(m^3/min)	26			2.03	1.95	2.43	2.33	2.61	2.39	2.73	2.39	2.96	2.56	3.06	2.51
	28	1.84	1.77	2.03	1.95	2.42	2.32	2.59	2.38	2.70	2.38	2.92	2.55	3.01	2.49
	30	1.84	1.77	2.03	1.95	2.40	2.30	2.56	2.37	2.67	2.37	2.87	2.53	2.97	2.48
	32	1.84	1.77	2.02	1.94	2.38	2.28	2.54	2.37	2.64	2.36	2.83	2.52	2.92	2.46
	34	1.84	1.77	2.02	1.94	2.37	2.28	2.51	2.36	2.59	2.34	2.77	2.50	2.86	2.45
	35	1.84	1.77	2.01	1.93	2.37	2.28	2.49	2.34	2.57	2.34	2.74	2.49	2.83	2.44
	36	1.84	1.77	2.01	1.93	2.35	2.26	2.48	2.34	2.55	2.33	2.69	2.47	2.78	2.42
	38	1.84	1.77	2.00	1.92	2.31	2.22	2.45	2.33	2.50	2.31	2.59	2.44	2.67	2.39
	39	1.84	1.77	2.00	1.92	2.29	2.20	2.44	2.33	2.47	2.30	2.54	2.43	2.61	2.38
	41	1.84	1.77	1.99	1.91	2.23	2.14	2.34	2.25	2.37	2.26	2.43	2.33	2.49	2.34
	43	1.84	1.77	1.99	1.91	2.16	2.07	2.24	2.15	2.27	2.18	2.31	2.22	2.37	2.28

Air flow	Ambient air temp. DB	Ambient air temp. WB	Indoor air temp. 16 °CDB	18 °CDB	20 °CDB	22 °CDB	24 °CDB
Lo	-19.8	-20	1.66	1.66	1.66	1.66	1.66
	-17.8	-18	1.77	1.77	1.77	1.77	1.77
	-15.7	-16	1.87	1.87	1.87	1.87	1.87
	-13.7	-14	1.98	1.98	1.98	1.98	1.98
	-11.7	-12	2.09	2.09	2.09	2.09	2.09
	-9.6	-10	2.19	2.19	2.19	2.19	2.19
	-7.5	-8	2.33	2.33	2.33	2.33	2.33
10	-5.5	-6	2.46	2.46	2.46	2.46	2.46
(m^3/min)	-3.4	-4	2.55	2.54	2.54	2.51	2.49
	-1.3	-2	2.63	2.62	2.62	2.57	2.52
	0.8	0	2.77	2.73	2.70	2.60	2.50
	3.9	3	3.01	2.90	2.80	2.64	2.48
	7.0	6	3.29	3.07	2.86	2.66	2.46
	10.1	9	3.27	3.06	2.85	2.64	2.44
	13.2	12	3.25	3.04	2.83	2.62	2.42
	16.9	15.5	3.22	3.01	2.81	2.60	2.39

Note(1) This data shows average statuses out of those possible to occur in the system control.
(Depending on controls, there may be ranges where the operation is not conducted continuously.)
(2) Symbols are as follows
TC :Total cooling capacity(kW)
SHC :Sensible heat capacity(kW)

Cool mode	Uhi	Hi	Me	Lo
Air flow	12.00	12	11	10
TC	2.80	2.80	2.65	2.49
SHF	0.96	0.96	0.94	0.94

Heat mode	Uhi	Hi	Me	Lo
Air flow	12	12	11	10
Heating capacity	3.20	3.20	3.04	2.86

Model **FDFL45KXE6** Cool Mode

Air flow	Ambient air temp. (℃DB)	Indoor air temperature 21 ℃DB 14 ℃WB TC	21 ℃DB 14 ℃WB SHC	23 ℃DB 16 ℃WB TC	23 ℃DB 16 ℃WB SHC	26 ℃DB 18 ℃WB TC	26 ℃DB 18 ℃WB SHC	27 ℃DB 19 ℃WB TC	27 ℃DB 19 ℃WB SHC	28 ℃DB 20 ℃WB TC	28 ℃DB 20 ℃WB SHC	31 ℃DB 22 ℃WB TC	31 ℃DB 22 ℃WB SHC	33 ℃DB 24 ℃WB TC	33 ℃DB 24 ℃WB SHC
Uhi	10			3.69	3.35	4.41	3.79	4.77	3.86	5.07	3.90	5.68	4.22	5.90	4.13
	12			3.69	3.35	4.41	3.79	4.77	3.86	5.07	3.90	5.66	4.22	5.88	4.12
	14			3.69	3.35	4.41	3.79	4.77	3.86	5.06	3.89	5.64	4.21	5.85	4.11
	16			3.69	3.35	4.41	3.79	4.77	3.86	5.05	3.89	5.62	4.20	5.83	4.11
	18			3.69	3.35	4.41	3.79	4.77	3.86	5.05	3.89	5.60	4.19	5.80	4.10
	20			3.69	3.35	4.41	3.79	4.77	3.86	5.04	3.88	5.58	4.19	5.78	4.09
	22			3.68	3.35	4.41	3.79	4.77	3.86	5.02	3.88	5.51	4.16	5.70	4.06
14	24			3.68	3.35	4.41	3.79	4.77	3.86	4.99	3.87	5.44	4.14	5.62	4.04
(m^3/min)	26			3.68	3.35	4.39	3.78	4.73	3.84	4.93	3.84	5.35	4.11	5.53	4.01
	28	3.33	3.20	3.67	3.34	4.37	3.78	4.68	3.82	4.88	3.82	5.27	4.07	5.44	3.97
	30	3.33	3.20	3.66	3.34	4.33	3.76	4.64	3.81	4.82	3.80	5.19	4.04	5.36	3.95
	32	3.33	3.20	3.65	3.33	4.30	3.75	4.59	3.79	4.76	3.78	5.11	4.02	5.28	3.92
	34	3.33	3.20	3.64	3.33	4.28	3.74	4.53	3.77	4.69	3.75	5.00	3.98	5.17	3.89
	35	3.33	3.20	3.64	3.33	4.28	3.74	4.50	3.74	4.65	3.74	4.95	3.96	5.12	3.87
	36	3.33	3.20	3.63	3.33	4.24	3.72	4.48	3.75	4.60	3.72	4.86	3.93	5.02	3.84
	38	3.33	3.20	3.62	3.32	4.18	3.70	4.43	3.73	4.52	3.69	4.68	3.87	4.82	3.78
	39	3.33	3.20	3.62	3.32	4.15	3.69	4.41	3.72	4.47	3.67	4.59	3.84	4.72	3.75
	41	3.33	3.20	3.61	3.32	4.02	3.64	4.23	3.65	4.28	3.60	4.39	3.78	4.50	3.68
	43	3.33	3.20	3.59	3.31	3.90	3.58	4.05	3.59	4.09	3.54	4.18	3.71	4.28	3.61

Heat Mode

Air flow	Ambient air temp. DB	Ambient air temp. WB	Indoor air temp. 16 ℃CDB	18 ℃CDB	20 ℃CDB	22 ℃CDB	24 ℃CDB
Uhi	-19.8	-20	2.90	2.90	2.90	2.90	2.90
	-17.8	-18	3.09	3.09	3.09	3.09	3.09
	-15.7	-16	3.27	3.27	3.27	3.27	3.27
	-13.7	-14	3.46	3.46	3.46	3.46	3.46
	-11.7	-12	3.65	3.65	3.65	3.65	3.65
	-9.6	-10	3.83	3.83	3.83	3.83	3.83
	-7.5	-8	4.07	4.07	4.07	4.07	4.07
14	-5.5	-6	4.30	4.30	4.30	4.30	4.30
(m^3/min)	-3.4	-4	4.45	4.44	4.44	4.39	4.35
	-1.3	-2	4.60	4.59	4.58	4.49	4.40
	0.8	0	4.85	4.78	4.71	4.54	4.38
	3.9	3	5.26	5.08	4.89	4.61	4.34
	7.0	6	5.75	5.38	5.00	4.65	4.30
	10.1	9	5.71	5.35	4.98	4.62	4.26
	13.2	12	5.68	5.31	4.95	4.59	4.23
	16.9	15.5	5.63	5.27	4.91	4.54	4.18

Air flow	Ambient air temp. (℃DB)	Indoor air temperature 21 ℃DB 14 ℃WB TC	21 ℃DB 14 ℃WB SHC	23 ℃DB 16 ℃WB TC	23 ℃DB 16 ℃WB SHC	26 ℃DB 18 ℃WB TC	26 ℃DB 18 ℃WB SHC	27 ℃DB 19 ℃WB TC	27 ℃DB 19 ℃WB SHC	28 ℃DB 20 ℃WB TC	28 ℃DB 20 ℃WB SHC	31 ℃DB 22 ℃WB TC	31 ℃DB 22 ℃WB SHC	33 ℃DB 24 ℃WB TC	33 ℃DB 24 ℃WB SHC
Hi	10			3.69	3.35	4.41	3.79	4.77	3.86	5.07	3.90	5.68	4.22	5.90	4.13
	12			3.69	3.35	4.41	3.79	4.77	3.86	5.07	3.90	5.66	4.22	5.88	4.12
	14			3.69	3.35	4.41	3.79	4.77	3.86	5.06	3.89	5.64	4.21	5.85	4.11
	16			3.69	3.35	4.41	3.79	4.77	3.86	5.05	3.89	5.62	4.20	5.83	4.11
	18			3.69	3.35	4.41	3.79	4.77	3.86	5.05	3.89	5.60	4.19	5.80	4.10
	20			3.69	3.35	4.41	3.79	4.77	3.86	5.04	3.88	5.58	4.19	5.78	4.09
	22			3.68	3.35	4.41	3.79	4.77	3.86	5.02	3.88	5.51	4.16	5.70	4.06
14	24			3.68	3.35	4.41	3.79	4.77	3.86	4.99	3.87	5.44	4.14	5.62	4.04
(m^3/min)	26			3.68	3.35	4.39	3.78	4.73	3.84	4.93	3.84	5.35	4.11	5.53	4.01
	28	3.33	3.20	3.67	3.34	4.37	3.78	4.68	3.82	4.88	3.82	5.27	4.07	5.44	3.97
	30	3.33	3.20	3.66	3.34	4.33	3.76	4.64	3.81	4.82	3.80	5.19	4.04	5.36	3.95
	32	3.33	3.20	3.65	3.33	4.30	3.75	4.59	3.79	4.76	3.78	5.11	4.02	5.28	3.92
	34	3.33	3.20	3.64	3.33	4.28	3.74	4.53	3.77	4.69	3.75	5.00	3.98	5.17	3.89
	35	3.33	3.20	3.64	3.33	4.28	3.74	4.50	3.74	4.65	3.74	4.95	3.96	5.12	3.87
	36	3.33	3.20	3.63	3.33	4.24	3.72	4.48	3.75	4.60	3.72	4.86	3.93	5.02	3.84
	38	3.33	3.20	3.62	3.32	4.18	3.70	4.43	3.73	4.52	3.69	4.68	3.87	4.82	3.78
	39	3.33	3.20	3.62	3.32	4.15	3.69	4.41	3.72	4.47	3.67	4.59	3.84	4.72	3.75
	41	3.33	3.20	3.61	3.32	4.02	3.64	4.23	3.65	4.28	3.60	4.39	3.78	4.50	3.68
	43	3.33	3.20	3.59	3.31	3.90	3.58	4.05	3.59	4.09	3.54	4.18	3.71	4.28	3.61

Air flow	Ambient air temp. DB	Ambient air temp. WB	Indoor air temp. 16 ℃CDB	18 ℃CDB	20 ℃CDB	22 ℃CDB	24 ℃CDB
Hi	-19.8	-20	2.90	2.90	2.90	2.90	2.90
	-17.8	-18	3.09	3.09	3.09	3.09	3.09
	-15.7	-16	3.27	3.27	3.27	3.27	3.27
	-13.7	-14	3.46	3.46	3.46	3.46	3.46
	-11.7	-12	3.65	3.65	3.65	3.65	3.65
	-9.6	-10	3.83	3.83	3.83	3.83	3.83
	-7.5	-8	4.07	4.07	4.07	4.07	4.07
14	-5.5	-6	4.30	4.30	4.30	4.30	4.30
(m^3/min)	-3.4	-4	4.45	4.44	4.44	4.39	4.35
	-1.3	-2	4.60	4.59	4.58	4.49	4.40
	0.8	0	4.85	4.78	4.71	4.54	4.38
	3.9	3	5.26	5.08	4.89	4.61	4.34
	7.0	6	5.75	5.38	5.00	4.65	4.30
	10.1	9	5.71	5.35	4.98	4.62	4.26
	13.2	12	5.68	5.31	4.95	4.59	4.23
	16.9	15.5	5.63	5.27	4.91	4.54	4.18

Air flow	Ambient air temp. (℃DB)	Indoor air temperature 21 ℃DB 14 ℃WB TC	21 ℃DB 14 ℃WB SHC	23 ℃DB 16 ℃WB TC	23 ℃DB 16 ℃WB SHC	26 ℃DB 18 ℃WB TC	26 ℃DB 18 ℃WB SHC	27 ℃DB 19 ℃WB TC	27 ℃DB 19 ℃WB SHC	28 ℃DB 20 ℃WB TC	28 ℃DB 20 ℃WB SHC	31 ℃DB 22 ℃WB TC	31 ℃DB 22 ℃WB SHC	33 ℃DB 24 ℃WB TC	33 ℃DB 24 ℃WB SHC
Me	10			3.31	2.93	3.96	3.32	4.28	3.38	4.56	3.43	5.10	3.70	5.30	3.62
	12			3.31	2.93	3.96	3.32	4.28	3.38	4.55	3.42	5.09	3.70	5.28	3.61
	14			3.31	2.93	3.96	3.32	4.28	3.38	4.54	3.42	5.07	3.69	5.25	3.60
	16			3.31	2.93	3.96	3.32	4.28	3.38	4.54	3.42	5.05	3.68	5.23	3.59
	18			3.31	2.93	3.96	3.32	4.28	3.38	4.53	3.41	5.03	3.68	5.21	3.59
	20			3.31	2.93	3.96	3.32	4.28	3.38	4.53	3.41	5.01	3.67	5.18	3.58
	22			3.31	2.93	3.96	3.32	4.28	3.38	4.50	3.40	4.95	3.65	5.11	3.56
12	24			3.30	2.93	3.96	3.32	4.28	3.38	4.48	3.40	4.88	3.62	5.04	3.53
(m^3/min)	26			3.30	2.93	3.94	3.31	4.24	3.37	4.43	3.38	4.81	3.60	4.97	3.51
	28	2.99	2.87	3.30	2.93	3.92	3.31	4.20	3.35	4.38	3.36	4.73	3.57	4.89	3.48
	30	2.99	2.87	3.29	2.92	3.89	3.29	4.16	3.34	4.33	3.33	4.66	3.55	4.82	3.46
	32	2.99	2.87	3.28	2.92	3.86	3.28	4.12	3.32	4.28	3.31	4.59	3.52	4.74	3.44
	34	2.99	2.87	3.27	2.92	3.84	3.27	4.07	3.30	4.21	3.29	4.49	3.48	4.64	3.40
	35	2.99	2.87	3.26	2.91	3.84	3.27	4.04	3.27	4.17	3.27	4.44	3.46	4.60	3.39
	36	2.99	2.87	3.26	2.91	3.81	3.26	4.02	3.28	4.13	3.26	4.36	3.44	4.51	3.36
	38	2.99	2.87	3.25	2.91	3.75	3.24	3.98	3.27	4.05	3.23	4.20	3.38	4.33	3.30
	39	2.99	2.87	3.25	2.91	3.72	3.23	3.96	3.26	4.01	3.21	4.12	3.36	4.24	3.27
	41	2.99	2.87	3.24	2.90	3.61	3.18	3.80	3.20	3.84	3.15	3.94	3.30	4.04	3.21
	43	2.99	2.87	3.23	2.90	3.50	3.14	3.64	3.14	3.68	3.09	3.76	3.24	3.84	3.15

Air flow	Ambient air temp. DB	Ambient air temp. WB	Indoor air temp. 16 ℃CDB	18 ℃CDB	20 ℃CDB	22 ℃CDB	24 ℃CDB
Me	-19.8	-20	2.60	2.60	2.60	2.60	2.60
	-17.8	-18	2.77	2.77	2.77	2.77	2.77
	-15.7	-16	2.93	2.93	2.93	2.93	2.93
	-13.7	-14	3.10	3.10	3.10	3.10	3.10
	-11.7	-12	3.27	3.27	3.27	3.27	3.27
	-9.6	-10	3.43	3.43	3.43	3.43	3.43
	-7.5	-8	3.64	3.64	3.64	3.64	3.64
12	-5.5	-6	3.85	3.85	3.85	3.85	3.85
(m^3/min)	-3.4	-4	3.99	3.98	3.98	3.94	3.90
	-1.3	-2	4.12	4.11	4.10	4.02	3.94
	0.8	0	4.35	4.28	4.22	4.07	3.92
	3.9	3	4.72	4.55	4.38	4.13	3.89
	7.0	6	5.15	4.82	4.48	4.17	3.85
	10.1	9	5.12	4.79	4.46	4.14	3.82
	13.2	12	5.08	4.76	4.44	4.11	3.79
	16.9	15.5	5.05	4.72	4.40	4.07	3.75

Air flow	Ambient air temp. (℃DB)	Indoor air temperature 21 ℃DB 14 ℃WB TC	21 ℃DB 14 ℃WB SHC	23 ℃DB 16 ℃WB TC	23 ℃DB 16 ℃WB SHC	26 ℃DB 18 ℃WB TC	26 ℃DB 18 ℃WB SHC	27 ℃DB 19 ℃WB TC	27 ℃DB 19 ℃WB SHC	28 ℃DB 20 ℃WB TC	28 ℃DB 20 ℃WB SHC	31 ℃DB 22 ℃WB TC	31 ℃DB 22 ℃WB SHC	33 ℃DB 24 ℃WB TC	33 ℃DB 24 ℃WB SHC
Lo	10			2.89	2.53	3.46	2.87	3.74	2.92	3.98	2.95	4.46	3.19	4.63	3.12
	12			2.89	2.53	3.46	2.87	3.74	2.92	3.98	2.95	4.44	3.19	4.61	3.11
	14			2.89	2.53	3.46	2.87	3.74	2.92	3.97	2.95	4.43	3.18	4.59	3.10
	16			2.89	2.53	3.46	2.87	3.74	2.92	3.96	2.94	4.41	3.17	4.57	3.10
	18			2.89	2.53	3.46	2.87	3.74	2.92	3.96	2.94	4.39	3.17	4.55	3.09
	20			2.89	2.53	3.46	2.87	3.74	2.92	3.95	2.94	4.38	3.16	4.53	3.08
	22			2.89	2.53	3.46	2.87	3.74	2.92	3.94	2.94	4.32	3.14	4.47	3.06
10	24			2.89	2.53	3.46	2.87	3.74	2.92	3.92	2.93	4.27	3.12	4.41	3.04
(m^3/min)	26			2.88	2.53	3.44	2.86	3.71	2.91	3.87	2.91	4.20	3.10	4.34	3.02
	28	2.61	2.50	2.88	2.53	3.42	2.85	3.67	2.89	3.83	2.89	4.13	3.07	4.27	3.00
	30	2.61	2.50	2.87	2.52	3.40	2.84	3.64	2.88	3.78	2.87	4.07	3.05	4.21	2.98
	32	2.61	2.50	2.87	2.52	3.37	2.83	3.60	2.86	3.74	2.86	4.01	3.03	4.14	2.96
	34	2.61	2.50	2.86	2.52	3.36	2.82	3.55	2.84	3.68	2.84	3.92	3.00	4.06	2.93
	35	2.61	2.50	2.85	2.51	3.35	2.82	3.53	2.82	3.65	2.83	3.88	2.99	4.02	2.92
	36	2.61	2.50	2.85	2.51	3.33	2.81	3.51	2.83	3.61	2.81	3.81	2.96	3.94	2.89
	38	2.61	2.50	2.84	2.51	3.28	2.79	3.48	2.82	3.54	2.78	3.67	2.91	3.78	2.84
	39	2.61	2.50	2.84	2.51	3.25	2.78	3.46	2.81	3.51	2.77	3.60	2.89	3.70	2.82
	41	2.61	2.50	2.83	2.51	3.15	2.74	3.32	2.75	3.36	2.72	3.44	2.83	3.53	2.74
	43	2.61	2.50	2.82	2.50	3.06	2.70	3.18	2.70	3.21	2.66	3.28	2.78	3.36	2.69

Air flow	Ambient air temp. DB	Ambient air temp. WB	Indoor air temp. 16 ℃CDB	18 ℃CDB	20 ℃CDB	22 ℃CDB	24 ℃CDB
Lo	-19.8	-20	2.27	2.27	2.27	2.27	2.27
	-17.8	-18	2.41	2.41	2.41	2.41	2.41
	-15.7	-16	2.56	2.56	2.56	2.56	2.56
	-13.7	-14	2.71	2.71	2.71	2.71	2.71
	-11.7	-12	2.85	2.85	2.85	2.85	2.85
	-9.6	-10	3.00	3.00	3.00	3.00	3.00
	-7.5	-8	3.18	3.18	3.18	3.18	3.18
10	-5.5	-6	3.36	3.36	3.36	3.36	3.36
(m^3/min)	-3.4	-4	3.48	3.48	3.47	3.44	3.40
	-1.3	-2	3.60	3.59	3.58	3.51	3.44
	0.8	0	3.79	3.74	3.69	3.55	3.42
	3.9	3	4.12	3.97	3.82	3.61	3.39
	7.0	6	4.50	4.20	3.91	3.64	3.36
	10.1	9	4.47	4.18	3.90	3.61	3.33
	13.2	12	4.44	4.15	3.87	3.59	3.30
	16.9	15.5	4.40	4.12	3.84	3.55	3.27

Note(1) This data shows average statuses out of those possible to occur in the system control.
(Depending on controls, there may be ranges where the operation is not conducted continuously.)
(2) Symbols are as follows
TC :Total cooling capacity(kW)
SHC :Sensible heat capacity(kW)

Cool mode	Uhi	Hi	Me	Lo
Air flow	14.00	14	12	10
TC	4.50	4.50	4.04	3.53
SHF	0.83	0.83	0.81	0.80

Heat mode	Uhi	Hi	Me	Lo
Air flow	14	14	12	10
Heating capacity	5.00	5.00	4.48	3.91

Model **FDFL71KXE6** Cool Mode

Air flow	Ambient air temp. (℃DB)	Indoor air temperature 21 ℃DB 14 ℃WB TC	21 ℃DB 14 ℃WB SHC	23 ℃DB 16 ℃WB TC	23 ℃DB 16 ℃WB SHC	26 ℃DB 18 ℃WB TC	26 ℃DB 18 ℃WB SHC	27 ℃DB 19 ℃WB TC	27 ℃DB 19 ℃WB SHC	28 ℃DB 20 ℃WB TC	28 ℃DB 20 ℃WB SHC	31 ℃DB 22 ℃WB TC	31 ℃DB 22 ℃WB SHC	33 ℃DB 24 ℃WB TC	33 ℃DB 24 ℃WB SHC
	10			5.82	4.76	6.96	5.38	7.53	5.51	8.01	5.57	8.97	6.01	9.31	5.86
	12			5.82	4.76	6.96	5.38	7.53	5.51	8.00	5.57	8.94	6.00	9.27	5.84
	14			5.82	4.76	6.96	5.38	7.53	5.51	7.99	5.57	8.90	5.98	9.23	5.83
	16			5.82	4.76	6.96	5.38	7.53	5.51	7.97	5.56	8.87	5.97	9.19	5.81
	18			5.82	4.76	6.96	5.38	7.53	5.51	7.96	5.55	8.84	5.96	9.15	5.80
Uhi	20			5.82	4.76	6.96	5.38	7.53	5.51	7.95	5.55	8.81	5.95	9.11	5.79
	22			5.81	4.76	6.95	5.38	7.53	5.51	7.92	5.54	8.70	5.91	8.99	5.75
18	24			5.80	4.75	6.95	5.38	7.53	5.51	7.88	5.52	8.58	5.87	8.86	5.70
(m^3/min)	26			5.80	4.75	6.92	5.37	7.46	5.48	7.79	5.49	8.45	5.82	8.73	5.66
	28	5.25	4.69	5.79	4.75	6.89	5.35	7.38	5.45	7.69	5.45	8.31	5.77	8.59	5.62
	30	5.25	4.69	5.78	4.75	6.83	5.33	7.31	5.42	7.60	5.41	8.19	5.72	8.46	5.57
	32	5.25	4.69	5.77	4.74	6.78	5.31	7.24	5.38	7.51	5.38	8.06	5.68	8.33	5.53
	34	5.25	4.69	5.75	4.73	6.76	5.30	7.15	5.34	7.39	5.32	7.89	5.62	8.16	5.47
	35	5.25	4.69	5.74	4.73	6.75	5.30	7.10	5.33	7.33	5.30	7.80	5.59	8.08	5.44
	36	5.25	4.69	5.73	4.72	6.69	5.27	7.06	5.31	7.26	5.27	7.66	5.52	7.92	5.39
	38	5.25	4.69	5.72	4.72	6.59	5.23	6.99	5.28	7.12	5.22	7.38	5.43	7.61	5.29
	39	5.25	4.69	5.71	4.71	6.54	5.21	6.96	5.27	7.05	5.19	7.24	5.38	7.45	5.24
	41	5.25	4.69	5.69	4.71	6.35	5.12	6.67	5.15	6.76	5.08	6.92	5.26	7.10	5.11
	43	5.25	4.69	5.67	4.70	6.15	5.04	6.39	5.04	6.46	4.94	6.60	5.15	6.75	5.01

Heat Mode

Air flow	Ambient air temp. DB	Ambient air temp. WB	Indoor air temp. 16 ℃CDB	18 ℃CDB	20 ℃CDB	22 ℃CDB	24 ℃CDB
	-19.8	-20	4.64	4.64	4.64	4.64	4.64
	-17.8	-18	4.94	4.94	4.94	4.94	4.94
	-15.7	-16	5.24	5.24	5.24	5.24	5.24
	-13.7	-14	5.54	5.54	5.54	5.54	5.54
	-11.7	-12	5.83	5.83	5.83	5.83	5.83
Uhi	-9.6	-10	6.13	6.13	6.13	6.13	6.13
	-7.5	-8	6.51	6.51	6.51	6.51	6.51
18	-5.5	-6	6.88	6.88	6.88	6.88	6.88
(m^3/min)	-3.4	-4	7.12	7.11	7.10	7.03	6.96
	-1.3	-2	7.36	7.34	7.32	7.18	7.04
	0.8	0	7.76	7.65	7.54	7.27	7.00
	3.9	3	8.42	8.12	7.82	7.38	6.94
	7.0	6	9.20	8.60	8.00	7.44	6.88
	10.1	9	9.14	8.56	7.97	7.40	6.82
	13.2	12	9.08	8.50	7.92	7.34	6.76
	16.9	15.5	9.01	8.43	7.85	7.27	6.69

Air flow	Ambient air temp. (℃DB)	Indoor air temperature 21 ℃DB 14 ℃WB TC	21 ℃DB 14 ℃WB SHC	23 ℃DB 16 ℃WB TC	23 ℃DB 16 ℃WB SHC	26 ℃DB 18 ℃WB TC	26 ℃DB 18 ℃WB SHC	27 ℃DB 19 ℃WB TC	27 ℃DB 19 ℃WB SHC	28 ℃DB 20 ℃WB TC	28 ℃DB 20 ℃WB SHC	31 ℃DB 22 ℃WB TC	31 ℃DB 22 ℃WB SHC	33 ℃DB 24 ℃WB TC	33 ℃DB 24 ℃WB SHC
	10			5.82	4.76	6.96	5.38	7.53	5.51	8.01	5.57	8.97	6.01	9.31	5.86
	12			5.82	4.76	6.96	5.38	7.53	5.51	8.00	5.57	8.94	6.00	9.27	5.84
	14			5.82	4.76	6.96	5.38	7.53	5.51	7.99	5.57	8.90	5.98	9.23	5.83
	16			5.82	4.76	6.96	5.38	7.53	5.51	7.97	5.56	8.87	5.97	9.19	5.81
	18			5.82	4.76	6.96	5.38	7.53	5.51	7.96	5.55	8.84	5.96	9.15	5.80
Hi	20			5.82	4.76	6.96	5.38	7.53	5.51	7.95	5.55	8.81	5.95	9.11	5.79
	22			5.81	4.76	6.95	5.38	7.53	5.51	7.92	5.54	8.70	5.91	8.99	5.75
18	24			5.80	4.75	6.95	5.38	7.53	5.51	7.88	5.52	8.58	5.87	8.86	5.70
(m^3/min)	26			5.80	4.75	6.92	5.37	7.46	5.48	7.79	5.49	8.45	5.82	8.73	5.66
	28	5.25	4.69	5.79	4.75	6.89	5.35	7.38	5.45	7.69	5.45	8.31	5.77	8.59	5.62
	30	5.25	4.69	5.78	4.75	6.83	5.33	7.31	5.42	7.60	5.41	8.19	5.72	8.46	5.57
	32	5.25	4.69	5.77	4.74	6.78	5.31	7.24	5.38	7.51	5.38	8.06	5.68	8.33	5.53
	34	5.25	4.69	5.75	4.73	6.76	5.30	7.15	5.34	7.39	5.32	7.89	5.62	8.16	5.47
	35	5.25	4.69	5.74	4.73	6.75	5.30	7.10	5.33	7.33	5.30	7.80	5.59	8.08	5.44
	36	5.25	4.69	5.73	4.72	6.69	5.27	7.06	5.31	7.26	5.27	7.66	5.52	7.92	5.39
	38	5.25	4.69	5.72	4.72	6.59	5.23	6.99	5.28	7.12	5.22	7.38	5.43	7.61	5.29
	39	5.25	4.69	5.71	4.71	6.54	5.21	6.96	5.27	7.05	5.19	7.24	5.38	7.45	5.24
	41	5.25	4.69	5.69	4.71	6.35	5.12	6.67	5.15	6.76	5.08	6.92	5.26	7.10	5.11
	43	5.25	4.69	5.67	4.70	6.15	5.04	6.39	5.04	6.46	4.94	6.60	5.15	6.75	5.01

Air flow	Ambient air temp. DB	Ambient air temp. WB	Indoor air temp. 16 ℃CDB	18 ℃CDB	20 ℃CDB	22 ℃CDB	24 ℃CDB
	-19.8	-20	4.64	4.64	4.64	4.64	4.64
	-17.8	-18	4.94	4.94	4.94	4.94	4.94
	-15.7	-16	5.24	5.24	5.24	5.24	5.24
	-13.7	-14	5.54	5.54	5.54	5.54	5.54
	-11.7	-12	5.83	5.83	5.83	5.83	5.83
Hi	-9.6	-10	6.13	6.13	6.13	6.13	6.13
	-7.5	-8	6.51	6.51	6.51	6.51	6.51
18	-5.5	-6	6.88	6.88	6.88	6.88	6.88
(m^3/min)	-3.4	-4	7.12	7.11	7.10	7.03	6.96
	-1.3	-2	7.36	7.34	7.32	7.18	7.04
	0.8	0	7.76	7.65	7.54	7.27	7.00
	3.9	3	8.42	8.12	7.82	7.38	6.94
	7.0	6	9.20	8.60	8.00	7.44	6.88
	10.1	9	9.14	8.56	7.97	7.40	6.82
	13.2	12	9.08	8.50	7.92	7.34	6.76
	16.9	15.5	9.01	8.43	7.85	7.27	6.69

Air flow	Ambient air temp. (℃DB)	Indoor air temperature 21 ℃DB 14 ℃WB TC	21 ℃DB 14 ℃WB SHC	23 ℃DB 16 ℃WB TC	23 ℃DB 16 ℃WB SHC	26 ℃DB 18 ℃WB TC	26 ℃DB 18 ℃WB SHC	27 ℃DB 19 ℃WB TC	27 ℃DB 19 ℃WB SHC	28 ℃DB 20 ℃WB TC	28 ℃DB 20 ℃WB SHC	31 ℃DB 22 ℃WB TC	31 ℃DB 22 ℃WB SHC	33 ℃DB 24 ℃WB TC	33 ℃DB 24 ℃WB SHC
	10			5.11	4.14	6.10	4.68	6.60	4.78	7.03	4.85	7.87	5.24	8.17	5.10
	12			5.11	4.14	6.10	4.68	6.60	4.78	7.02	4.85	7.84	5.23	8.14	5.09
	14			5.11	4.14	6.10	4.68	6.60	4.78	7.01	4.84	7.81	5.22	8.10	5.08
	16			5.11	4.14	6.10	4.68	6.60	4.78	7.00	4.84	7.78	5.20	8.07	5.07
	18			5.11	4.14	6.10	4.68	6.60	4.78	6.99	4.83	7.76	5.20	8.03	5.05
Me	20			5.11	4.14	6.10	4.68	6.60	4.78	6.98	4.83	7.73	5.18	8.00	5.04
	22			5.10	4.14	6.10	4.68	6.60	4.78	6.95	4.82	7.63	5.15	7.89	5.01
15	24			5.09	4.13	6.10	4.68	6.60	4.78	6.91	4.80	7.53	5.10	7.78	4.97
(m^3/min)	26			5.09	4.13	6.07	4.67	6.54	4.76	6.83	4.77	7.41	5.06	7.66	4.92
	28	4.61	4.08	5.08	4.13	6.04	4.65	6.48	4.73	6.75	4.74	7.29	5.01	7.54	4.88
	30	4.61	4.08	5.07	4.13	6.00	4.64	6.42	4.71	6.67	4.70	7.18	4.97	7.43	4.84
	32	4.61	4.08	5.06	4.12	5.95	4.61	6.35	4.68	6.59	4.67	7.07	4.93	7.31	4.80
	34	4.61	4.08	5.04	4.11	5.93	4.61	6.27	4.65	6.49	4.63	6.92	4.87	7.16	4.75
	35	4.61	4.08	5.03	4.11	5.92	4.60	6.23	4.61	6.44	4.61	6.85	4.85	7.09	4.72
	36	4.61	4.08	5.03	4.11	5.87	4.58	6.20	4.62	6.37	4.58	6.73	4.80	6.95	4.68
	38	4.61	4.08	5.02	4.10	5.78	4.54	6.14	4.59	6.25	4.54	6.48	4.71	6.67	4.58
	39	4.61	4.08	5.01	4.10	5.74	4.53	6.11	4.58	6.19	4.51	6.36	4.67	6.54	4.54
	41	4.61	4.08	4.99	4.09	5.57	4.45	5.86	4.48	5.93	4.41	6.07	4.57	6.23	4.44
	43	4.61	4.08	4.97	4.08	5.40	4.38	5.61	4.38	5.67	4.31	5.79	4.47	5.92	4.34

Air flow	Ambient air temp. DB	Ambient air temp. WB	Indoor air temp. 16 ℃CDB	18 ℃CDB	20 ℃CDB	22 ℃CDB	24 ℃CDB
	-19.8	-20	4.21	4.21	4.21	4.21	4.21
	-17.8	-18	4.48	4.48	4.48	4.48	4.48
	-15.7	-16	4.75	4.75	4.75	4.75	4.75
	-13.7	-14	5.02	5.02	5.02	5.02	5.02
	-11.7	-12	5.29	5.29	5.29	5.29	5.29
Me	-9.6	-10	5.56	5.56	5.56	5.56	5.56
	-7.5	-8	5.90	5.90	5.90	5.90	5.90
15	-5.5	-6	6.24	6.24	6.24	6.24	6.24
(m^3/min)	-3.4	-4	6.45	6.44	6.43	6.37	6.31
	-1.3	-2	6.67	6.65	6.63	6.51	6.38
	0.8	0	7.03	6.93	6.83	6.59	6.34
	3.9	3	7.63	7.36	7.09	6.69	6.29
	7.0	6	8.34	7.79	7.25	6.74	6.24
	10.1	9	8.28	7.75	7.22	6.70	6.18
	13.2	12	8.23	7.70	7.18	6.65	6.13
	16.9	15.5	8.17	7.64	7.11	6.59	6.06

Air flow	Ambient air temp. (℃DB)	Indoor air temperature 21 ℃DB 14 ℃WB TC	21 ℃DB 14 ℃WB SHC	23 ℃DB 16 ℃WB TC	23 ℃DB 16 ℃WB SHC	26 ℃DB 18 ℃WB TC	26 ℃DB 18 ℃WB SHC	27 ℃DB 19 ℃WB TC	27 ℃DB 19 ℃WB SHC	28 ℃DB 20 ℃WB TC	28 ℃DB 20 ℃WB SHC	31 ℃DB 22 ℃WB TC	31 ℃DB 22 ℃WB SHC	33 ℃DB 24 ℃WB TC	33 ℃DB 24 ℃WB SHC
	10			4.29	3.41	5.12	3.85	5.54	3.94	5.90	3.99	6.61	4.31	6.86	4.20
	12			4.29	3.41	5.12	3.85	5.54	3.94	5.89	3.99	6.58	4.30	6.83	4.19
	14			4.29	3.41	5.12	3.85	5.54	3.94	5.88	3.99	6.56	4.29	6.80	4.18
	16			4.29	3.41	5.12	3.85	5.54	3.94	5.87	3.98	6.54	4.29	6.77	4.17
	18			4.29	3.41	5.12	3.85	5.54	3.94	5.87	3.98	6.51	4.27	6.74	4.15
Lo	20			4.29	3.41	5.12	3.85	5.54	3.94	5.86	3.98	6.49	4.27	6.71	4.14
	22			4.28	3.40	5.12	3.85	5.54	3.94	5.83	3.96	6.41	4.23	6.62	4.11
12	24			4.27	3.40	5.12	3.85	5.54	3.94	5.80	3.95	6.32	4.20	6.53	4.08
(m^3/min)	26			4.27	3.40	5.10	3.84	5.49	3.92	5.74	3.93	6.22	4.16	6.43	4.05
	28	3.87	3.35	4.27	3.40	5.07	3.82	5.44	3.89	5.67	3.90	6.12	4.12	6.33	4.01
	30	3.87	3.35	4.26	3.39	5.03	3.81	5.39	3.87	5.60	3.87	6.03	4.08	6.23	3.98
	32	3.87	3.35	4.25	3.39	4.99	3.79	5.33	3.85	5.54	3.85	5.94	4.05	6.14	3.94
	34	3.87	3.35	4.23	3.38	4.98	3.79	5.26	3.82	5.45	3.81	5.81	4.00	6.01	3.89
	35	3.87	3.35	4.23	3.38	4.97	3.78	5.23	3.82	5.40	3.79	5.75	3.98	5.95	3.87
	36	3.87	3.35	4.22	3.37	4.93	3.76	5.20	3.79	5.35	3.77	5.65	3.94	5.83	3.83
	38	3.87	3.35	4.21	3.37	4.86	3.73	5.15	3.77	5.25	3.73	5.44	3.86	5.60	3.75
	39	3.87	3.35	4.20	3.36	4.82	3.72	5.13	3.76	5.20	3.71	5.34	3.83	5.49	3.72
	41	3.87	3.35	4.19	3.36	4.67	3.65	4.92	3.68	4.98	3.62	5.10	3.74	5.23	3.63
	43	3.87	3.35	4.18	3.36	4.53	3.59	4.71	3.59	4.76	3.54	4.86	3.65	4.97	3.55

Air flow	Ambient air temp. DB	Ambient air temp. WB	Indoor air temp. 16 ℃CDB	18 ℃CDB	20 ℃CDB	22 ℃CDB	24 ℃CDB
	-19.8	-20	3.53	3.53	3.53	3.53	3.53
	-17.8	-18	3.76	3.76	3.76	3.76	3.76
	-15.7	-16	3.99	3.99	3.99	3.99	3.99
	-13.7	-14	4.21	4.21	4.21	4.21	4.21
	-11.7	-12	4.44	4.44	4.44	4.44	4.44
Lo	-9.6	-10	4.67	4.67	4.67	4.67	4.67
	-7.5	-8	4.95	4.95	4.95	4.95	4.95
12	-5.5	-6	5.24	5.24	5.24	5.24	5.24
(m^3/min)	-3.4	-4	5.42	5.41	5.40	5.35	5.30
	-1.3	-2	5.60	5.59	5.57	5.47	5.36
	0.8	0	5.91	5.82	5.74	5.53	5.33
	3.9	3	6.41	6.18	5.95	5.62	5.28
	7.0	6	7.00	6.55	6.09	5.66	5.24
	10.1	9	6.96	6.51	6.07	5.63	5.19
	13.2	12	6.91	6.47	6.03	5.59	5.15
	16.9	15.5	6.86	6.42	5.98	5.53	5.09

Note(1) This data shows average statuses out of those possible to occur in the system control.
(Depending on controls, there may be ranges where the operation is not conducted continuously.)

(2) Symbols are as follows
TC :Total cooling capacity(kW)
SHC :Sensible heat capacity(kW)

Cool mode	Uhi	Hi	Me	Lo
Air flow	18.00	18	15	12
TC	7.10	7.10	6.23	5.23
SHF	0.75	0.75	0.74	0.73

Heat mode	Uhi	Hi	Me	Lo
Air flow	18	18	15	12
Heating capacity	8.00	8.00	7.25	6.09

Model **FDFU28KXE6** Cool Mode

Air flow	Ambient air temp. (℃DB)	Indoor air temperature 21 ℃CDB 14 ℃CWB TC	SHC	23 ℃CDB 16 ℃CWB TC	SHC	26 ℃CDB 18 ℃CWB TC	SHC	27 ℃CDB 19 ℃CWB TC	SHC	28 ℃CDB 20 ℃CWB TC	SHC	31 ℃CDB 22 ℃CWB TC	SHC	33 ℃CDB 24 ℃CWB TC	SHC
	10			2.30	2.21	2.74	2.63	2.97	2.75	3.16	2.77	3.54	3.02	3.67	2.96
	12			2.30	2.21	2.74	2.63	2.97	2.75	3.15	2.77	3.52	3.01	3.66	2.95
	14			2.30	2.21	2.74	2.63	2.97	2.75	3.15	2.77	3.51	3.01	3.64	2.95
	16			2.30	2.21	2.74	2.63	2.97	2.75	3.14	2.77	3.50	3.00	3.63	2.95
	18			2.30	2.21	2.74	2.63	2.97	2.75	3.14	2.77	3.49	3.00	3.61	2.94
Uhi	20			2.30	2.21	2.74	2.63	2.97	2.75	3.14	2.77	3.47	2.99	3.59	2.93
	22			2.29	2.20	2.74	2.63	2.97	2.75	3.12	2.76	3.43	2.98	3.54	2.92
12	24			2.29	2.20	2.74	2.63	2.97	2.75	3.11	2.76	3.39	2.97	3.50	2.91
(m^3/min)	26			2.29	2.20	2.73	2.62	2.94	2.74	3.07	2.74	3.33	2.95	3.44	2.88
	28	2.07	1.99	2.28	2.19	2.72	2.61	2.91	2.73	3.03	2.73	3.28	2.93	3.39	2.87
	30	2.07	1.99	2.28	2.19	2.70	2.59	2.88	2.72	3.00	2.72	3.23	2.91	3.34	2.85
	32	2.07	1.99	2.27	2.18	2.67	2.56	2.86	2.72	2.96	2.71	3.18	2.90	3.29	2.84
	34	2.07	1.99	2.27	2.18	2.66	2.55	2.82	2.70	2.92	2.69	3.11	2.88	3.22	2.82
	35	2.07	1.99	2.26	2.17	2.66	2.55	2.80	2.69	2.89	2.68	3.08	2.87	3.18	2.81
	36	2.07	1.99	2.26	2.17	2.64	2.53	2.79	2.68	2.86	2.67	3.02	2.85	3.12	2.79
	38	2.07	1.99	2.25	2.16	2.60	2.50	2.76	2.65	2.81	2.65	2.91	2.79	3.00	2.75
	39	2.07	1.99	2.25	2.16	2.58	2.48	2.74	2.63	2.78	2.64	2.86	2.75	2.94	2.73
	41	2.07	1.99	2.24	2.15	2.50	2.40	2.63	2.52	2.66	2.55	2.73	2.62	2.80	2.69
	43	2.07	1.99	2.24	2.15	2.43	2.33	2.52	2.42	2.55	2.45	2.60	2.50	2.66	2.55

Heat Mode

Air flow	Ambient air temp. DB	WB	Indoor air temp. 16 ℃CDB	18 ℃CDB	20 ℃CDB	22 ℃CDB	24 ℃CDB
	-19.8	-20	1.86	1.86	1.86	1.86	1.86
	-17.8	-18	1.98	1.98	1.98	1.98	1.98
	-15.7	-16	2.09	2.09	2.09	2.09	2.09
	-13.7	-14	2.21	2.21	2.21	2.21	2.21
	-11.7	-12	2.33	2.33	2.33	2.33	2.33
Uhi	-9.6	-10	2.45	2.45	2.45	2.45	2.45
	-7.5	-8	2.60	2.60	2.60	2.60	2.60
12	-5.5	-6	2.75	2.75	2.75	2.75	2.75
(m^3/min)	-3.4	-4	2.85	2.84	2.84	2.81	2.78
	-1.3	-2	2.94	2.94	2.93	2.87	2.82
	0.8	0	3.10	3.06	3.02	2.91	2.80
	3.9	3	3.37	3.25	3.13	2.95	2.78
	7.0	6	3.68	3.44	3.20	2.98	2.75
	10.1	9	3.66	3.42	3.19	2.96	2.73
	13.2	12	3.63	3.40	3.17	2.94	2.70
	16.9	15.5	3.60	3.37	3.14	2.91	2.68

Air flow	Ambient air temp. (℃DB)	Indoor air temperature 21 ℃CDB 14 ℃CWB TC	SHC	23 ℃CDB 16 ℃CWB TC	SHC	26 ℃CDB 18 ℃CWB TC	SHC	27 ℃CDB 19 ℃CWB TC	SHC	28 ℃CDB 20 ℃CWB TC	SHC	31 ℃CDB 22 ℃CWB TC	SHC	33 ℃CDB 24 ℃CWB TC	SHC
	10			2.30	2.21	2.74	2.63	2.97	2.75	3.16	2.77	3.54	3.02	3.67	2.96
	12			2.30	2.21	2.74	2.63	2.97	2.75	3.15	2.77	3.52	3.01	3.66	2.95
	14			2.30	2.21	2.74	2.63	2.97	2.75	3.15	2.77	3.51	3.01	3.64	2.95
	16			2.30	2.21	2.74	2.63	2.97	2.75	3.14	2.77	3.50	3.00	3.63	2.95
	18			2.30	2.21	2.74	2.63	2.97	2.75	3.14	2.77	3.49	3.00	3.61	2.94
Hi	20			2.30	2.21	2.74	2.63	2.97	2.75	3.14	2.77	3.47	2.99	3.59	2.93
	22			2.29	2.20	2.74	2.63	2.97	2.75	3.12	2.76	3.43	2.98	3.54	2.92
12	24			2.29	2.20	2.74	2.63	2.97	2.75	3.11	2.76	3.39	2.97	3.50	2.91
(m^3/min)	26			2.29	2.20	2.73	2.62	2.94	2.74	3.07	2.74	3.33	2.95	3.44	2.88
	28	2.07	1.99	2.28	2.19	2.72	2.61	2.91	2.73	3.03	2.73	3.28	2.93	3.39	2.87
	30	2.07	1.99	2.28	2.19	2.70	2.59	2.88	2.72	3.00	2.72	3.23	2.91	3.34	2.85
	32	2.07	1.99	2.27	2.18	2.67	2.56	2.86	2.72	2.96	2.71	3.18	2.90	3.29	2.84
	34	2.07	1.99	2.27	2.18	2.66	2.55	2.82	2.70	2.92	2.69	3.11	2.88	3.22	2.82
	35	2.07	1.99	2.26	2.17	2.66	2.55	2.80	2.69	2.89	2.68	3.08	2.87	3.18	2.81
	36	2.07	1.99	2.26	2.17	2.64	2.53	2.79	2.68	2.86	2.67	3.02	2.85	3.12	2.79
	38	2.07	1.99	2.25	2.16	2.60	2.50	2.76	2.65	2.81	2.65	2.91	2.79	3.00	2.75
	39	2.07	1.99	2.25	2.16	2.58	2.48	2.74	2.63	2.78	2.64	2.86	2.75	2.94	2.73
	41	2.07	1.99	2.24	2.15	2.50	2.40	2.63	2.52	2.66	2.55	2.73	2.62	2.80	2.69
	43	2.07	1.99	2.24	2.15	2.43	2.33	2.52	2.42	2.55	2.45	2.60	2.50	2.66	2.55

Air flow	Ambient air temp. DB	WB	Indoor air temp. 16 ℃CDB	18 ℃CDB	20 ℃CDB	22 ℃CDB	24 ℃CDB
	-19.8	-20	1.86	1.86	1.86	1.86	1.86
	-17.8	-18	1.98	1.98	1.98	1.98	1.98
	-15.7	-16	2.09	2.09	2.09	2.09	2.09
	-13.7	-14	2.21	2.21	2.21	2.21	2.21
	-11.7	-12	2.33	2.33	2.33	2.33	2.33
Hi	-9.6	-10	2.45	2.45	2.45	2.45	2.45
	-7.5	-8	2.60	2.60	2.60	2.60	2.60
12	-5.5	-6	2.75	2.75	2.75	2.75	2.75
(m^3/min)	-3.4	-4	2.85	2.84	2.84	2.81	2.78
	-1.3	-2	2.94	2.94	2.93	2.87	2.82
	0.8	0	3.10	3.06	3.02	2.91	2.80
	3.9	3	3.37	3.25	3.13	2.95	2.78
	7.0	6	3.68	3.44	3.20	2.98	2.75
	10.1	9	3.66	3.42	3.19	2.96	2.73
	13.2	12	3.63	3.40	3.17	2.94	2.70
	16.9	15.5	3.60	3.37	3.14	2.91	2.68

Air flow	Ambient air temp. (℃DB)	Indoor air temperature 21 ℃CDB 14 ℃CWB TC	SHC	23 ℃CDB 16 ℃CWB TC	SHC	26 ℃CDB 18 ℃CWB TC	SHC	27 ℃CDB 19 ℃CWB TC	SHC	28 ℃CDB 20 ℃CWB TC	SHC	31 ℃CDB 22 ℃CWB TC	SHC	33 ℃CDB 24 ℃CWB TC	SHC
	10			2.17	2.08	2.60	2.50	2.81	2.56	2.99	2.58	3.35	2.81	3.48	2.74
	12			2.17	2.08	2.60	2.50	2.81	2.56	2.98	2.58	3.34	2.80	3.46	2.74
	14			2.17	2.08	2.60	2.50	2.81	2.56	2.98	2.58	3.32	2.79	3.45	2.74
	16			2.17	2.08	2.60	2.50	2.81	2.56	2.98	2.58	3.31	2.79	3.43	2.73
	18			2.17	2.08	2.60	2.50	2.81	2.56	2.97	2.57	3.30	2.78	3.42	2.73
Me	20			2.17	2.08	2.60	2.50	2.81	2.56	2.97	2.57	3.29	2.78	3.40	2.72
	22			2.17	2.08	2.60	2.50	2.81	2.56	2.95	2.57	3.25	2.77	3.35	2.71
11	24			2.17	2.08	2.59	2.49	2.81	2.56	2.94	2.56	3.20	2.75	3.31	2.69
(m^3/min)	26			2.16	2.07	2.58	2.48	2.78	2.55	2.91	2.55	3.15	2.74	3.26	2.68
	28	1.96	1.88	2.16	2.07	2.57	2.47	2.76	2.54	2.87	2.53	3.10	2.72	3.21	2.67
	30	1.96	1.88	2.16	2.07	2.55	2.45	2.73	2.53	2.84	2.52	3.06	2.71	3.16	2.65
	32	1.96	1.88	2.15	2.06	2.53	2.43	2.70	2.52	2.80	2.51	3.01	2.68	3.11	2.63
	34	1.96	1.88	2.14	2.05	2.52	2.42	2.67	2.51	2.76	2.50	2.94	2.66	3.05	2.61
	35	1.96	1.88	2.14	2.05	2.52	2.42	2.65	2.49	2.74	2.49	2.91	2.65	3.01	2.60
	36	1.96	1.88	2.14	2.05	2.50	2.40	2.64	2.50	2.71	2.48	2.86	2.64	2.96	2.59
	38	1.96	1.88	2.13	2.04	2.46	2.36	2.61	2.49	2.66	2.46	2.76	2.61	2.84	2.55
	39	1.96	1.88	2.13	2.04	2.44	2.34	2.60	2.48	2.63	2.45	2.70	2.59	2.78	2.53
	41	1.96	1.88	2.12	2.04	2.37	2.28	2.49	2.39	2.52	2.41	2.58	2.48	2.65	2.49
	43	1.96	1.88	2.12	2.04	2.30	2.21	2.39	2.29	2.41	2.31	2.46	2.36	2.52	2.42

Air flow	Ambient air temp. DB	WB	Indoor air temp. 16 ℃CDB	18 ℃CDB	20 ℃CDB	22 ℃CDB	24 ℃CDB
	-19.8	-20	1.76	1.76	1.76	1.76	1.76
	-17.8	-18	1.88	1.88	1.88	1.88	1.88
	-15.7	-16	1.99	1.99	1.99	1.99	1.99
	-13.7	-14	2.10	2.10	2.10	2.10	2.10
	-11.7	-12	2.22	2.22	2.22	2.22	2.22
Me	-9.6	-10	2.33	2.33	2.33	2.33	2.33
	-7.5	-8	2.47	2.47	2.47	2.47	2.47
11	-5.5	-6	2.61	2.61	2.61	2.61	2.61
(m^3/min)	-3.4	-4	2.71	2.70	2.70	2.67	2.64
	-1.3	-2	2.80	2.79	2.78	2.73	2.68
	0.8	0	2.95	2.91	2.87	2.76	2.66
	3.9	3	3.20	3.09	2.97	2.80	2.64
	7.0	6	3.50	3.27	3.04	2.83	2.61
	10.1	9	3.47	3.25	3.03	2.81	2.59
	13.2	12	3.45	3.23	3.01	2.79	2.57
	16.9	15.5	3.42	3.20	2.98	2.76	2.54

Air flow	Ambient air temp. (℃DB)	Indoor air temperature 21 ℃CDB 14 ℃CWB TC	SHC	23 ℃CDB 16 ℃CWB TC	SHC	26 ℃CDB 18 ℃CWB TC	SHC	27 ℃CDB 19 ℃CWB TC	SHC	28 ℃CDB 20 ℃CWB TC	SHC	31 ℃CDB 22 ℃CWB TC	SHC	33 ℃CDB 24 ℃CWB TC	SHC
	10			2.04	1.96	2.44	2.34	2.64	2.40	2.81	2.42	3.15	2.62	3.27	2.57
	12			2.04	1.96	2.44	2.34	2.64	2.40	2.80	2.42	3.13	2.62	3.25	2.56
	14			2.04	1.96	2.44	2.34	2.64	2.40	2.80	2.42	3.12	2.61	3.24	2.56
	16			2.04	1.96	2.44	2.34	2.64	2.40	2.80	2.42	3.11	2.61	3.22	2.55
	18			2.04	1.96	2.44	2.34	2.64	2.40	2.79	2.41	3.10	2.60	3.21	2.55
Lo	20			2.04	1.96	2.44	2.34	2.64	2.40	2.79	2.41	3.09	2.60	3.20	2.55
	22			2.04	1.96	2.44	2.34	2.64	2.40	2.78	2.41	3.05	2.59	3.15	2.53
10	24			2.04	1.96	2.44	2.34	2.64	2.40	2.76	2.40	3.01	2.58	3.11	2.52
(m^3/min)	26			2.03	1.95	2.43	2.33	2.61	2.39	2.73	2.39	2.96	2.56	3.06	2.51
	28	1.84	1.77	2.03	1.95	2.42	2.32	2.59	2.38	2.70	2.38	2.92	2.55	3.01	2.49
	30	1.84	1.77	2.03	1.95	2.40	2.30	2.56	2.37	2.67	2.37	2.87	2.53	2.97	2.48
	32	1.84	1.77	2.02	1.94	2.38	2.28	2.54	2.37	2.64	2.36	2.83	2.52	2.92	2.46
	34	1.84	1.77	2.02	1.94	2.37	2.28	2.51	2.36	2.59	2.34	2.77	2.50	2.86	2.45
	35	1.84	1.77	2.01	1.93	2.37	2.28	2.49	2.34	2.57	2.34	2.74	2.49	2.83	2.44
	36	1.84	1.77	2.01	1.93	2.35	2.26	2.48	2.34	2.55	2.33	2.69	2.47	2.78	2.42
	38	1.84	1.77	2.00	1.92	2.31	2.22	2.45	2.33	2.50	2.31	2.59	2.44	2.67	2.39
	39	1.84	1.77	2.00	1.92	2.29	2.20	2.44	2.33	2.47	2.30	2.54	2.43	2.61	2.38
	41	1.84	1.77	1.99	1.91	2.23	2.14	2.34	2.25	2.37	2.26	2.43	2.33	2.49	2.34
	43	1.84	1.77	1.99	1.91	2.16	2.07	2.24	2.15	2.27	2.18	2.31	2.22	2.37	2.28

Air flow	Ambient air temp. DB	WB	Indoor air temp. 16 ℃CDB	18 ℃CDB	20 ℃CDB	22 ℃CDB	24 ℃CDB
	-19.8	-20	1.66	1.66	1.66	1.66	1.66
	-17.8	-18	1.77	1.77	1.77	1.77	1.77
	-15.7	-16	1.87	1.87	1.87	1.87	1.87
	-13.7	-14	1.98	1.98	1.98	1.98	1.98
	-11.7	-12	2.09	2.09	2.09	2.09	2.09
Lo	-9.6	-10	2.19	2.19	2.19	2.19	2.19
	-7.5	-8	2.33	2.33	2.33	2.33	2.33
10	-5.5	-6	2.46	2.46	2.46	2.46	2.46
(m^3/min)	-3.4	-4	2.55	2.54	2.54	2.51	2.49
	-1.3	-2	2.63	2.62	2.62	2.57	2.52
	0.8	0	2.77	2.73	2.70	2.60	2.50
	3.9	3	3.01	2.90	2.80	2.64	2.48
	7.0	6	3.29	3.07	2.86	2.66	2.46
	10.1	9	3.27	3.06	2.85	2.64	2.44
	13.2	12	3.25	3.04	2.83	2.62	2.42
	16.9	15.5	3.22	3.01	2.81	2.60	2.39

Note(1) This data shows average statuses out of those possible to occur in the system control.
(Depending on controls, there may be ranges where the operation is not conducted continuously.)
(2) Symbols are as follows
TC :Total cooling capacity(kW)
SHC :Sensible heat capacity(kW)

Cool mode	Uhi	Hi	Me	Lo
Air flow	12.00	12	11	10
TC	2.80	2.80	2.65	2.49
SHF	0.96	0.96	0.94	0.94

Heat mode	Uhi	Hi	Me	Lo
Air flow	12	12	11	10
Heating capacity	3.20	3.20	3.04	2.86

Model **FDFU45KXE6** Cool Mode

Air flow	Ambient air temp. (°CDB)	Indoor air temperature 21 °CDB 14 °CWB TC	21 °CDB 14 °CWB SHC	23 °CDB 16 °CWB TC	23 °CDB 16 °CWB SHC	26 °CDB 18 °CWB TC	26 °CDB 18 °CWB SHC	27 °CDB 19 °CWB TC	27 °CDB 19 °CWB SHC	28 °CDB 20 °CWB TC	28 °CDB 20 °CWB SHC	31 °CDB 22 °CWB TC	31 °CDB 22 °CWB SHC	33 °CDB 24 °CWB TC	33 °CDB 24 °CWB SHC
Uhi	10			3.69	3.35	4.41	3.79	4.77	3.86	5.07	3.90	5.68	4.22	5.90	4.13
	12			3.69	3.35	4.41	3.79	4.77	3.86	5.07	3.90	5.66	4.22	5.88	4.12
	14			3.69	3.35	4.41	3.79	4.77	3.86	5.06	3.89	5.64	4.21	5.85	4.11
	16			3.69	3.35	4.41	3.79	4.77	3.86	5.05	3.89	5.62	4.20	5.83	4.11
	18			3.69	3.35	4.41	3.79	4.77	3.86	5.05	3.89	5.60	4.19	5.80	4.10
	20			3.69	3.35	4.41	3.79	4.77	3.86	5.04	3.88	5.58	4.19	5.78	4.09
	22			3.68	3.35	4.41	3.79	4.77	3.86	5.02	3.88	5.51	4.16	5.70	4.06
14	24			3.68	3.35	4.41	3.79	4.77	3.86	4.99	3.87	5.44	4.14	5.62	4.04
(m³/min)	26			3.68	3.35	4.39	3.78	4.73	3.84	4.93	3.84	5.35	4.11	5.53	4.01
	28	3.33	3.20	3.67	3.34	4.37	3.78	4.68	3.82	4.88	3.82	5.27	4.07	5.44	3.97
	30	3.33	3.20	3.66	3.34	4.33	3.76	4.64	3.81	4.82	3.80	5.19	4.04	5.36	3.95
	32	3.33	3.20	3.65	3.33	4.30	3.75	4.59	3.79	4.76	3.78	5.11	4.02	5.28	3.92
	34	3.33	3.20	3.64	3.33	4.28	3.74	4.53	3.77	4.69	3.75	5.00	3.98	5.17	3.89
	35	3.33	3.20	3.64	3.33	4.28	3.74	4.50	3.74	4.65	3.74	4.95	3.96	5.12	3.87
	36	3.33	3.20	3.63	3.33	4.24	3.72	4.48	3.75	4.60	3.72	4.86	3.93	5.02	3.84
	38	3.33	3.20	3.62	3.32	4.18	3.70	4.43	3.73	4.52	3.69	4.68	3.87	4.82	3.78
	39	3.33	3.20	3.62	3.32	4.15	3.69	4.41	3.72	4.47	3.67	4.59	3.84	4.72	3.75
	41	3.33	3.20	3.61	3.32	4.02	3.64	4.23	3.65	4.28	3.60	4.39	3.78	4.50	3.68
	43	3.33	3.20	3.59	3.31	3.90	3.58	4.05	3.59	4.09	3.54	4.18	3.71	4.28	3.61

Heat Mode

Air flow	Ambient air temp. DB	Ambient air temp. WB	Indoor air temp. 16 °CDB	18 °CDB	20 °CDB	22 °CDB	24 °CDB
Uhi	-19.8	-20	2.90	2.90	2.90	2.90	2.90
	-17.8	-18	3.09	3.09	3.09	3.09	3.09
	-15.7	-16	3.27	3.27	3.27	3.27	3.27
	-13.7	-14	3.46	3.46	3.46	3.46	3.46
	-11.7	-12	3.65	3.65	3.65	3.65	3.65
	-9.6	-10	3.83	3.83	3.83	3.83	3.83
	-7.5	-8	4.07	4.07	4.07	4.07	4.07
14	-5.5	-6	4.30	4.30	4.30	4.30	4.30
(m³/min)	-3.4	-4	4.45	4.44	4.44	4.39	4.35
	-1.3	-2	4.60	4.59	4.58	4.49	4.40
	0.8	0	4.85	4.78	4.71	4.54	4.38
	3.9	3	5.26	5.08	4.89	4.61	4.34
	7.0	6	5.75	5.38	5.00	4.65	4.30
	10.1	9	5.71	5.35	4.98	4.62	4.26
	13.2	12	5.68	5.31	4.95	4.59	4.23
	16.9	15.5	5.63	5.27	4.91	4.54	4.18

Air flow	Ambient air temp. (°CDB)	Indoor air temperature 21 °CDB 14 °CWB TC	21 °CDB 14 °CWB SHC	23 °CDB 16 °CWB TC	23 °CDB 16 °CWB SHC	26 °CDB 18 °CWB TC	26 °CDB 18 °CWB SHC	27 °CDB 19 °CWB TC	27 °CDB 19 °CWB SHC	28 °CDB 20 °CWB TC	28 °CDB 20 °CWB SHC	31 °CDB 22 °CWB TC	31 °CDB 22 °CWB SHC	33 °CDB 24 °CWB TC	33 °CDB 24 °CWB SHC
Hi	10			3.69	3.35	4.41	3.79	4.77	3.86	5.07	3.90	5.68	4.22	5.90	4.13
	12			3.69	3.35	4.41	3.79	4.77	3.86	5.07	3.90	5.66	4.22	5.88	4.12
	14			3.69	3.35	4.41	3.79	4.77	3.86	5.06	3.89	5.64	4.21	5.85	4.11
	16			3.69	3.35	4.41	3.79	4.77	3.86	5.05	3.89	5.62	4.20	5.83	4.11
	18			3.69	3.35	4.41	3.79	4.77	3.86	5.05	3.89	5.60	4.19	5.80	4.10
	20			3.69	3.35	4.41	3.79	4.77	3.86	5.04	3.88	5.58	4.19	5.78	4.09
	22			3.68	3.35	4.41	3.79	4.77	3.86	5.02	3.88	5.51	4.16	5.70	4.06
14	24			3.68	3.35	4.41	3.79	4.77	3.86	4.99	3.87	5.44	4.14	5.62	4.04
(m³/min)	26			3.68	3.35	4.39	3.78	4.73	3.84	4.93	3.84	5.35	4.11	5.53	4.01
	28	3.33	3.20	3.67	3.34	4.37	3.78	4.68	3.82	4.88	3.82	5.27	4.07	5.44	3.97
	30	3.33	3.20	3.66	3.34	4.33	3.76	4.64	3.81	4.82	3.80	5.19	4.04	5.36	3.95
	32	3.33	3.20	3.65	3.33	4.30	3.75	4.59	3.79	4.76	3.78	5.11	4.02	5.28	3.92
	34	3.33	3.20	3.64	3.33	4.28	3.74	4.53	3.77	4.69	3.75	5.00	3.98	5.17	3.89
	35	3.33	3.20	3.64	3.33	4.28	3.74	4.50	3.74	4.65	3.74	4.95	3.96	5.12	3.87
	36	3.33	3.20	3.63	3.33	4.24	3.72	4.48	3.75	4.60	3.72	4.86	3.93	5.02	3.84
	38	3.33	3.20	3.62	3.32	4.18	3.70	4.43	3.73	4.52	3.69	4.68	3.87	4.82	3.78
	39	3.33	3.20	3.62	3.32	4.15	3.69	4.41	3.72	4.47	3.67	4.59	3.84	4.72	3.75
	41	3.33	3.20	3.61	3.32	4.02	3.64	4.23	3.65	4.28	3.60	4.39	3.78	4.50	3.68
	43	3.33	3.20	3.59	3.31	3.90	3.58	4.05	3.59	4.09	3.54	4.18	3.71	4.28	3.61

Air flow	Ambient air temp. DB	Ambient air temp. WB	Indoor air temp. 16 °CDB	18 °CDB	20 °CDB	22 °CDB	24 °CDB
Hi	-19.8	-20	2.90	2.90	2.90	2.90	2.90
	-17.8	-18	3.09	3.09	3.09	3.09	3.09
	-15.7	-16	3.27	3.27	3.27	3.27	3.27
	-13.7	-14	3.46	3.46	3.46	3.46	3.46
	-11.7	-12	3.65	3.65	3.65	3.65	3.65
	-9.6	-10	3.83	3.83	3.83	3.83	3.83
	-7.5	-8	4.07	4.07	4.07	4.07	4.07
14	-5.5	-6	4.30	4.30	4.30	4.30	4.30
(m³/min)	-3.4	-4	4.45	4.44	4.44	4.39	4.35
	-1.3	-2	4.60	4.59	4.58	4.49	4.40
	0.8	0	4.85	4.78	4.71	4.54	4.38
	3.9	3	5.26	5.08	4.89	4.61	4.34
	7.0	6	5.75	5.38	5.00	4.65	4.30
	10.1	9	5.71	5.35	4.98	4.62	4.26
	13.2	12	5.68	5.31	4.95	4.59	4.23
	16.9	15.5	5.63	5.27	4.91	4.54	4.18

Air flow	Ambient air temp. (°CDB)	Indoor air temperature 21 °CDB 14 °CWB TC	21 °CDB 14 °CWB SHC	23 °CDB 16 °CWB TC	23 °CDB 16 °CWB SHC	26 °CDB 18 °CWB TC	26 °CDB 18 °CWB SHC	27 °CDB 19 °CWB TC	27 °CDB 19 °CWB SHC	28 °CDB 20 °CWB TC	28 °CDB 20 °CWB SHC	31 °CDB 22 °CWB TC	31 °CDB 22 °CWB SHC	33 °CDB 24 °CWB TC	33 °CDB 24 °CWB SHC
Me	10			3.31	2.93	3.96	3.32	4.28	3.38	4.56	3.43	5.10	3.70	5.30	3.62
	12			3.31	2.93	3.96	3.32	4.28	3.38	4.55	3.42	5.09	3.70	5.28	3.61
	14			3.31	2.93	3.96	3.32	4.28	3.38	4.54	3.42	5.07	3.69	5.25	3.60
	16			3.31	2.93	3.96	3.32	4.28	3.38	4.54	3.42	5.05	3.68	5.23	3.59
	18			3.31	2.93	3.96	3.32	4.28	3.38	4.53	3.41	5.03	3.68	5.21	3.59
	20			3.31	2.93	3.96	3.32	4.28	3.38	4.53	3.41	5.01	3.67	5.18	3.58
	22			3.31	2.93	3.96	3.32	4.28	3.38	4.50	3.40	4.95	3.65	5.11	3.56
12	24			3.30	2.93	3.96	3.32	4.28	3.38	4.48	3.40	4.88	3.62	5.04	3.53
(m³/min)	26			3.30	2.93	3.94	3.31	4.24	3.37	4.43	3.38	4.81	3.60	4.97	3.51
	28	2.99	2.87	3.30	2.93	3.92	3.31	4.20	3.35	4.38	3.36	4.73	3.57	4.89	3.48
	30	2.99	2.87	3.29	2.92	3.89	3.29	4.16	3.34	4.33	3.33	4.66	3.55	4.82	3.46
	32	2.99	2.87	3.28	2.92	3.86	3.28	4.12	3.32	4.28	3.31	4.59	3.52	4.74	3.44
	34	2.99	2.87	3.27	2.92	3.84	3.27	4.07	3.30	4.21	3.29	4.49	3.48	4.64	3.40
	35	2.99	2.87	3.26	2.91	3.84	3.27	4.04	3.27	4.17	3.27	4.44	3.46	4.60	3.39
	36	2.99	2.87	3.26	2.91	3.81	3.26	4.02	3.28	4.13	3.26	4.36	3.44	4.51	3.36
	38	2.99	2.87	3.25	2.91	3.75	3.24	3.98	3.27	4.05	3.23	4.20	3.38	4.33	3.30
	39	2.99	2.87	3.25	2.91	3.72	3.23	3.96	3.26	4.01	3.21	4.12	3.36	4.24	3.27
	41	2.99	2.87	3.24	2.90	3.61	3.18	3.80	3.20	3.84	3.15	3.94	3.30	4.04	3.21
	43	2.99	2.87	3.23	2.90	3.50	3.14	3.64	3.14	3.68	3.09	3.76	3.24	3.84	3.15

Air flow	Ambient air temp. DB	Ambient air temp. WB	Indoor air temp. 16 °CDB	18 °CDB	20 °CDB	22 °CDB	24 °CDB
Me	-19.8	-20	2.60	2.60	2.60	2.60	2.60
	-17.8	-18	2.77	2.77	2.77	2.77	2.77
	-15.7	-16	2.93	2.93	2.93	2.93	2.93
	-13.7	-14	3.10	3.10	3.10	3.10	3.10
	-11.7	-12	3.27	3.27	3.27	3.27	3.27
	-9.6	-10	3.43	3.43	3.43	3.43	3.43
	-7.5	-8	3.64	3.64	3.64	3.64	3.64
12	-5.5	-6	3.85	3.85	3.85	3.85	3.85
(m³/min)	-3.4	-4	3.99	3.98	3.98	3.94	3.90
	-1.3	-2	4.12	4.11	4.10	4.02	3.94
	0.8	0	4.35	4.28	4.22	4.07	3.92
	3.9	3	4.72	4.55	4.38	4.13	3.89
	7.0	6	5.15	4.82	4.48	4.17	3.85
	10.1	9	5.12	4.79	4.46	4.14	3.82
	13.2	12	5.08	4.76	4.44	4.11	3.79
	16.9	15.5	5.05	4.72	4.40	4.07	3.75

Air flow	Ambient air temp. (°CDB)	Indoor air temperature 21 °CDB 14 °CWB TC	21 °CDB 14 °CWB SHC	23 °CDB 16 °CWB TC	23 °CDB 16 °CWB SHC	26 °CDB 18 °CWB TC	26 °CDB 18 °CWB SHC	27 °CDB 19 °CWB TC	27 °CDB 19 °CWB SHC	28 °CDB 20 °CWB TC	28 °CDB 20 °CWB SHC	31 °CDB 22 °CWB TC	31 °CDB 22 °CWB SHC	33 °CDB 24 °CWB TC	33 °CDB 24 °CWB SHC
Lo	10			2.89	2.53	3.46	2.87	3.74	2.92	3.98	2.95	4.46	3.19	4.63	3.12
	12			2.89	2.53	3.46	2.87	3.74	2.92	3.98	2.95	4.44	3.19	4.61	3.11
	14			2.89	2.53	3.46	2.87	3.74	2.92	3.97	2.95	4.43	3.18	4.59	3.10
	16			2.89	2.53	3.46	2.87	3.74	2.92	3.96	2.94	4.41	3.17	4.57	3.10
	18			2.89	2.53	3.46	2.87	3.74	2.92	3.96	2.94	4.39	3.17	4.55	3.09
	20			2.89	2.53	3.46	2.87	3.74	2.92	3.95	2.94	4.38	3.16	4.53	3.08
	22			2.89	2.53	3.46	2.87	3.74	2.92	3.94	2.94	4.32	3.14	4.47	3.06
10	24			2.89	2.53	3.46	2.87	3.74	2.92	3.92	2.93	4.27	3.12	4.41	3.04
(m³/min)	26			2.88	2.53	3.44	2.86	3.71	2.91	3.87	2.91	4.20	3.10	4.34	3.02
	28	2.61	2.50	2.88	2.53	3.42	2.85	3.67	2.89	3.83	2.89	4.13	3.07	4.27	3.00
	30	2.61	2.50	2.87	2.52	3.40	2.84	3.64	2.88	3.78	2.87	4.07	3.05	4.21	2.98
	32	2.61	2.50	2.87	2.52	3.37	2.83	3.60	2.86	3.74	2.86	4.01	3.03	4.14	2.96
	34	2.61	2.50	2.86	2.52	3.36	2.82	3.55	2.84	3.68	2.84	3.92	3.00	4.06	2.93
	35	2.61	2.50	2.85	2.51	3.35	2.82	3.53	2.82	3.65	2.83	3.88	2.99	4.02	2.92
	36	2.61	2.50	2.85	2.51	3.33	2.81	3.51	2.83	3.61	2.81	3.81	2.96	3.94	2.89
	38	2.61	2.50	2.84	2.51	3.28	2.79	3.48	2.82	3.54	2.78	3.67	2.91	3.78	2.84
	39	2.61	2.50	2.84	2.51	3.25	2.78	3.46	2.81	3.51	2.77	3.60	2.89	3.70	2.82
	41	2.61	2.50	2.83	2.51	3.15	2.74	3.32	2.75	3.36	2.72	3.44	2.83	3.53	2.74
	43	2.61	2.50	2.82	2.50	3.06	2.70	3.18	2.70	3.21	2.66	3.28	2.78	3.36	2.69

Air flow	Ambient air temp. DB	Ambient air temp. WB	Indoor air temp. 16 °CDB	18 °CDB	20 °CDB	22 °CDB	24 °CDB
Lo	-19.8	-20	2.27	2.27	2.27	2.27	2.27
	-17.8	-18	2.41	2.41	2.41	2.41	2.41
	-15.7	-16	2.56	2.56	2.56	2.56	2.56
	-13.7	-14	2.71	2.71	2.71	2.71	2.71
	-11.7	-12	2.85	2.85	2.85	2.85	2.85
	-9.6	-10	3.00	3.00	3.00	3.00	3.00
	-7.5	-8	3.18	3.18	3.18	3.18	3.18
10	-5.5	-6	3.36	3.36	3.36	3.36	3.36
(m³/min)	-3.4	-4	3.48	3.48	3.47	3.44	3.40
	-1.3	-2	3.60	3.59	3.58	3.51	3.44
	0.8	0	3.79	3.74	3.69	3.55	3.42
	3.9	3	4.12	3.97	3.82	3.61	3.39
	7.0	6	4.50	4.20	3.91	3.64	3.36
	10.1	9	4.47	4.18	3.90	3.61	3.33
	13.2	12	4.44	4.15	3.87	3.59	3.30
	16.9	15.5	4.40	4.12	3.84	3.55	3.27

Note(1) This data shows average statuses out of those possible to occur in the system control.
(Depending on controls, there may be ranges where the operation is not conducted continuously.)
(2) Symbols are as follows
TC :Total cooling capacity(kW)
SHC :Sensible heat capacity(kW)

Cool mode	Uhi	Hi	Me	Lo
Air flow	14.00	14	12	10
TC	4.50	4.50	4.04	3.53
SHF	0.83	0.83	0.81	0.80

Heat mode	Uhi	Hi	Me	Lo
Air flow	14	14	12	10
Heating capacity	5.00	5.00	4.48	3.91

Model **FDFU56KXE6** Cool Mode

Air flow	Ambient air temp. (℃CDB)	Indoor air temperature 21 ℃CDB 14 ℃CWB TC	SHC	23 ℃CDB 16 ℃CWB TC	SHC	26 ℃CDB 18 ℃CWB TC	SHC	27 ℃CDB 19 ℃CWB TC	SHC	28 ℃CDB 20 ℃CWB TC	SHC	31 ℃CDB 22 ℃CWB TC	SHC	33 ℃CDB 24 ℃CWB TC	SHC
Uhi	10			4.59	3.75	5.49	4.24	5.94	4.33	6.32	4.39	7.07	4.74	7.35	4.62
	12			4.59	3.75	5.49	4.24	5.94	4.33	6.31	4.38	7.05	4.73	7.31	4.61
	14			4.59	3.75	5.49	4.24	5.94	4.33	6.30	4.38	7.02	4.72	7.28	4.60
	16			4.59	3.75	5.49	4.24	5.94	4.33	6.29	4.37	7.00	4.71	7.25	4.59
	18			4.59	3.75	5.49	4.24	5.94	4.33	6.28	4.37	6.97	4.70	7.22	4.58
	20			4.59	3.75	5.49	4.24	5.94	4.33	6.27	4.37	6.95	4.70	7.19	4.56
	22			4.58	3.74	5.49	4.24	5.94	4.33	6.24	4.35	6.86	4.66	7.09	4.53
14 (m³/min)	24			4.58	3.74	5.48	4.24	5.94	4.33	6.21	4.34	6.77	4.62	6.99	4.49
	26			4.57	3.74	5.46	4.23	5.88	4.31	6.14	4.31	6.66	4.58	6.88	4.46
	28	4.14	3.70	4.57	3.74	5.43	4.21	5.82	4.28	6.07	4.29	6.56	4.54	6.78	4.42
	30	4.14	3.70	4.56	3.74	5.39	4.20	5.77	4.26	6.00	4.26	6.46	4.51	6.67	4.39
	32	4.14	3.70	4.55	3.73	5.35	4.18	5.71	4.24	5.93	4.23	6.36	4.47	6.57	4.35
	34	4.14	3.70	4.53	3.72	5.33	4.17	5.64	4.21	5.83	4.19	6.22	4.42	6.44	4.30
	35	4.14	3.70	4.52	3.72	5.32	4.17	5.60	4.20	5.79	4.18	6.16	4.39	6.37	4.28
	36	4.14	3.70	4.52	3.72	5.28	4.15	5.57	4.18	5.73	4.15	6.05	4.35	6.25	4.24
	38	4.14	3.70	4.51	3.71	5.20	4.12	5.52	4.16	5.62	4.11	5.82	4.27	6.00	4.16
	39	4.14	3.70	4.50	3.71	5.16	4.10	5.49	4.15	5.56	4.09	5.71	4.23	5.87	4.12
	41	4.14	3.70	4.49	3.70	5.00	4.04	5.26	4.06	5.33	4.00	5.46	4.15	5.60	4.03
	43	4.14	3.70	4.47	3.70	4.85	3.97	5.04	3.97	5.10	3.91	5.21	4.05	5.32	3.94

Heat Mode

Air flow	Ambient air temp. DB	WB	Indoor air temp. 16 ℃CDB	18 ℃CDB	20 ℃CDB	22 ℃CDB	24 ℃CDB
Uhi	-19.8	-20	3.65	3.65	3.65	3.65	3.65
	-17.8	-18	3.89	3.89	3.89	3.89	3.89
	-15.7	-16	4.12	4.12	4.12	4.12	4.12
	-13.7	-14	4.36	4.36	4.36	4.36	4.36
	-11.7	-12	4.59	4.59	4.59	4.59	4.59
	-9.6	-10	4.83	4.83	4.83	4.83	4.83
	-7.5	-8	5.12	5.12	5.12	5.12	5.12
14 (m³/min)	-5.5	-6	5.42	5.42	5.42	5.42	5.42
	-3.4	-4	5.61	5.60	5.59	5.54	5.48
	-1.3	-2	5.80	5.78	5.76	5.65	5.54
	0.8	0	6.11	6.02	5.94	5.73	5.51
	3.9	3	6.63	6.39	6.16	5.81	5.47
	7.0	6	7.25	6.77	6.30	5.86	5.42
	10.1	9	7.20	6.74	6.28	5.82	5.37
	13.2	12	7.15	6.69	6.24	5.78	5.32
	16.9	15.5	7.10	6.64	6.18	5.73	5.27

Air flow	Ambient air temp. (℃CDB)	Indoor air temperature 21 ℃CDB 14 ℃CWB TC	SHC	23 ℃CDB 16 ℃CWB TC	SHC	26 ℃CDB 18 ℃CWB TC	SHC	27 ℃CDB 19 ℃CWB TC	SHC	28 ℃CDB 20 ℃CWB TC	SHC	31 ℃CDB 22 ℃CWB TC	SHC	33 ℃CDB 24 ℃CWB TC	SHC
Hi	10			4.59	3.77	5.49	4.26	5.94	4.35	6.32	4.41	7.07	4.76	7.35	4.64
	12			4.59	3.77	5.49	4.26	5.94	4.35	6.31	4.41	7.05	4.75	7.31	4.63
	14			4.59	3.77	5.49	4.26	5.94	4.35	6.30	4.41	7.02	4.74	7.28	4.62
	16			4.59	3.77	5.49	4.26	5.94	4.35	6.29	4.40	7.00	4.73	7.25	4.61
	18			4.59	3.77	5.49	4.26	5.94	4.35	6.28	4.40	6.97	4.72	7.22	4.60
	20			4.59	3.77	5.49	4.26	5.94	4.35	6.27	4.39	6.95	4.71	7.19	4.59
	22			4.58	3.76	5.49	4.26	5.94	4.35	6.24	4.38	6.86	4.68	7.09	4.55
14 (m³/min)	24			4.58	3.76	5.48	4.26	5.94	4.35	6.21	4.37	6.77	4.65	6.99	4.52
	26			4.57	3.76	5.46	4.25	5.88	4.33	6.14	4.34	6.66	4.61	6.88	4.48
	28	4.14	3.71	4.57	3.76	5.43	4.23	5.82	4.30	6.07	4.31	6.56	4.57	6.78	4.45
	30	4.14	3.71	4.56	3.75	5.39	4.22	5.77	4.28	6.00	4.28	6.46	4.53	6.67	4.41
	32	4.14	3.71	4.55	3.75	5.35	4.20	5.71	4.26	5.93	4.25	6.36	4.49	6.57	4.37
	34	4.14	3.71	4.53	3.74	5.33	4.19	5.64	4.23	5.83	4.21	6.22	4.44	6.44	4.33
	35	4.14	3.71	4.52	3.73	5.32	4.19	5.60	4.20	5.79	4.20	6.16	4.42	6.37	4.30
	36	4.14	3.71	4.52	3.73	5.28	4.17	5.57	4.20	5.73	4.17	6.05	4.38	6.25	4.26
	38	4.14	3.71	4.51	3.73	5.20	4.14	5.52	4.18	5.62	4.13	5.82	4.29	6.00	4.18
	39	4.14	3.71	4.50	3.72	5.16	4.12	5.49	4.17	5.56	4.11	5.71	4.26	5.87	4.14
	41	4.14	3.71	4.49	3.72	5.00	4.06	5.26	4.08	5.33	4.02	5.46	4.17	5.60	4.05
	43	4.14	3.71	4.47	3.71	4.85	3.99	5.04	3.99	5.10	3.93	5.21	4.08	5.32	3.96

Air flow	Ambient air temp. DB	WB	Indoor air temp. 16 ℃CDB	18 ℃CDB	20 ℃CDB	22 ℃CDB	24 ℃CDB
Hi	-19.8	-20	3.65	3.65	3.65	3.65	3.65
	-17.8	-18	3.89	3.89	3.89	3.89	3.89
	-15.7	-16	4.12	4.12	4.12	4.12	4.12
	-13.7	-14	4.36	4.36	4.36	4.36	4.36
	-11.7	-12	4.59	4.59	4.59	4.59	4.59
	-9.6	-10	4.83	4.83	4.83	4.83	4.83
	-7.5	-8	5.12	5.12	5.12	5.12	5.12
14 (m³/min)	-5.5	-6	5.42	5.42	5.42	5.42	5.42
	-3.4	-4	5.61	5.60	5.59	5.54	5.48
	-1.3	-2	5.80	5.78	5.76	5.65	5.54
	0.8	0	6.11	6.02	5.94	5.73	5.51
	3.9	3	6.63	6.39	6.16	5.81	5.47
	7.0	6	7.25	6.77	6.30	5.86	5.42
	10.1	9	7.20	6.74	6.28	5.82	5.37
	13.2	12	7.15	6.69	6.24	5.78	5.32
	16.9	15.5	7.10	6.64	6.18	5.73	5.27

Air flow	Ambient air temp. (℃CDB)	Indoor air temperature 21 ℃CDB 14 ℃CWB TC	SHC	23 ℃CDB 16 ℃CWB TC	SHC	26 ℃CDB 18 ℃CWB TC	SHC	27 ℃CDB 19 ℃CWB TC	SHC	28 ℃CDB 20 ℃CWB TC	SHC	31 ℃CDB 22 ℃CWB TC	SHC	33 ℃CDB 24 ℃CWB TC	SHC
Me	10			4.08	3.31	4.88	3.74	5.28	3.83	5.62	3.88	6.29	4.19	6.53	4.08
	12			4.08	3.31	4.88	3.74	5.28	3.83	5.61	3.87	6.27	4.18	6.50	4.07
	14			4.08	3.31	4.88	3.74	5.28	3.83	5.60	3.87	6.25	4.17	6.48	4.06
	16			4.08	3.31	4.88	3.74	5.28	3.83	5.59	3.87	6.22	4.16	6.45	4.05
	18			4.08	3.31	4.88	3.74	5.28	3.83	5.59	3.87	6.20	4.15	6.42	4.04
	20			4.08	3.31	4.88	3.74	5.28	3.83	5.58	3.86	6.18	4.15	6.39	4.03
	22			4.08	3.31	4.88	3.74	5.28	3.83	5.55	3.85	6.10	4.12	6.30	4.00
12 (m³/min)	24			4.07	3.31	4.88	3.74	5.28	3.83	5.53	3.84	6.02	4.08	6.22	3.97
	26			4.07	3.31	4.85	3.73	5.23	3.81	5.46	3.81	5.93	4.05	6.12	3.93
	28	3.69	3.26	4.06	3.30	4.83	3.72	5.18	3.79	5.40	3.79	5.83	4.01	6.03	3.90
	30	3.69	3.26	4.05	3.30	4.79	3.70	5.13	3.76	5.33	3.76	5.74	3.97	5.94	3.87
	32	3.69	3.26	4.04	3.29	4.76	3.69	5.08	3.74	5.27	3.74	5.65	3.94	5.85	3.84
	34	3.69	3.26	4.03	3.29	4.74	3.68	5.01	3.71	5.19	3.70	5.53	3.90	5.72	3.79
	35	3.69	3.26	4.02	3.28	4.73	3.68	4.98	3.69	5.14	3.69	5.47	3.87	5.66	3.77
	36	3.69	3.26	4.02	3.28	4.70	3.67	4.96	3.69	5.10	3.67	5.38	3.84	5.55	3.74
	38	3.69	3.26	4.01	3.28	4.62	3.63	4.91	3.67	5.00	3.63	5.18	3.77	5.33	3.67
	39	3.69	3.26	4.00	3.28	4.59	3.62	4.88	3.66	4.95	3.61	5.08	3.73	5.22	3.63
	41	3.69	3.26	3.99	3.27	4.45	3.56	4.68	3.58	4.74	3.53	4.86	3.65	4.98	3.55
	43	3.69	3.26	3.98	3.27	4.31	3.50	4.48	3.50	4.53	3.45	4.63	3.57	4.73	3.47

Air flow	Ambient air temp. DB	WB	Indoor air temp. 16 ℃CDB	18 ℃CDB	20 ℃CDB	22 ℃CDB	24 ℃CDB
Me	-19.8	-20	3.28	3.28	3.28	3.28	3.28
	-17.8	-18	3.49	3.49	3.49	3.49	3.49
	-15.7	-16	3.70	3.70	3.70	3.70	3.70
	-13.7	-14	3.91	3.91	3.91	3.91	3.91
	-11.7	-12	4.12	4.12	4.12	4.12	4.12
	-9.6	-10	4.33	4.33	4.33	4.33	4.33
	-7.5	-8	4.60	4.60	4.60	4.60	4.60
12 (m³/min)	-5.5	-6	4.86	4.86	4.86	4.86	4.86
	-3.4	-4	5.03	5.02	5.01	4.96	4.92
	-1.3	-2	5.20	5.18	5.17	5.07	4.97
	0.8	0	5.48	5.40	5.33	5.13	4.94
	3.9	3	5.95	5.73	5.52	5.21	4.90
	7.0	6	6.50	6.07	5.65	5.25	4.86
	10.1	9	6.46	6.04	5.63	5.22	4.82
	13.2	12	6.41	6.00	5.59	5.18	4.77
	16.9	15.5	6.36	5.95	5.54	5.13	4.72

Air flow	Ambient air temp. (℃CDB)	Indoor air temperature 21 ℃CDB 14 ℃CWB TC	SHC	23 ℃CDB 16 ℃CWB TC	SHC	26 ℃CDB 18 ℃CWB TC	SHC	27 ℃CDB 19 ℃CWB TC	SHC	28 ℃CDB 20 ℃CWB TC	SHC	31 ℃CDB 22 ℃CWB TC	SHC	33 ℃CDB 24 ℃CWB TC	SHC
Lo	10			3.53	2.82	4.22	3.18	4.57	3.26	4.86	3.30	5.44	3.57	5.65	3.47
	12			3.53	2.82	4.22	3.18	4.57	3.26	4.85	3.30	5.42	3.56	5.63	3.47
	14			3.53	2.82	4.22	3.18	4.57	3.26	4.85	3.30	5.41	3.56	5.60	3.46
	16			3.53	2.82	4.22	3.18	4.57	3.26	4.84	3.30	5.39	3.55	5.58	3.45
	18			3.53	2.82	4.22	3.18	4.57	3.26	4.83	3.29	5.37	3.54	5.56	3.44
	20			3.53	2.82	4.22	3.18	4.57	3.26	4.83	3.29	5.35	3.53	5.53	3.43
	22			3.53	2.82	4.22	3.18	4.57	3.26	4.81	3.28	5.28	3.51	5.46	3.41
10 (m³/min)	24			3.52	2.81	4.22	3.18	4.57	3.26	4.78	3.27	5.21	3.48	5.38	3.38
	26			3.52	2.81	4.20	3.18	4.53	3.24	4.73	3.25	5.13	3.45	5.30	3.35
	28	3.19	2.77	3.52	2.81	4.18	3.17	4.48	3.22	4.67	3.23	5.05	3.42	5.22	3.32
	30	3.19	2.77	3.51	2.81	4.15	3.15	4.44	3.21	4.62	3.21	4.97	3.38	5.14	3.29
	32	3.19	2.77	3.50	2.80	4.12	3.14	4.40	3.19	4.56	3.18	4.89	3.35	5.06	3.26
	34	3.19	2.77	3.49	2.80	4.10	3.13	4.34	3.16	4.49	3.15	4.79	3.31	4.95	3.22
	35	3.19	2.77	3.48	2.79	4.09	3.13	4.31	3.15	4.45	3.14	4.74	3.30	4.90	3.21
	36	3.19	2.77	3.48	2.79	4.06	3.12	4.29	3.14	4.41	3.12	4.65	3.26	4.81	3.18
	38	3.19	2.77	3.47	2.79	4.00	3.09	4.25	3.13	4.32	3.09	4.48	3.20	4.62	3.11
	39	3.19	2.77	3.47	2.79	3.97	3.08	4.22	3.11	4.28	3.07	4.40	3.17	4.52	3.08
	41	3.19	2.77	3.45	2.78	3.85	3.03	4.05	3.04	4.10	3.00	4.20	3.10	4.31	3.01
	43	3.19	2.77	3.44	2.78	3.73	2.98	3.88	2.98	3.92	2.93	4.01	3.03	4.10	2.94

Air flow	Ambient air temp. DB	WB	Indoor air temp. 16 ℃CDB	18 ℃CDB	20 ℃CDB	22 ℃CDB	24 ℃CDB
Lo	-19.8	-20	2.86	2.86	2.86	2.86	2.86
	-17.8	-18	3.04	3.04	3.04	3.04	3.04
	-15.7	-16	3.23	3.23	3.23	3.23	3.23
	-13.7	-14	3.41	3.41	3.41	3.41	3.41
	-11.7	-12	3.60	3.60	3.60	3.60	3.60
	-9.6	-10	3.78	3.78	3.78	3.78	3.78
	-7.5	-8	4.01	4.01	4.01	4.01	4.01
10 (m³/min)	-5.5	-6	4.24	4.24	4.24	4.24	4.24
	-3.4	-4	4.39	4.38	4.38	4.33	4.29
	-1.3	-2	4.54	4.52	4.51	4.42	4.34
	0.8	0	4.78	4.71	4.65	4.48	4.31
	3.9	3	5.19	5.00	4.82	4.55	4.28
	7.0	6	5.67	5.30	4.93	4.58	4.24
	10.1	9	5.63	5.27	4.91	4.56	4.20
	13.2	12	5.60	5.24	4.88	4.52	4.17
	16.9	15.5	5.55	5.19	4.84	4.48	4.12

Note(1) This data shows average statuses out of those possible to occur in the system control.
(Depending on controls, there may be ranges where the operation is not conducted continuously.)
(2) Symbols are as follows
TC :Total cooling capacity(kW)
SHC :Sensible heat capacity(kW)

Cool mode	Uhi	Hi	Me	Lo
Air flow	14.00	14	12	10
TC	5.60	5.60	4.98	4.31
SHF	0.75	0.75	0.74	0.73

Heat mode	Uhi	Hi	Me	Lo
Air flow	14	14	12	10
Heating capacity	6.30	6.30	5.65	4.93

Model **FDFU71KXE6** Cool Mode

Air flow	Ambient air temp. (℃DB)	Indoor air temperature 21 ℃DB 14 ℃WB TC	21 ℃DB 14 ℃WB SHC	23 ℃DB 16 ℃WB TC	23 ℃DB 16 ℃WB SHC	26 ℃DB 18 ℃WB TC	26 ℃DB 18 ℃WB SHC	27 ℃DB 19 ℃WB TC	27 ℃DB 19 ℃WB SHC	28 ℃DB 20 ℃WB TC	28 ℃DB 20 ℃WB SHC	31 ℃DB 22 ℃WB TC	31 ℃DB 22 ℃WB SHC	33 ℃DB 24 ℃WB TC	33 ℃DB 24 ℃WB SHC
	10			5.82	4.76	6.96	5.38	7.53	5.51	8.01	5.57	8.97	6.01	9.31	5.86
	12			5.82	4.76	6.96	5.38	7.53	5.51	8.00	5.57	8.94	6.00	9.27	5.84
	14			5.82	4.76	6.96	5.38	7.53	5.51	7.99	5.57	8.90	5.98	9.23	5.83
	16			5.82	4.76	6.96	5.38	7.53	5.51	7.97	5.56	8.87	5.97	9.19	5.81
	18			5.82	4.76	6.96	5.38	7.53	5.51	7.96	5.55	8.84	5.96	9.15	5.80
Uhi	20			5.82	4.76	6.96	5.38	7.53	5.51	7.95	5.55	8.81	5.95	9.11	5.79
	22			5.81	4.76	6.95	5.38	7.53	5.51	7.92	5.54	8.70	5.91	8.99	5.75
18	24			5.80	4.75	6.95	5.38	7.53	5.51	7.88	5.52	8.58	5.87	8.86	5.70
(m³/min)	26			5.80	4.75	6.92	5.37	7.46	5.48	7.79	5.49	8.45	5.82	8.73	5.66
	28	5.25	4.69	5.79	4.75	6.89	5.35	7.38	5.45	7.69	5.45	8.31	5.77	8.59	5.62
	30	5.25	4.69	5.78	4.75	6.83	5.33	7.31	5.42	7.60	5.41	8.19	5.72	8.46	5.57
	32	5.25	4.69	5.77	4.74	6.78	5.31	7.24	5.38	7.51	5.38	8.06	5.68	8.33	5.53
	34	5.25	4.69	5.75	4.73	6.76	5.30	7.15	5.34	7.39	5.32	7.89	5.62	8.16	5.47
	35	5.25	4.69	5.74	4.73	6.75	5.30	7.10	5.33	7.33	5.30	7.80	5.59	8.08	5.44
	36	5.25	4.69	5.73	4.72	6.69	5.27	7.06	5.31	7.26	5.27	7.66	5.52	7.92	5.39
	38	5.25	4.69	5.72	4.72	6.59	5.23	6.99	5.28	7.12	5.22	7.38	5.43	7.61	5.29
	39	5.25	4.69	5.71	4.71	6.54	5.21	6.96	5.27	7.05	5.19	7.24	5.38	7.45	5.24
	41	5.25	4.69	5.69	4.71	6.35	5.12	6.67	5.15	6.76	5.08	6.92	5.26	7.10	5.11
	43	5.25	4.69	5.67	4.70	6.15	5.04	6.39	5.04	6.46	4.94	6.60	5.15	6.75	5.01

Heat Mode

Air flow	Ambient air temp. DB	Ambient air temp. WB	Indoor air temp. 16 ℃CDB	18 ℃CDB	20 ℃CDB	22 ℃CDB	24 ℃CDB
	-19.8	-20	4.64	4.64	4.64	4.64	4.64
	-17.8	-18	4.94	4.94	4.94	4.94	4.94
	-15.7	-16	5.24	5.24	5.24	5.24	5.24
	-13.7	-14	5.54	5.54	5.54	5.54	5.54
	-11.7	-12	5.83	5.83	5.83	5.83	5.83
Uhi	-9.6	-10	6.13	6.13	6.13	6.13	6.13
	-7.5	-8	6.51	6.51	6.51	6.51	6.51
18	-5.5	-6	6.88	6.88	6.88	6.88	6.88
(m³/min)	-3.4	-4	7.12	7.11	7.10	7.03	6.96
	-1.3	-2	7.36	7.34	7.32	7.18	7.04
	0.8	0	7.76	7.65	7.54	7.27	7.00
	3.9	3	8.42	8.12	7.82	7.38	6.94
	7.0	6	9.20	8.60	8.00	7.44	6.88
	10.1	9	9.14	8.56	7.97	7.40	6.82
	13.2	12	9.08	8.50	7.92	7.34	6.76
	16.9	15.5	9.01	8.43	7.85	7.27	6.69

Air flow	Ambient air temp. (℃DB)	Indoor air temperature 21 ℃DB 14 ℃WB TC	21 ℃DB 14 ℃WB SHC	23 ℃DB 16 ℃WB TC	23 ℃DB 16 ℃WB SHC	26 ℃DB 18 ℃WB TC	26 ℃DB 18 ℃WB SHC	27 ℃DB 19 ℃WB TC	27 ℃DB 19 ℃WB SHC	28 ℃DB 20 ℃WB TC	28 ℃DB 20 ℃WB SHC	31 ℃DB 22 ℃WB TC	31 ℃DB 22 ℃WB SHC	33 ℃DB 24 ℃WB TC	33 ℃DB 24 ℃WB SHC
	10			5.82	4.76	6.96	5.38	7.53	5.51	8.01	5.57	8.97	6.01	9.31	5.86
	12			5.82	4.76	6.96	5.38	7.53	5.51	8.00	5.57	8.94	6.00	9.27	5.84
	14			5.82	4.76	6.96	5.38	7.53	5.51	7.99	5.57	8.90	5.98	9.23	5.83
	16			5.82	4.76	6.96	5.38	7.53	5.51	7.97	5.56	8.87	5.97	9.19	5.81
	18			5.82	4.76	6.96	5.38	7.53	5.51	7.96	5.55	8.84	5.96	9.15	5.80
Hi	20			5.82	4.76	6.96	5.38	7.53	5.51	7.95	5.55	8.81	5.95	9.11	5.79
	22			5.81	4.76	6.95	5.38	7.53	5.51	7.92	5.54	8.70	5.91	8.99	5.75
18	24			5.80	4.75	6.95	5.38	7.53	5.51	7.88	5.52	8.58	5.87	8.86	5.70
(m³/min)	26			5.80	4.75	6.92	5.37	7.46	5.48	7.79	5.49	8.45	5.82	8.73	5.66
	28	5.25	4.69	5.79	4.75	6.89	5.35	7.38	5.45	7.69	5.45	8.31	5.77	8.59	5.62
	30	5.25	4.69	5.78	4.75	6.83	5.33	7.31	5.42	7.60	5.41	8.19	5.72	8.46	5.57
	32	5.25	4.69	5.77	4.74	6.78	5.31	7.24	5.38	7.51	5.38	8.06	5.68	8.33	5.53
	34	5.25	4.69	5.75	4.73	6.76	5.30	7.15	5.34	7.39	5.32	7.89	5.62	8.16	5.47
	35	5.25	4.69	5.74	4.73	6.75	5.30	7.10	5.33	7.33	5.30	7.80	5.59	8.08	5.44
	36	5.25	4.69	5.73	4.72	6.69	5.27	7.06	5.31	7.26	5.27	7.66	5.52	7.92	5.39
	38	5.25	4.69	5.72	4.72	6.59	5.23	6.99	5.28	7.12	5.22	7.38	5.43	7.61	5.29
	39	5.25	4.69	5.71	4.71	6.54	5.21	6.96	5.27	7.05	5.19	7.24	5.38	7.45	5.24
	41	5.25	4.69	5.69	4.71	6.35	5.12	6.67	5.15	6.76	5.08	6.92	5.26	7.10	5.11
	43	5.25	4.69	5.67	4.70	6.15	5.04	6.39	5.04	6.46	4.94	6.60	5.15	6.75	5.01

Air flow	Ambient air temp. DB	Ambient air temp. WB	Indoor air temp. 16 ℃CDB	18 ℃CDB	20 ℃CDB	22 ℃CDB	24 ℃CDB
	-19.8	-20	4.64	4.64	4.64	4.64	4.64
	-17.8	-18	4.94	4.94	4.94	4.94	4.94
	-15.7	-16	5.24	5.24	5.24	5.24	5.24
	-13.7	-14	5.54	5.54	5.54	5.54	5.54
	-11.7	-12	5.83	5.83	5.83	5.83	5.83
Hi	-9.6	-10	6.13	6.13	6.13	6.13	6.13
	-7.5	-8	6.51	6.51	6.51	6.51	6.51
18	-5.5	-6	6.88	6.88	6.88	6.88	6.88
(m³/min)	-3.4	-4	7.12	7.11	7.10	7.03	6.96
	-1.3	-2	7.36	7.34	7.32	7.18	7.04
	0.8	0	7.76	7.65	7.54	7.27	7.00
	3.9	3	8.42	8.12	7.82	7.38	6.94
	7.0	6	9.20	8.60	8.00	7.44	6.88
	10.1	9	9.14	8.56	7.97	7.40	6.82
	13.2	12	9.08	8.50	7.92	7.34	6.76
	16.9	15.5	9.01	8.43	7.85	7.27	6.69

Air flow	Ambient air temp. (℃DB)	Indoor air temperature 21 ℃DB 14 ℃WB TC	21 ℃DB 14 ℃WB SHC	23 ℃DB 16 ℃WB TC	23 ℃DB 16 ℃WB SHC	26 ℃DB 18 ℃WB TC	26 ℃DB 18 ℃WB SHC	27 ℃DB 19 ℃WB TC	27 ℃DB 19 ℃WB SHC	28 ℃DB 20 ℃WB TC	28 ℃DB 20 ℃WB SHC	31 ℃DB 22 ℃WB TC	31 ℃DB 22 ℃WB SHC	33 ℃DB 24 ℃WB TC	33 ℃DB 24 ℃WB SHC
	10			5.11	4.14	6.10	4.68	6.60	4.78	7.03	4.85	7.87	5.24	8.17	5.10
	12			5.11	4.14	6.10	4.68	6.60	4.78	7.02	4.85	7.84	5.23	8.14	5.09
	14			5.11	4.14	6.10	4.68	6.60	4.78	7.01	4.84	7.81	5.22	8.10	5.08
	16			5.11	4.14	6.10	4.68	6.60	4.78	7.00	4.84	7.78	5.20	8.07	5.07
	18			5.11	4.14	6.10	4.68	6.60	4.78	6.99	4.83	7.76	5.20	8.03	5.05
Me	20			5.11	4.14	6.10	4.68	6.60	4.78	6.98	4.83	7.73	5.18	8.00	5.04
	22			5.10	4.14	6.10	4.68	6.60	4.78	6.95	4.82	7.63	5.15	7.89	5.01
15	24			5.09	4.13	6.10	4.68	6.60	4.78	6.91	4.80	7.53	5.10	7.78	4.97
(m³/min)	26			5.09	4.13	6.07	4.67	6.54	4.76	6.83	4.77	7.41	5.06	7.66	4.92
	28	4.61	4.08	5.08	4.13	6.04	4.65	6.48	4.73	6.75	4.74	7.29	5.01	7.54	4.88
	30	4.61	4.08	5.07	4.13	6.00	4.64	6.42	4.71	6.67	4.70	7.18	4.97	7.43	4.84
	32	4.61	4.08	5.06	4.12	5.95	4.61	6.35	4.68	6.59	4.67	7.07	4.93	7.31	4.80
	34	4.61	4.08	5.04	4.11	5.93	4.61	6.27	4.65	6.49	4.63	6.92	4.87	7.16	4.75
	35	4.61	4.08	5.03	4.11	5.92	4.60	6.23	4.61	6.44	4.61	6.85	4.85	7.09	4.72
	36	4.61	4.08	5.03	4.11	5.87	4.58	6.20	4.62	6.37	4.58	6.73	4.80	6.95	4.68
	38	4.61	4.08	5.02	4.10	5.78	4.54	6.14	4.59	6.25	4.54	6.48	4.71	6.67	4.58
	39	4.61	4.08	5.01	4.10	5.74	4.53	6.11	4.58	6.19	4.51	6.36	4.67	6.54	4.54
	41	4.61	4.08	4.99	4.09	5.57	4.45	5.86	4.48	5.93	4.41	6.07	4.57	6.23	4.44
	43	4.61	4.08	4.97	4.08	5.40	4.38	5.61	4.38	5.67	4.31	5.79	4.47	5.92	4.34

Air flow	Ambient air temp. DB	Ambient air temp. WB	Indoor air temp. 16 ℃CDB	18 ℃CDB	20 ℃CDB	22 ℃CDB	24 ℃CDB
	-19.8	-20	4.05	4.05	4.05	4.05	4.05
	-17.8	-18	4.32	4.32	4.32	4.32	4.32
	-15.7	-16	4.58	4.58	4.58	4.58	4.58
	-13.7	-14	4.84	4.84	4.84	4.84	4.84
	-11.7	-12	5.10	5.10	5.10	5.10	5.10
Me	-9.6	-10	5.36	5.36	5.36	5.36	5.36
	-7.5	-8	5.69	5.69	5.69	5.69	5.69
15	-5.5	-6	6.01	6.01	6.01	6.01	6.01
(m³/min)	-3.4	-4	6.22	6.21	6.20	6.14	6.08
	-1.3	-2	6.43	6.41	6.40	6.27	6.15
	0.8	0	6.78	6.68	6.59	6.35	6.12
	3.9	3	7.36	7.09	6.83	6.45	6.06
	7.0	6	8.04	7.51	6.99	6.50	6.01
	10.1	9	7.99	7.47	6.96	6.46	5.96
	13.2	12	7.93	7.43	6.92	6.41	5.91
	16.9	15.5	7.87	7.37	6.86	6.35	5.85

Air flow	Ambient air temp. (℃DB)	Indoor air temperature 21 ℃DB 14 ℃WB TC	21 ℃DB 14 ℃WB SHC	23 ℃DB 16 ℃WB TC	23 ℃DB 16 ℃WB SHC	26 ℃DB 18 ℃WB TC	26 ℃DB 18 ℃WB SHC	27 ℃DB 19 ℃WB TC	27 ℃DB 19 ℃WB SHC	28 ℃DB 20 ℃WB TC	28 ℃DB 20 ℃WB SHC	31 ℃DB 22 ℃WB TC	31 ℃DB 22 ℃WB SHC	33 ℃DB 24 ℃WB TC	33 ℃DB 24 ℃WB SHC
	10			4.29	3.41	5.12	3.85	5.54	3.94	5.90	3.99	6.61	4.31	6.86	4.20
	12			4.29	3.41	5.12	3.85	5.54	3.94	5.89	3.99	6.58	4.30	6.83	4.19
	14			4.29	3.41	5.12	3.85	5.54	3.94	5.88	3.99	6.56	4.29	6.80	4.18
	16			4.29	3.41	5.12	3.85	5.54	3.94	5.87	3.98	6.54	4.29	6.77	4.17
	18			4.29	3.41	5.12	3.85	5.54	3.94	5.87	3.98	6.51	4.27	6.74	4.15
Lo	20			4.29	3.41	5.12	3.85	5.54	3.94	5.86	3.98	6.49	4.27	6.71	4.14
	22			4.28	3.40	5.12	3.85	5.54	3.94	5.83	3.96	6.41	4.23	6.62	4.11
12	24			4.27	3.40	5.12	3.85	5.54	3.94	5.80	3.95	6.32	4.20	6.53	4.08
(m³/min)	26			4.27	3.40	5.10	3.84	5.49	3.92	5.74	3.93	6.22	4.16	6.43	4.05
	28	3.87	3.35	4.27	3.40	5.07	3.82	5.44	3.89	5.67	3.90	6.12	4.12	6.33	4.01
	30	3.87	3.35	4.26	3.39	5.03	3.81	5.39	3.87	5.60	3.87	6.03	4.08	6.23	3.98
	32	3.87	3.35	4.25	3.39	4.99	3.79	5.33	3.85	5.54	3.85	5.94	4.05	6.14	3.94
	34	3.87	3.35	4.23	3.38	4.98	3.79	5.26	3.82	5.45	3.81	5.81	4.00	6.01	3.89
	35	3.87	3.35	4.23	3.38	4.97	3.78	5.23	3.82	5.40	3.79	5.75	3.98	5.95	3.87
	36	3.87	3.35	4.22	3.37	4.93	3.76	5.20	3.79	5.35	3.77	5.65	3.94	5.83	3.83
	38	3.87	3.35	4.21	3.37	4.86	3.73	5.15	3.77	5.25	3.73	5.44	3.86	5.60	3.75
	39	3.87	3.35	4.20	3.36	4.82	3.72	5.13	3.76	5.20	3.71	5.34	3.83	5.49	3.72
	41	3.87	3.35	4.19	3.36	4.67	3.65	4.92	3.68	4.98	3.62	5.10	3.74	5.23	3.63
	43	3.87	3.35	4.18	3.36	4.53	3.59	4.71	3.59	4.76	3.54	4.86	3.65	4.97	3.55

Air flow	Ambient air temp. DB	Ambient air temp. WB	Indoor air temp. 16 ℃CDB	18 ℃CDB	20 ℃CDB	22 ℃CDB	24 ℃CDB
	-19.8	-20	3.40	3.40	3.40	3.40	3.40
	-17.8	-18	3.62	3.62	3.62	3.62	3.62
	-15.7	-16	3.84	3.84	3.84	3.84	3.84
	-13.7	-14	4.06	4.06	4.06	4.06	4.06
	-11.7	-12	4.28	4.28	4.28	4.28	4.28
Lo	-9.6	-10	4.50	4.50	4.50	4.50	4.50
	-7.5	-8	4.77	4.77	4.77	4.77	4.77
12	-5.5	-6	5.05	5.05	5.05	5.05	5.05
(m³/min)	-3.4	-4	5.22	5.22	5.21	5.16	5.11
	-1.3	-2	5.40	5.39	5.37	5.27	5.17
	0.8	0	5.69	5.61	5.53	5.33	5.14
	3.9	3	6.18	5.96	5.74	5.42	5.09
	7.0	6	6.75	6.31	5.87	5.46	5.05
	10.1	9	6.71	6.28	5.85	5.43	5.00
	13.2	12	6.66	6.24	5.81	5.39	4.96
	16.9	15.5	6.61	6.19	5.76	5.33	4.91

Note(1) This data shows average statuses out of those possible to occur in the system control.
(Depending on controls, there may be ranges where the operation is not conducted continuously.)

(2) Symbols are as follows
TC :Total cooling capacity(kW)
SHC :Sensible heat capacity(kW)

Cool mode	Uhi	Hi	Me	Lo
Air flow	18.00	18	15	12
TC	7.10	7.10	6.23	5.23
SHF	0.75	0.75	0.74	0.73

Heat mode	Uhi	Hi	Me	Lo
Air flow	18	18	15	12
Heating capacity	8.00	8.00	6.99	5.87

4.5 APPLICATION DATA

SAFETY PRECAUTIONS

- Please read these "Safety Precautions" first then accurately execute the installation work.
- Though the precautionary points indicated herein are divided under two headings, ⚠WARNING and ⚠CAUTION, those points which are related to the strong possibility of an installation done in error resulting in death or serious injury are listed in the ⚠WARNING section. However, there is also a possibility of serious consequences in relationship to the points listed in the ⚠CAUTION section as well.
  In either case, important safety related information is indicated, so by all means, properly observe all that is mentioned.
- After completing the installation, along with confirming that no abnormalities were seen from the operation tests, please explain operating methods as well as maintenance methods to the user (customer) of this equipment, based on the owner's manual. Moreover, ask the customer to keep this sheet together with the owner's manual.

⚠ WARNING

- Installation should be performed by the dealer or a company speciallizing in this type of installarion. If you install the equipment yourself, installation errors could result in water leaks, electric shock, and/or a fire, as well as other hazards.
- Conduct installation work in accordance with the instructions in this installation manual. Installation errors could result in water leaks, electric shock, or fire.
- Sling the unit at the specified points with ropes properly rated for the weight in liftting it for portage. An improper manner of portage can result in a fail of the unit resulting in an accident invoiving personal death or injury.
- When installing a unit in a small rooms, take measure so that if the refrigerant leaks, it does not exceed the concentration limit. For information regarding measures to prevent the concentration limit from being exceed, please contact the dealer.
- It refrigerant leaks and the concentration limit is exceeded, suffocation could occur.
- Install the equipment in a location that can sufficiently support the weight of the equipment. If the area is not strong enough, an accident could result from the unit falling.
- Install the equipment in a location that can withstand strong winds, such as typhoons, and earthquakes. If the installation is not secure, an accident could result from the unit falling.
- Always turn off power before work is performed inside the unit such as for installation or servicing. A failure to observe this instruction can cause a danger or electric shock.
- Electrical work should be done by a licensed electrician who shall do the work in accordance with the Technical Standards Regarding Electrical Equipment. Indoor Wiring Provisions, and this installation manual. The electrician shall use specified circuits for the equipment. If the power supply circuit capacity is insuficient or the work is not done correcty, it could result in electric shock or a fire.
- For wiring, the specified cable should be used, the connections should be secure, and the fixtures shall be strong enough to prevent cables from being pulled out from the terminal connections. Incorrect connections or work fixtures could result in heat generation or a fire.
- In cabling, arrange cables suitably so that they may not get off their support and then fix the service panel securely. Improper installation can cause heat generation and a resultant fire. Please prevent any substance other than the specified refrigerant (R410A) such as air from entering the refrigerant cycle in installing or moving the air conditioning system. Contamination by air or a foreign substance can cause an abnormal pressure build-up inside the refrigerant cycle and a resultant explosion and personaly injury.
- Use only parts supplied with the unit and specified supply parts for installation. The use of unauthorized parts may cause the leaking of water or electricitly causing a danger of electric shock or a fire, a refrigerant leak, performance degradation, and control failures.
- Do not open operation valves (either liquid or gas or both) until refrigerant piping, an air-tightness test and an air purge are completed. When a leak of refrigerant gas occurs during piping work, stop brazing pipes and ventilate the room. Refrigerant gas, when it comes into contact with bare fire, can generate a toxic gas.
- When installation is completed, check for refrigerant gas leaks. If the refrigerant gas leaks indoors, it could come in contact with a fan heater, burner, or hot plate, which could generate a poisonous gas.

⚠ CAUTION

- Ground the equipment. Do not connect the ground wire to gas piping, water piping, a lightning rod, or telephone ground wires. It grounding is not performed correctly electric shock could occur.
- Depending on the installation location, a circuit breaker may need to be installed. It a circuit breaker is not installed, electric shock may occur.
- Please follow this manual faithfully in performing installation work. Improper installation work can cause abnormal vibrations and noise generation.
- Do not install the equipment in areas where there is danger of flammable gas leaks. It such gas does leak it could collect around the units and cause a fire.
- Install the drain piping in accordance with the installation manual so that it properly discharges waste water and is maintained at a temperature that prevents condensation.
- Do not install the outdoor unit where winds from its fan blow directly onto a plant, etc. Winds can affect adversely to the plant, etc.
- Secure a space for inspection and maintenance as specified in the manual. An insufficient space can result in an accident such as a fall from the installation point and a resultant personal injury.
- When the outdoor unit is installed on a roof or at an elevated point, provide permanent ladders and handrails along the access route and fences and handrails around the outdoor unit.
- In tightening a flare nut, use a double spanner and observe the specified tightening torque. Care must be taken so as not to over-tighten a nut and damage the flare part. (Please refer to the tightening torque) The loosening or damage of the flare part can cause a refrigerant gas leak and a resultant lack-of-oxygen accident.
- Please dress the refrigerant piping with a heat insulation material for prevention of dew condensation. Improper heat insulation for prevention of dew condensation can cause the leaking or dripping of water and a resultant soaking of household effects.
- When refrigerant piping is completed, check its air-tighteness with nitrogen gas to make sure it does not have a leak. A leak of refrigerant gas in a narrow room beyond the safety limit concentration can cause a lack-of oxygen accident.
- If the humidity exceeds 80% or the drain or piping become clogged, condensation from the indoor unit could drip and cause damage. Please do not install the indoor units above items of furniture, etc. that you do not want to get wert. Also, do not place items that you do not want to get wet underneath the indoor units.

(1) Installation of indoor unit

(a) Ceiling cassete-4 way type (FDT)

(i) Selection of installation location for the indoor unit

① Select the suitable areas to install the unit under approval of the user.

- Areas where the indoor unit can deliver hot and cold wind sufficiently. Suggest to the user to use a circulator the ceiling height is over 3m to avoid warm air being accumulated on the ceiling.
- Areas where there is enough space to install and service.
- Areas where it can be drained properly. Areas where drain pipe descending slope can be taken.
- Areas where there is no obstruction of airflow on both air return grille and air supply port.
- Areas where fire alarm will not be accidentally activated by the air conditioner.
- Areas where the supply air does not short-circuit.
- Areas where it is not influenced by draft air.
- Areas not exposed to direct sunlight.
- Areas where dew point is lower than around 28ºC and relative humidity is lower than 80%.

  (This indoor unit is tested under the condition of JIS (Japan Industrial Standard) high humidity condition and confirmed there is no problem. However, there is some risk of condensation drop if the air conditioner is operated under the severer condition than mentioned above.
  If there is a possibility to use it under such a condition, attach additional insulation of 10 to 20mm thick for entire surface of indoor unit, refrigeration pipe and drain pipe.)
- Areas where TV and radio stays away more than 1m. (It could cause jamming and noise.)
- Areas where any items which will be damaged by getting wet are not placed such as food, table wares, server, or medical equipment under the unit.
- Areas where there is no influence by the heat which cookware generates.
- Areas where not exposed to oil mist, powder and/or steam directly such as above fryer.
- Areas where lighting device such as fluorescent light or incandescent light doesnít affect the operation.
  (A beam from lighting device sometimes affects the infrared receiver for the wireless remote controller and the air conditioner might not work properly.)

② Check if the place where the air conditioner is installed can hold the weight of the unit. If it is not able to hold, reinforce the structure with boards and beams strong enough to hold it. If the strength is not enough, it could cause injury due to unit falling.

③ If there are 2 units of wireless type, keep them away for more than 6m to avoid malfunction due to cross communication.

④ When plural indoor units are installed nearby, keep them away for more than 4 to 5m.

Space for installation and service

- When it is not possible to keep enough space between indoor unit and wall or between indoor units, close the air supply port where it is not possible to keep space and confirm there is no short circuit of airflow.
- Install the indoor unit at a height of more than 2.5m above the floor.

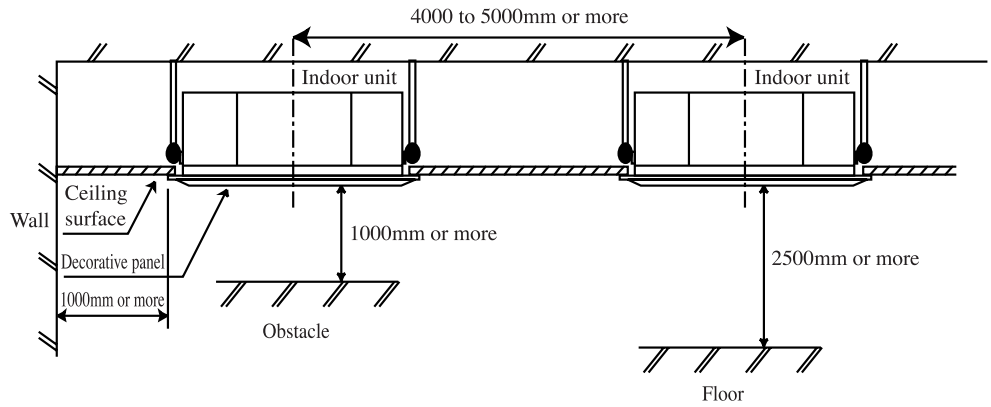

Set blow-out pattern

- Select the most proper number of blow-out air supply port direction from 4 way, 3 way or 2 way according to the shape of the room and installation position. (1 way is not available.)
- If it is necessary to change the number of air supply port, prepare the covering materials. (sold as accessory)
- Instruct the user not to use low fan speed when 2way or 3way air supply is used.
- Do not use 2way air supply port under high temperature and humidity environment. (Otherwise it could cause condensation and leakage of water.)
- It is possible to set the airflow direction port by port independently. Refer to tne userís manual for details.

(ii) Preparation before installation

① If suspension bolt becomes longer, do reinforcement of earthquake resistant.

ⓐ For grid ceiling

When suspension bolt length is over 500mm, or the gap between the ceiling and roof is over 700mm, apply earthquake resistant brace to the bolt.

ⓑ In case the unit is hanged directly from the slab and is installed on the ceiling plane which has enough strength. When suspension bolt length is over 1000mm, apply the earthquake resistant brace to the bolt.

② Prepare four (4) sets of suspension bolt, nut and spring washer (M10 or M8) on site.

Ceiling opening, Suspension bolts pitch, Pipe position

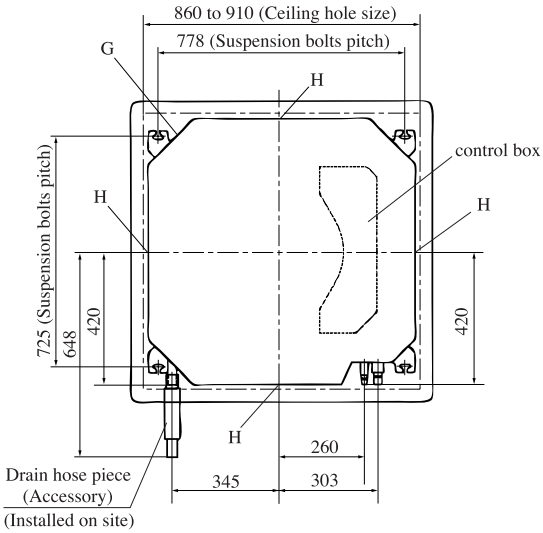

(mm)

Type	a
28 to 71 type	246
90 to 160 type	298

Symbol	
A	Gas piping
B	Liquid piping
C	Drain piping
D	Hole for wiring
F	Suspension bolts
G	Outside air opening for ducting
H	Air outlet opening for ducting

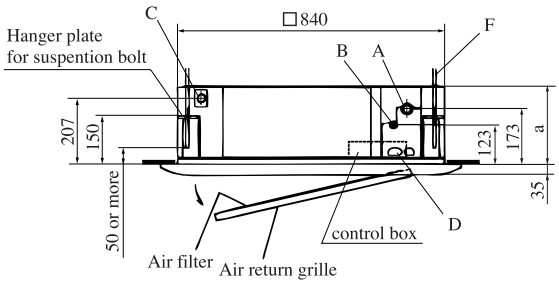

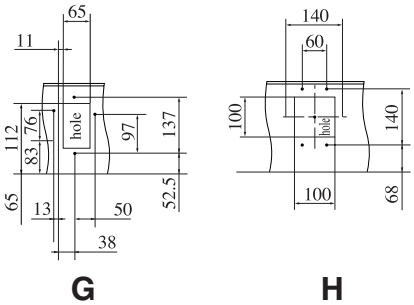

(iii) Installation of indoor unit

Work procedure

① Prepare a ceiling hole with the size of from 860mm × 860mm to 910mm × 910mm referring to the template attached in the package.

② Arrange the suspension bolt at the right position (725mm × 778mm).

③ Make sure to use four suspension bolts and fix them so as to be able to hold 500N load.

④ Ensure that the lower end of the suspension bolt should be 50mm above the ceiling plane. Temporarily put the four lower nuts 150mm above the ceiling plane and the upper plane. Temporarily put the four lower nuts 150mm above the ceiling plane and the upper nuts on distant place from the lower nuts in order not to obstruct hanging the indoor unit or adjust the indoor unit position, and then hang the indoor unit.

⑤ Adjust the indoor unit position after hanging it by inserting the level gauge attached on the package into the air supply port and checking if the gap between the ceiling plane and the indoor unit is appropriate. In order to adjust the indoor unit position, adjust the lower nuts while the upper nuts are put on distant place. Confirm there is no backlash between the hanger plate for suspension bolt and the lower nut and washer.

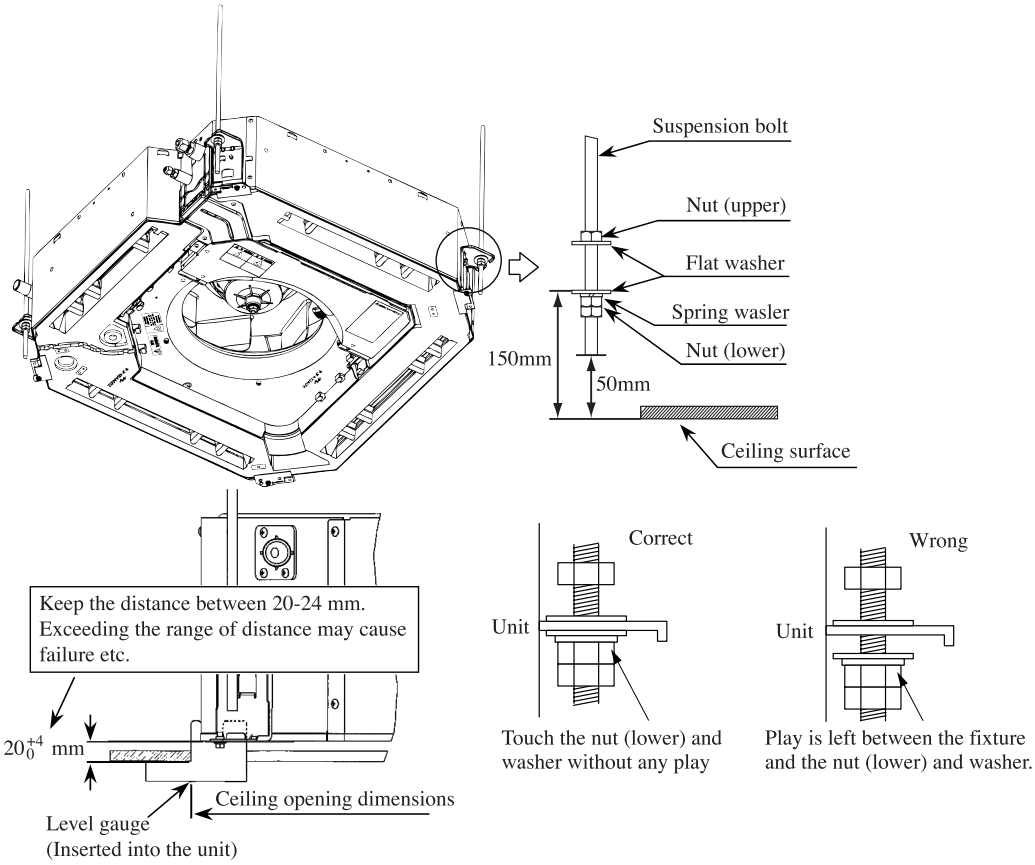

⑥ Make sure to install the indoor unit horizontally. Confirm the levelness of the indoor unit with a level gauge or transparent hose filled with water. Keep the height difference at both ends of the indoor unit within 3mm.

⑦ Tighten four upper nuts and fix the unit after height and levelness adjustment.

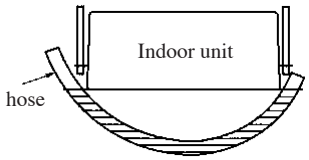

Caution

- Do not adjust the height by adjusting upper nuts. It will cause unexpected stress on the indoor unit and it will lead to deformation of the unit, failure of attaching a panel, and generating noise from the fan.
- Make sure to install the indoor unit horizontally and set the gap between the unit underside and the ceiling plane properly. Improper installation may cause air leakage, dew condensation, water leakage and noise.
- Even after decorative panel attached, still the unit height can be adjusted finely. Refer to the installation manual for decorative panel for details.
- Make sure there is no gap between decoration panel and ceiling surface, and between decoration panel and the indoor unit. The gap may cause air leakage, dew condensation and water leakage.
- In case decorative panel is not installed at the same time, or ceiling material is installed after the unit installed, put the cardboard template for installation attached on the package (packing material of cardboard box) on the bottom of the unit in order to avoid dust coming into the indoor unit.

(iv) Refrigerant pipe

Caution

- Use the new refrigerant pipe.
  When re-using the existing pipe system for R22 or R407C, pay attention to the following items.
  - Change the flare nuts with the attached ones (JIS category 2), and reprocess the flare parts.
  - Do not use thin-walled pipes.
- Use phosphorus deoxidized copper alloy seamless pipe (C1220T specified in JIS H3300) for refrigeration pipe installation. In addition, make sure there is no damage both inside and outside of the pipe, and no harmful substances such as sulfur, oxide, dust or a contaminant stuck on the pipes.
- Do not use any refrigerant other than R410A.
  Using other refrigerant except R410A (R22 etc.) may degrade inside refrigeration oil. And air getting into refrigeration circuit may cause over-pressure and resultant it may result in bursting, etc.
- Store the copper pipes indoors and seal the both end of them until they are brazed in order to avoid any dust, dirt or water getting into pipe. Otherwise it will cause degradation of refrigeration oil and compressor breakdown, etc.
- Use special tools for R410 refrigerant.

Work procedure

① Remove the flare nut and blind flanges on the pipe of the indoor unit.
  ❊ Make sure to loosen the flare nut with holding the nut on pipe side with a spanner and giving torque to the nut with another spanner in order to avoid unexpected stress to the copper pipe, and then remove them.
  (Gas may come out at this time, but it is not abnormal.)
  - Pay attention whether the flare nut pops out. (as the indoor unit is sometimes pressured.)

② Make a flare on liquid pipe and gas pipe, and connect the refrigeration pipes on the indoor unit.
  ❊ Bend the pipe with as big radius as possible and do not bend the pipe repeatedly. In addition, do not twist and crush the pipes.
  ❊ Do a flare connection as follows:
  - Make sure to loosen the flare nut with holding the nut on pipe side with a spanner and giving torque to the nut with another spanner in order to avoid unexpected stress to the copper pipe, and then remove them.
  - When fastening the flare nut, align the refrigeration pipe with the center of flare nut, screw the nut for 3-4 times by hand and then tighten it by spanner with the specified torque mentioned in the table below. Make sure to hold the pipe on the indoor unit securely by a spanner when tightening the nut in order to avoid unexpected stress on the copper pipe.

③ Cover the flare connection part of the indoor unit with attached insulation material after a gas leakage inspection, and tighten both ends with attached straps.
  - Make sure to insulate both gas pipes and liquid pipes completely.
  ❊ Incomplete insulation may cause dew condensation or water dropping.

④ Refrigerant is charged in the outdoor unit.
  As for the additional refrigerant charge for the indoor unit and piping, refer to the installation manual attached to the outdoor unit.

Pipe diameter	Tightening torque N·m
ϕ 6.35	14 to 18
ϕ 9.52	34 to 42
ϕ 12.7	49 to 61
ϕ 15.88	68 to 82
ϕ 19.05	100 to 120

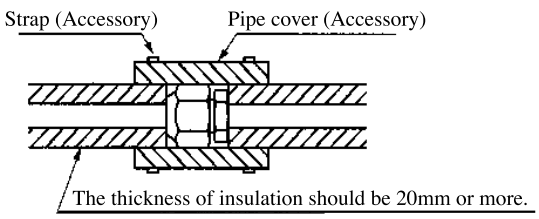

(v) Drain pipe

Caution

- Install the drain pipe according to the installation manual in order to drain properly.
  Imperfection in draining may cause flood indoors and wetting the household goods, etc.
- Do not put the drain pipe directly into the ditch where toxic gas such as sulfur, the other harmful and inflammable gas is generated. Toxic gas would flow into the room and it would cause serious damage to user's health and safety (some poisoning or deficiency of oxygen). In addition, it may cause corrosion of heat exchanger and bad smell.
- Connect the pipe securely to avoid water leakage from the joint.
- Insulate the pipe properly to avoid condensation drop.
- Check if the water can flow out properly from both the drain outlet on the indoor unit and the end of the drain pipe after installation.
- Make sure to make descending slope of greater than 1/100 and do not make up-down bend and/or trap in the midway. In addition, do not put air vent on the drain pipe. Check if water is drained out properly from the pipe during commissioning. Also, keep sufficient space for inspection and maintenance.

Work procedure

① Insert the supplied drain hose (the end made of soft PVC) to the step of the drain socket on the indoor unit and fix it securely with the clamp.

- Do not apply adhesives on this end.

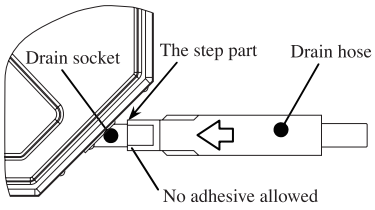

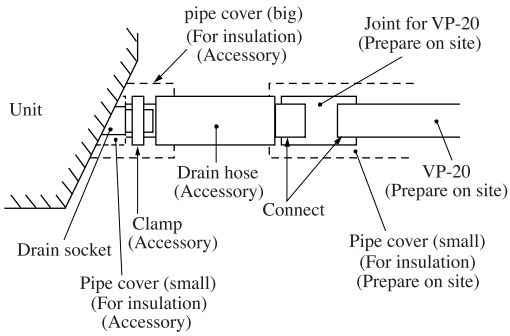

② Prepare a joint for connecting VP-20 pipe, adhere and connect the joint to the drain hose (the end made of rigid PVC), and adhere and connect VP-20 pipe (prepare on site).

❊ As for drain pipe, apply VP-20 made of rigid PVC which is on the market.

- Make sure that the adhesive will not get into the supplied drain hose.
  It may cause the flexible part broken after the adhesive is dried up and gets rigid.
- The flexible drain hose is intended to absorb a small difference at installation of the unit or drain pipes. Intentional bending, expanding may cause the flexible hose broken and water leakage.

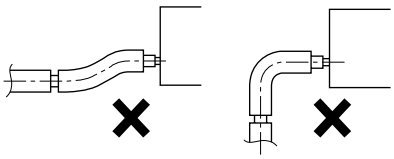

③ Make sure to make descending slope of greater than 1/100 and do not make up-down bend and/or trap in the midway.

- Pay attention not to give stress on the pipe on the indoor unit side, and support and fix the pipe as close place to the unit as possible when connecting the drain pipe.
- Do not set up air vent.

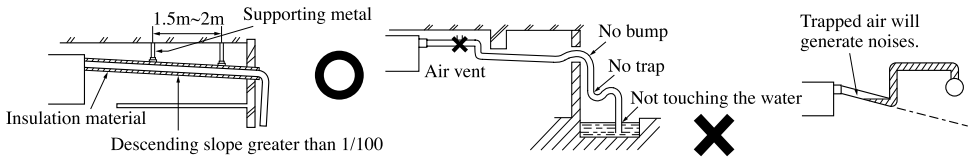

- When sharing a drain pipe for more than one unit, lay the main pipe 100mm below the drain outlet of the unit. In addition, select VP-30 or bigger size for main drain pipe.

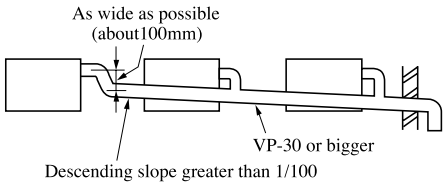

④ Insulate the drain pipe.

- Be sure to insulate the drain socket and rigid PVC pipe installed indoors otherwise it may cause dew condensation and water leakage.

❊ After drainage test implementation, cover the drain socket part with pipe cover (small size), then use the pipe cover (big size) to cover the pipe cover (small size), clamps and part of the drain hose, and fix and wrap it with tapes to wrap and make joint part gapless.

Drain up

- The position for drain pipe outlet can be raised up to 700mm above the ceiling. Use elbows for installation to avoid obstacles inside ceiling. If the horizontal drain pipe is too long before vertical pipe, the backflow of water will increase when the unit is stopped, and it may cause overflow of water from the drain pan on the indoor unit. In order to avoid overflow, keep the horizontal pipe length and offset of the pipe within the limit shown in the figure below.

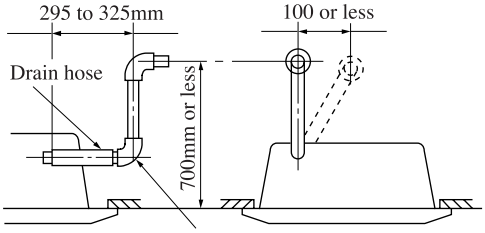

Drain test

- After installation of drain pipe, make sure that drain system work in good condition and no water leakage from joint and drain pan. Check if the motor sound of drain pump is normal or not.
- Do drain test even if installation of heating season.
- For new building cases, make sure to complete the test before hanging the ceiling.

① Pour water of about 1000cc into the drain pan in the indoor unit by pump so as not to get the electrical component wet.

② Make sure that water is drained out properly and there is no water leakage from any joints of the drain pipe at the test.
Confirm that the water is properly drained out while the drain motor is operating. At the drain socket (transparent), it is possible to check if the water is drained out properly.

③ Unplug the drain plug on the indoor unit to remove remaining water on the drain pan after the test, and re-plug it. And insulate the drain pipe properly finally.

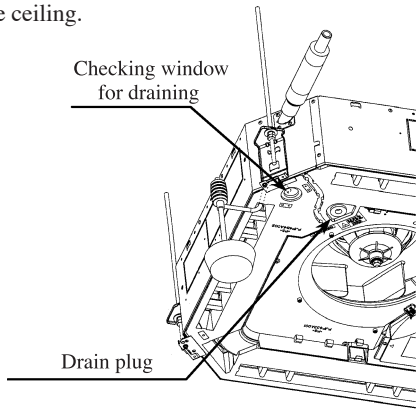

Drain pump operation

① In case electrical wiring work finished
Drain pump can be operated by remote controller (wired).
For the operation method, refer to Operation for drain pump in the installation manual for wiring work.

② In case electrical wiring work not finished
Drain pump will run continuously when the dip switch“W7-1” on the indoor unit PCB is turned ON, the Connector CNB is disconnected, and then the power supply (230VAC on the terminal block ① and ②) is turned ON.
Make sure to turn OFF “W7-1” and reconnect the Connector CNB after the test.

(vi) Wiring-out position and wiring connection

- Electrical installation work must be performed according to the installation manual by an electrical installation service provider qualified by a power provider of the country, and be executed according to the technical standards and other regulations applicable to electrical installation in the country.
  Be sure to use an exclusive circuit.
- Use specified cord, fasten the wiring to the terminal securely, and hold the cord securely in order not to apply unexpected stress on the terminal.
- Do not put both power source line and signal line on the same route. It may cause miscommunication and malfunction.
- Be sure to do D type earth work.
- For the details of electrical wiring work, see attached instruction manual for electrical wiring work.

① Remove a lid of the control box (3 screws) and the wiring cover (2 screws).
② Hold each wiring inside the unit and fasten them to terminal block securely.
③ Fix the wiring with clamps.
④ Install the removed parts back to original place.

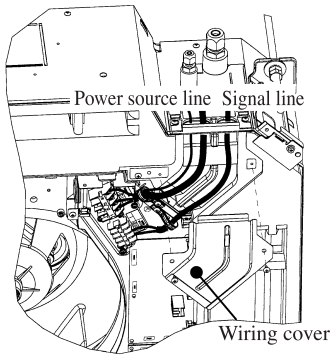

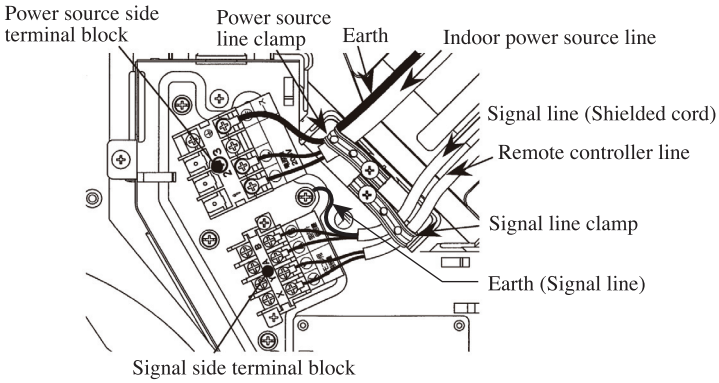

(vii) How to check the dirt of drain pan (Maintenance)

The method of checking the dirt of drain pan

- It is possible to check the dirt for inlet of drain pan without detaching the panel.
  (Inspection is not possible when the high efficient filter and option spacer is installed.)

① Open the air return grille and remove the panel corner cover on drain pan side.

② Remove the cover of inspection window. (1screw)

③ Check the drain pan from the inspection window.
If the drain pan is very dirty, remove the drain pan and clean it.

④ After checking of the dirty of drain pan, restore the cover of the inspection window securely. Improper restoration of the cover may cause dew condensation and water leakage.

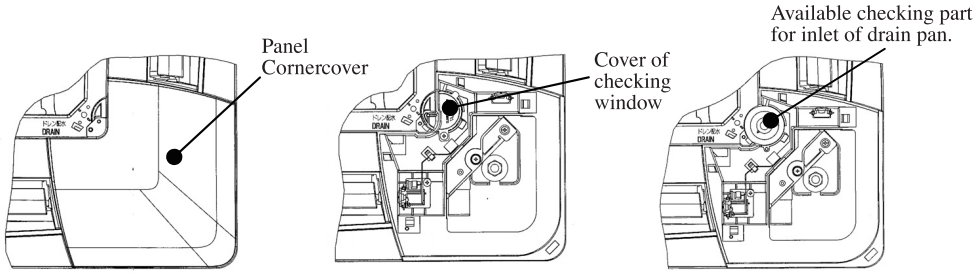

Attention for removing drain pan

- The fixing components have been attached the with drain pan. Pay attention to these components during installation and removing. Take off the hanging hook after removing four screws. During the installation of drain pan, fix the drain pan firmly by using four screws after hanging it up with the fixing hook.

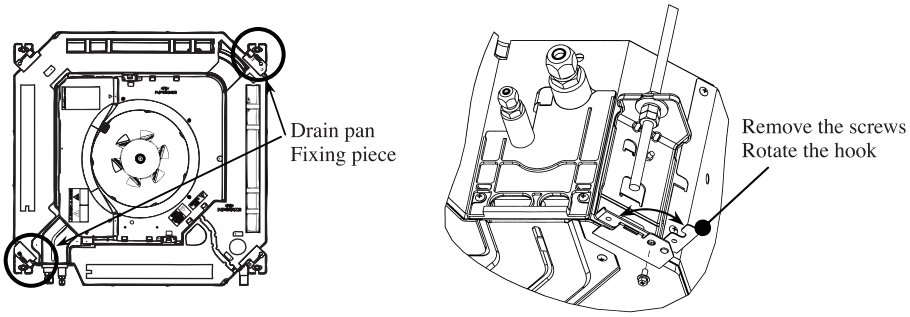

(b) Ceiling cassete-4 way compact type (FDTC)

(i) Selection of installation location

1) Select location where the space above ceiling is larger than those mentioned below and perfect draining can be assured.
2) With the customer's consent, select a location with following suitable conditions.
   a) Where cool air or hot air can easily pass through.
      If the height of the location exceeds 3 m, hot air will gather in the ceiling. Suggest to the customer to also install a circulator.
   b) Where water can be completely drained. A sloping location for drainage.
   c) Where there are no wind disturbances to the air return air supply, where the fire alarm will not be set off erroneosly, where no air circulation short circuits occur.
   d) Where there is no direct sunlight.
   e) If the humidity above the ceiling exceeds 80% or the condensation temperature above the ceiling exceeds 28ºC, affix polyurethane foam (with a thickness to 10 or greater) above the insulation in the ceiling panels.

   (Carry out tests of the main unit under the above conditions and confirm that there is no failure. However, if the environment where the unit is installed exceeds the above conditions and the unit is operated in high humidity conditions, there is danger of condensate dripping down. If there is a possibility that the unit will be used under such conditions, dress 10 to 20 mm of insulation material on the main unit, piping and drain pipes.)
3) Consider the supporting strength of the location. If the strength is not sufficient to sustain the unit weight, use reinforcing materials.

(ii) Installation space for unit

a) When a sufficient interval cannot be secured between the unit and a wall or another unit, shut up diffusers on that port to block air supply and make sure that no air short-circuiting is occurring. (A air supply port blocking material is available as an optional part)
   - Do not use the unit in the "Lo" wind mode, when air is blown into two or three directions.

• Installation space

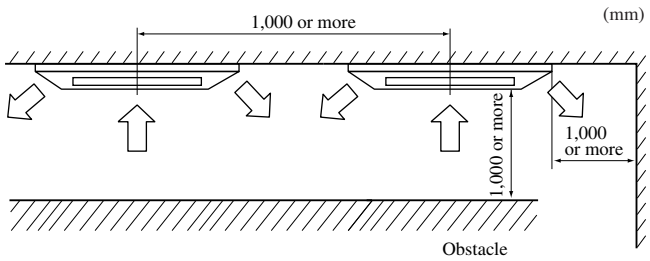

Note (1) This shows the installation interval dimensions between units centered on the units.

Unit:mm

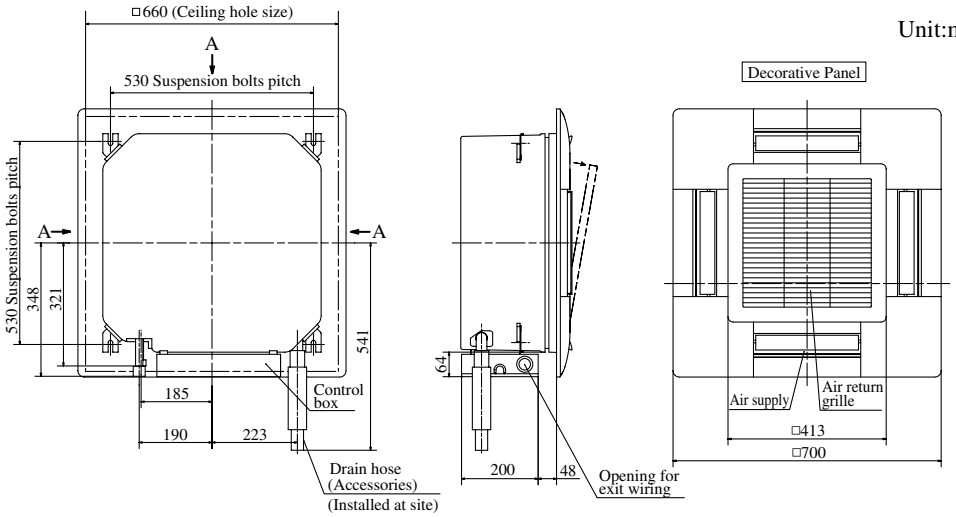

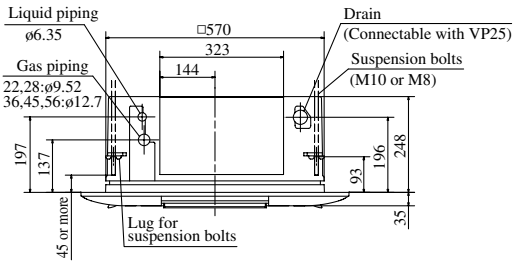

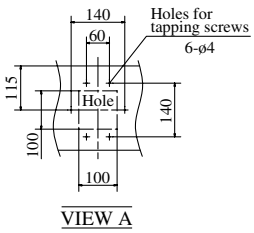

(iii) Suspension

- Please arrange four sets of a suspension bolt (M10 or M8), a nut matching the bolt, a flat washers and a spring washer at the installation site.

When suspended from the ceiling

1) This unit is designed for installation on a 2 × 2 grid ceiling.
   If necessary, please detach the T bar temporarily before you install it.
   (When it is installed on a ceiling other than 2 × 2 grid ceiling, please do not fail to provide an inspection port on the control box side.)
2) Determine the positions of suspension bolts (530 × 530).
3) Use four suspension bolts, each fastened in such a manner that it can withstand pull force of 490N.
4) Make suspension bolts to the length that leaves approximately 45mm of them above the ceiling. In hoisting the unit main body in, temporarily fasten the four lower nuts of the suspension bolts approx. 93 mm from the ceiling and the four upper nuts at positions sufficiently far from the lower nuts so that they may not hamper installation work when the unit is hoisted in or the height is adjusted.

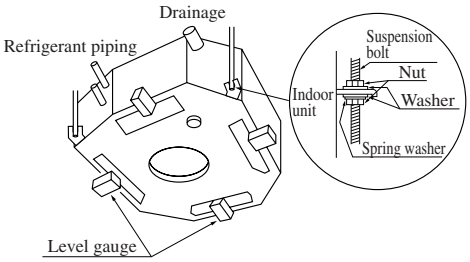

5) Put in the unit on an angle.

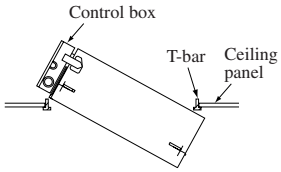

6) After hoisting in the unit, attach level gauges supplied as accessories and determine the unit position (height). To adjust height, use the four lower nuts with the four upper nuts left loose. Please make sure that the unit's four hanging fixtures touch the four lower nuts and washers evenly without any play.

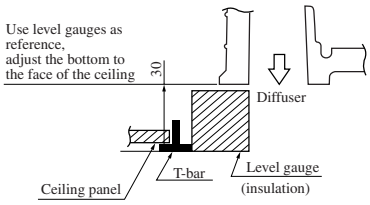

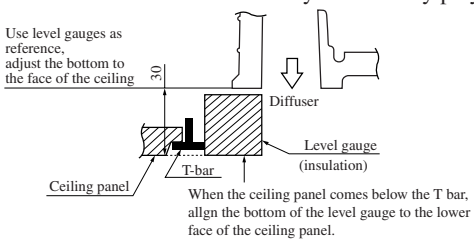

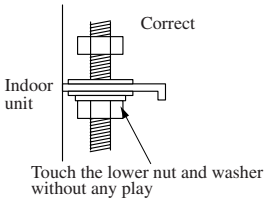

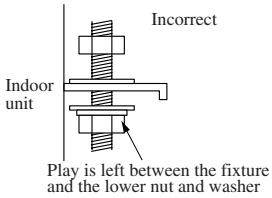

7) Please make sure that the unit main body is installed levelly. Level must be checked with a level or a clear hose filled with water. (A tolerable height difference at an end of the unit is eithin 3 mm)

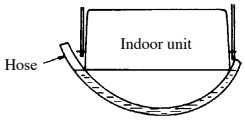

8) After you have adjusted the height and level of the unit, fasten the four upper nuts to fix the unit.

Note (1) Do not adjust the height with the upper nuts. It may cause deformation due to excessive force working on the unit main body, which can result in such problems that you cannot attach the panel or noises are generated from the interfering fan.

When embedded into ceiling

1) Determine the positions of hanging bolts (530 × 530).
   The pitch center of a suspension bolt must accord with the center of the unit.
2) Use four suspension bolts, each fastened in such a manner that it can withstand pull force of 490N.
3) Fix the unit as per (iii) 5) and 7) above.

Note (1): When a suspension bolt exceeds 1.3 m in length, use an M10 bolt and give it reinforcements such as braces.

(iv) Drain Piping

1) Glue the drain hose supplied as an accessory and a VP-20 joint before lifting the unit.
2) The drain hose is to provide a buffer to absorb a slight dislocation of the unit or the drain piping during installation work. If it is subject to abuse such as being bent or pulled deliberately, it may break, which will result in a water leak.

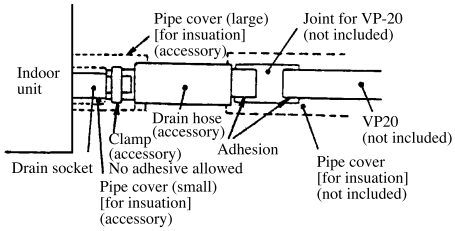

3) Care must be taken so as not to allow an adhesive to run into the drain hose. When it is hardened, it can cause a breakage of a flexible part, if the flexible part receives stress.

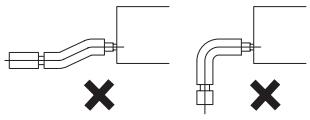

4) Use VP-20 general-purpose hard PVC pipes for drain piping.
5) Insert the drain hose supplied as an accessory (soft PVC end) to the stepped part of the unit's drain socket and then fasten it with the clamp also supplied as an accessory.

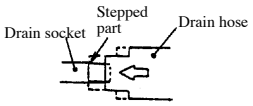

6) Adhesive must not be used.
   a) Attach a VP-20 joint (to be procured locally) to joint it with the drain hose (hard PVC end) and then attach a VP-20 (to be procured locally) to the joint.
   b) Give the drain piping a descending grade (1/50-1/100) and never create a bump to go over or a trap.
   c) In connecting drain pipes, care must be taken so as not to apply force to the unit side piping and fix the pipe at a point as close to the unit as possible.
   d) Do not create an air vent under any circumstances.
   e) When drain piping is implemented for more than one unit, provide a collecting main about 100 mm below the units' drain outlets from which it collects drain. Use a VP-30 or larger pipe for a collecting main.
   f) Do not fail to provide heat insulation at the following two points because they can cause dew condensation and a resultant water leak.

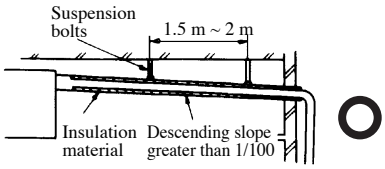

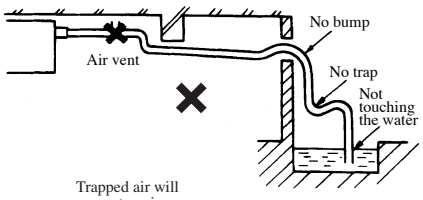

7) Drain socket
   After a drain test is completed, apply a pipe cover (small: accessory) onto the drain socket, cover the pipe cover (small), the clamp and part of the drain hose with a pipe cover (large: accessory) and wrap it with a tape completely without leaving any gaps.
   (Cut pipe covers into appropriate shapes)

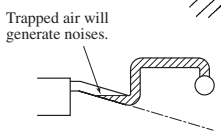

8) Hard PVC pipes laid indoor
   a) Since a drain pipe outlet can be raised up to 600 mm from the ceiling, use elbows, etc. to install drain pipes, if there are obstacles preventing normal drain pipe arrangement. When the drain pipe is raised at a point far from a unit, it can cause an overflow due to a back flow of drain upon stoppage, so arrange piping to keep the dimensions specified in the illustration shown on the left.
   b) Install the drain pipe outlet where no odor is likely to be generated.
   c) Do not lead the drain pipe into a ditch where the generation of harmful gas such as sulfuric gas or flammable gas is expected. A failure to observe this instruction may cause such harmful or flammable gas to flow into the room.

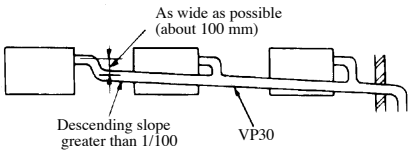

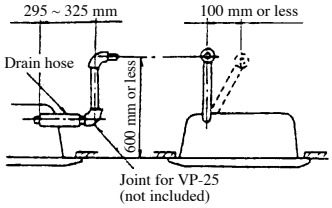

Drainage test

① Check that water is draining thoroghly during test run, and that there are no water leaks from the joints and the drain pan.
② The test has to be performed even if the unit is installed in the season when the unit is used for heating.
③ In a new house, perform the test before the ceiling is fitted.
- Using a water pump, pour about 1000 cc of water to the drain pan through the supply outlet.
- Check the transparent drain-out section of the drain hose for normal flow of drainage.
  * While observing the noise from the drain motor, test drain operation.
- Take off the drain plug to release the water. After the water is drained, place the drain pulg back where it was..
  * Be careful not to get splashed when pulling the drain plug.

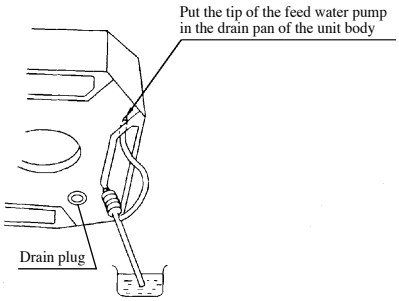

Forced drain pump operation

① In case electrical wiring work finished
Drain pump can be operated by remote controller (wired).
For the operation method, refer to Operation for drain pump in the installation manual for wiring work.
② In case electrical wiring work not finished
Drain pump will run continuously when the dip switch "W7-1" on the indoor unit PCB is turned ON, the Connector CNB is disconnected, and then the power supply (230VAC on the terminal block ① and ②) is turned ON.
Make sure to turn OFF "W7-1" and reconnect the Connector CNB after the test.

◆ Setup from a remote controller side.

Drain pump operation from a recomte controller unit is possible. Operate a remote controller unit by following the steps described below.

1. To start a forced drain pump operation.
   ① Press the TEST button for three seconds or longer.
   The display will change from "⬍ SELECT ITEM"→ " ○ SET"→ " ✳ TEST RUN ▼ "
   ② Press the ▼ button once while " ✳ TEST RUN ▼ " is displayed, and cause "DRAIN PUMP ⬍" to be displayed.
   ③ When the SET button is pressed, a drain pump operation will start.
   Display: " DRAIN PUMP RUN"→ " ○ → STOP"
2. To cancel a drain pump operation.
   ① If either SET or ON/OFF button is pressed, a forced drain pump operation will stop.
   The air conditioning system will become OFF.

(v) Panel installation

1) Accessories (It is attached to the panel)

1	Hook		1 piece	For fixing temporarily
2	Chain		2 piece	
3	Screw		4 piece	For hoisting the panel
4	Screw		1 piece	For attaching a hook
5	Screw		2 piece	For attaching a chain

2) Make sure that the unit main body is positioned at the correct height and the opening on the ceiling is made to the correct dimensions with the level gauge supplied with the main body.
   Remove the level gauge before you attach the panel.
3) Screw in two bolts out of the four supplied with the panel by about slightly less than 5mm. (● mark Ⓐ, Ⓑ) [Figure 1]

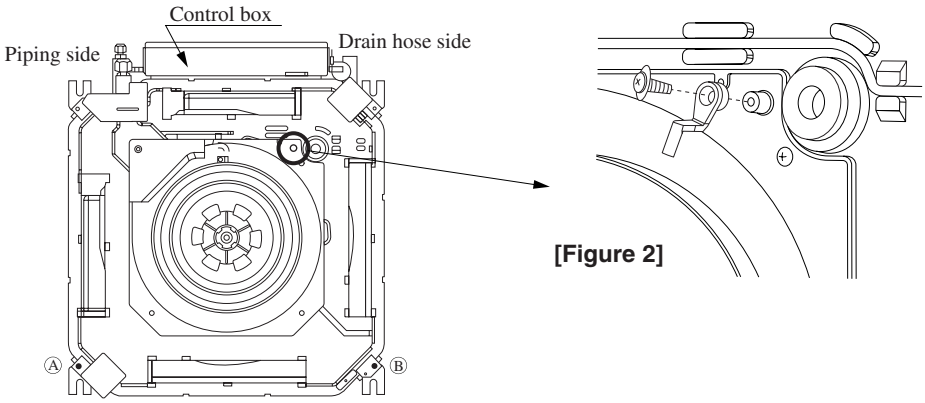

[Figure 1]

[Figure 2]

4) Attach the hook supplied with the panel to the main body with the hook fixing screw (1 screw). [Figure 2]
5) Open the air return grille.
6) Please remove the screw of a corner panel and remove a corner panel. (four places) [Figure 3]

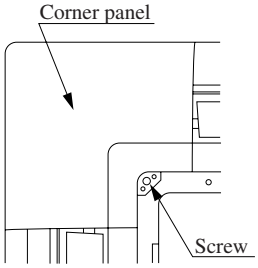

[Figure 3]

7) A panel is hooked on two bolts (● mark Ⓐ, Ⓑ) [Figure 4]

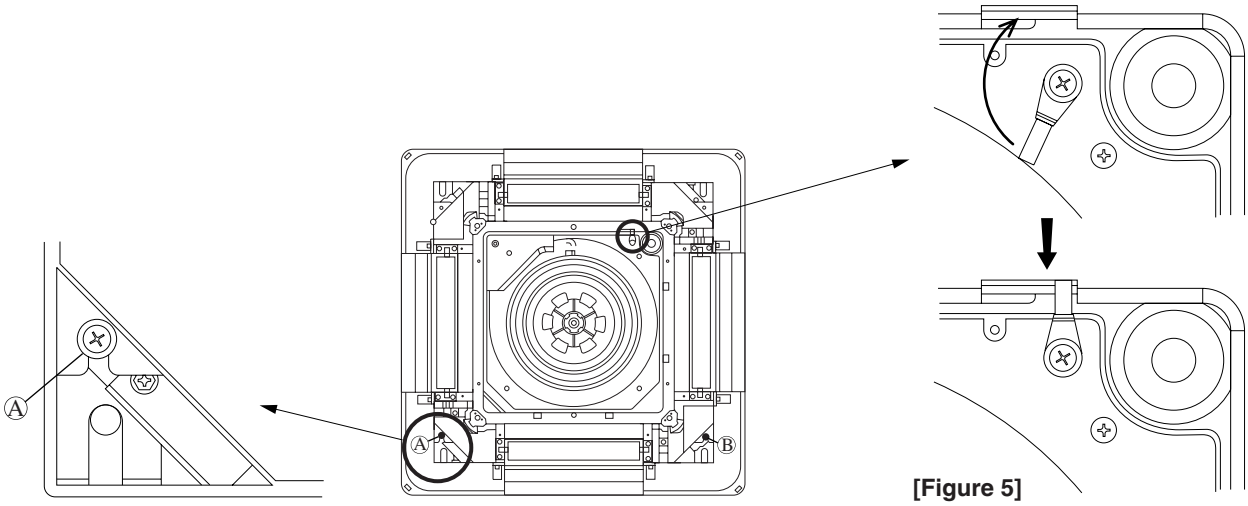

[Figure 4]

[Figure 5]

8) Please rotate a hook, put in the slot on the panel, and carry out fixing the panel temporarily. [Figure 5]

9) Tighten the two bolts used for fixing the panel temporarily and the other two.

10) Please open the lid of a control box.

11) Like drain pump wiring, please band together by the clamp and put in louver motor wiring into a control box. [Figure 6]

12) Please connect a louver motor connector. [Figure 6]

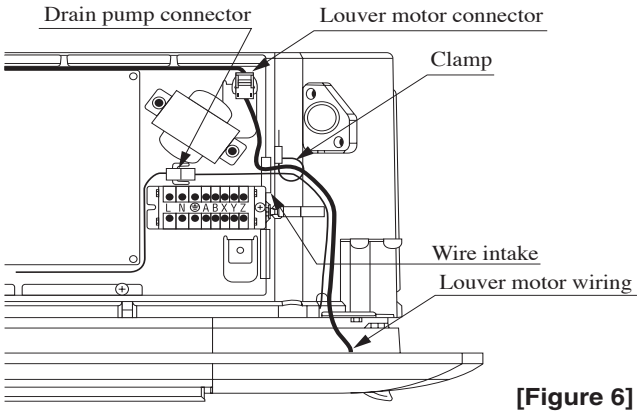

[Figure 6]

13) Attach two chains to the air return grille with two screws. [Figure 7]

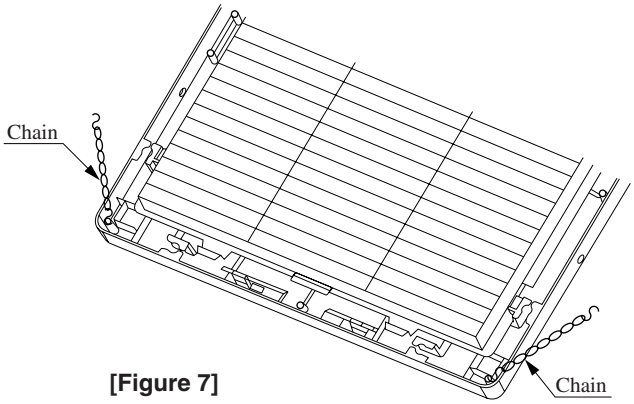

[Figure 7]

14) Replace the corner panels. Please also close a chain with a screw together then.

15) Close the air return grille.

(c) Ceiling cassette-2 way type (FDTW)

(i) Selection of installation location

1) This unit is a ceiling surface direct return air and direct supply air type.

Install the unit a place the allows air to reach every part of the room, in accordance with the shape and heigh of the room.

- **Installation space**

Unit : mm

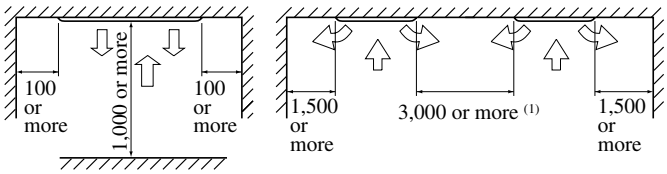

Note (1) This shows the installation interval dimensions between units.

2) This unit permits connecting a branch duct (ϕ200 mm) according to the method shown in the figure below so that air disribution may be improved to the shape of the room. (For the connecting port of the duct, refer to the exterior dimension on page 40 ~ 42.)

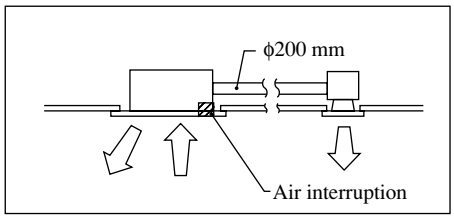

3) Cold air throw

Unit : m

Item \ Models	FDTW28, 45, 56	FDTW71, 90	FDTW112	FDTW140
Standerd	4.0	4.5	4.7	5.0
UHi	4.5	5.0	5.2	5.5

Note (1) The cold air throw is the same in 2 directions.

Conditions:

1.Unit height: 3.0 m above the floor

2.Fan speed: Hi

3.Location: Freee space without obstacle

4.The throw is as the per the table above.

5.Air velocity at the throw: 0.3(m/s)

4) Places where cool or heated air circulates freely. When the installation height exceeds 3.0m, warmed air stays close to the ceiling. In such cases, suggest your client users to install air circulators.

5) Places where perfect drainage can be prepared and sufficient drainage gradient is available.

6) Places free from air disturbances to the return air port and supply hole of the indoor unit, places where the fire alarm may not malfunction to short circuit.

7) If the humidity above the ceiling exceeds 80% or the condensation temperature above the ceiling exceeds 28ºC, affix polyurethane foam (with a thickness to 10 or greater) above the insulation in the ceiling panels.

(Carry out tests of the main unit under the above conditions and confirm that there is no failure. However, if the environment where the unit is installed exceeds the above conditions and the unit is operated in high humidity conditions, there is danger of condensate dripping down. If there is a possibility that the unit will be used under such conditions, dress 10 to 20 mm of insulation material to the main unit, piping and drain pipes.)

8) Places exposed to oil splashes or steam (e.g. kitchens and machine plants.)

Installation and use at such places will incur deteriorations in the performance or corrosion with the heat exchanger or damage in molded synthetic resin parts.

9) Places where corrosive gas (such as sulfurous acid gas) or inflammable gas (thinner, gasoline, etc.) is generated or remains.

Installation and use at such places will cause corrosion in the heat exchanger and damage in molded synthetic resin parts.

10) Place adjacent to equipment generating electromagnetic waves or high-frquency waves such as in hospitals. Generated noise may cause malfunctioning of the controller.

(ii) Preparations for installation

1) Ceiling hole and suspension bolt positions

a) The pattern sheet shrinks or expands as humidity changes, so check the actual size before use.

b) The ceiling hole sizes and suspension bolt sizes are shown in the following figure.

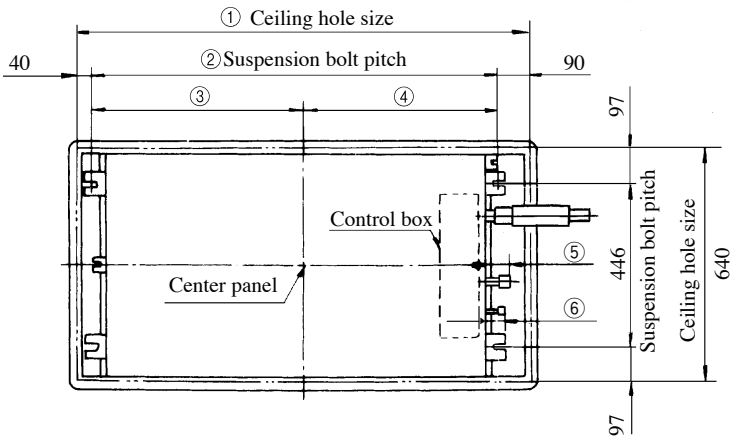

Dimension table

Unit : mm

Mark / Models	①	②	③	④	⑤	⑥
FDTW28, 45, 56	1015	885	468	417	70	60
FDTW71, 90	1260	1130	590	540	82.5	65
FDTW112, 140	1730	1600	825	775	80.5	70

(iii) Installation

For the suspension bolt, use four M10 or W 3/8 bolts and secure so that each bolt can withstand a 490N pullout load.

Use a suspension bolt length that extends approximately 95 mm from the ceiling surface.

A. If there is a ceiling

1) Open the hole in the installation location to the ceiling opening dimensions.
2) Install the suspension bolts (procured locally) at the designated locations.
   (Use care as the center of the spacing for the suspension bolts is not at the center of the panel.)
3) Hang the unit, use the four bolts to mount the pattern paper provided to the panel mounting section and adjust the height.
4) Use a level or transparent hose with water in it to confirm that the unit is level. If the unit is not level, problems such as water leakage or improper operation of the float switch could occur.
5) After confirming the above, secure the unit in position.

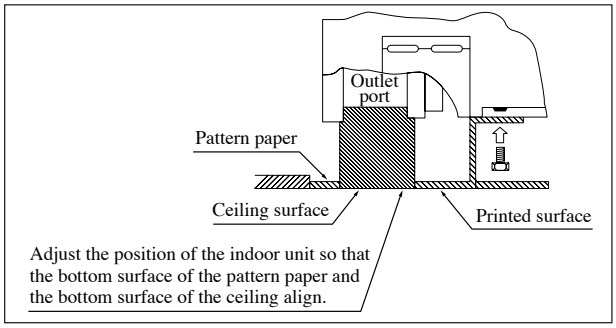

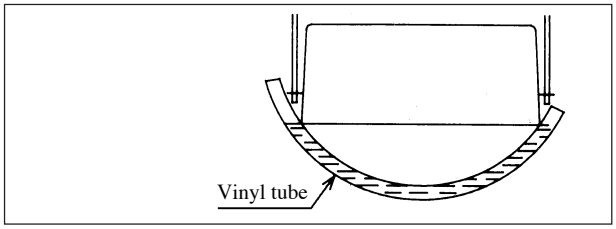

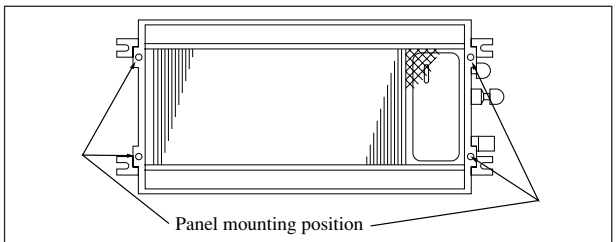

<Panel mounting position>

B. If ceiling is to be installed later

1) Follow steps A2) to A4) in the previous section "A. If there is a ceiling" to install the unit and mount the pattern paper.
2) When the ceiling is installed, the outer perimeter of the pattern paper can be referred to for making the opening in the ceiling.
3) After checking the height and that the unit is level, secure the unit in position.

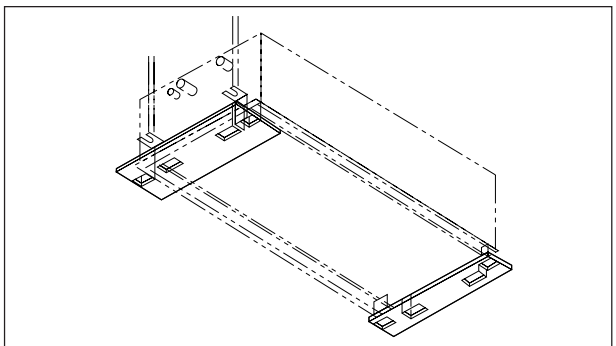

<Pattern paper mounting configuration>

(iv) Drain piping

1) Drain piping should always be in a downhill grade (1/50-1/100) and avoid riding across an elevation or making traps.

- **Good piping**

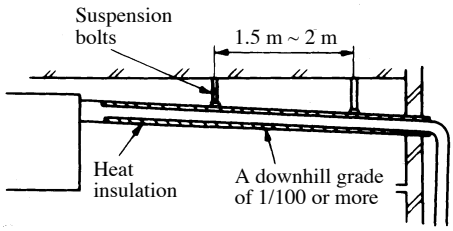

- **Improper piping**

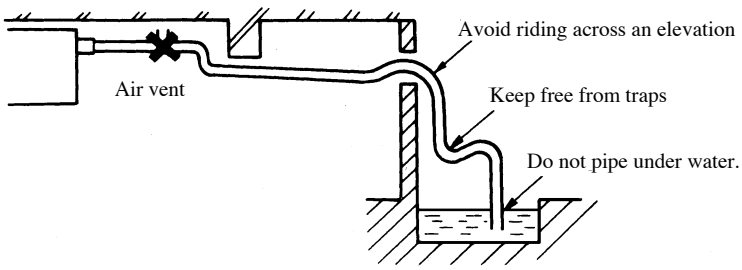

2) When connecting the drain pipe to the unit, pay suffcient attention not to apply excess force to the piping on the unit side. Also, fix the piping at a point as close as possible to the unit.

3) For drain pipe, use hard PVC ganeral purpose pipe VP-20 which can be purchased locally. When connecting, insert a PVC pipe end securely into the drain socket before tightening securly using the attached drain hose and clamp. Adhesive must not be used connection of the drain socket and drain hose (accessory).

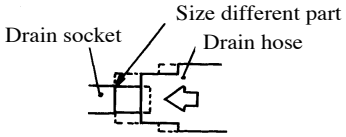

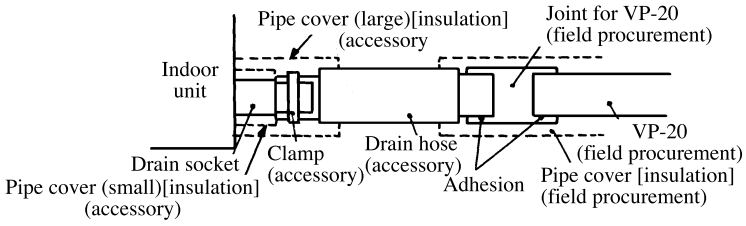

4) When constructing drain piping for several units, position the common pipe about 100mm below the drain outlet of each unit as shown in the sketch below. Use VP-30 or thicker pipe for this pupose.

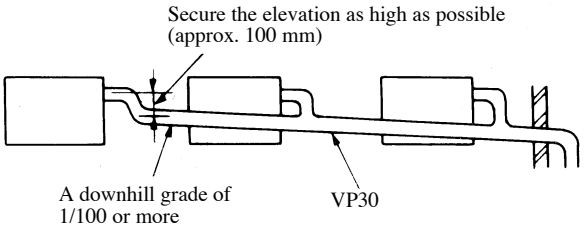

5) Be sure to provide heat insulation to hard PVC pipes of indoor placement.

6) Do not ever provide an air vent.

7) The height of the drain head may be elevated up to a point 750mm above the ceiling and, when an obstacle exists in the ceiling space, elevate the piping to avoid the obstacle using an elbow or corresponding gadget. When doing this, if the stretch for the needed height is too high, the back-fiow quantity of drain at the time of interruption of the operation gets too much and it may cause overflow at the drain pan. Therefore, make the height of the drain pipe within the distance given in the drawing below.

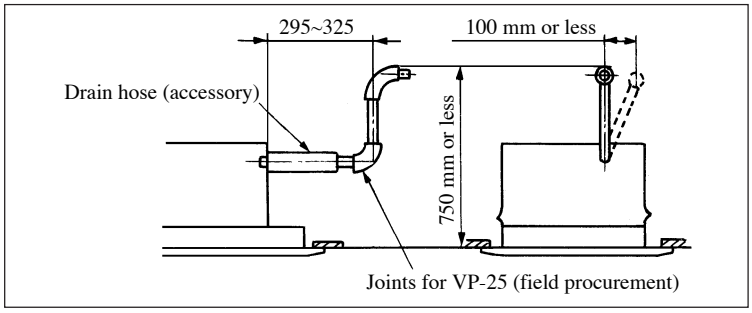

8) Avoid positioning the drain piping outlet at a place where generation of odor may be stimulated. Do not lead the drain piping direct into a sewer from where sulfur gas may generate.

When using a natural drain port

1) Remove the heat insulating material and rubber plug of the natural drain port.

2) By using the natural drain connecting tube (option), connect the drain pipe (VP-20) and completely clamp it with a clamp.
   Note (1) If the drain pipe is directly connected to the natural drain port, the drain pan becomes unremovable.

3) Disconnect the connector CNR (blue, 2P) for the drain motor.

Note (1) If the connector remains connected, drain water is discharged from the standard pipe connecting port, leading to water leakage.

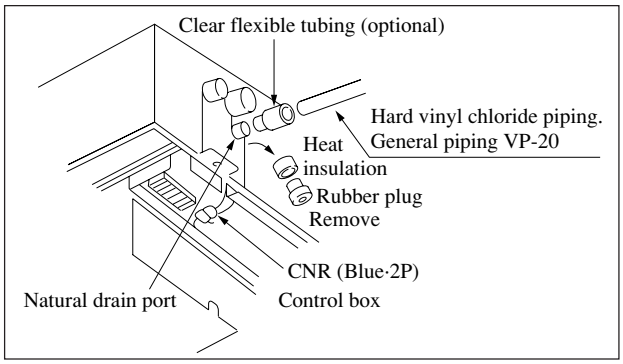

Drainage test

When using the standard drain port, execute a drainage test after completion of electric work.

① During the test run, make sure that drain flows properly through the piping and that no water leaks from connections.

② Be sure to conduct this test even when the unit is installed in the heating season.

③ In case of a new building, conduct the test before it is furnished with the ceiling.

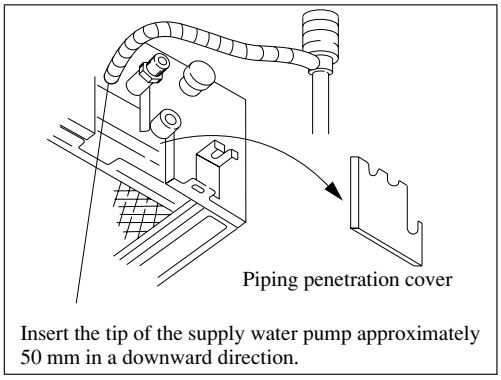

Insert the tip of the supply water pump approximately 50 mm in a downward direction.

1) Inject about 1,000cc by using a feed water pump from the grommet on the drain pump side.
2) At the drain port (transparent portion), check if drainage is performed.
3) After completion of the drain test, completely perform heat insulation fot the drain pipe up to the indoor unit.

Forced drain pump operation

◆ Setup from a unit side.

① In case electrical wiring work finished
Drain pump can be operated by remote controller (wired).
For the operation method, refer to Operation for drain pump in the installation manual for wiring work.

② In case electrical wiring work not finished
Drain pump will run continuously when the dip switch "W7-1" on the indoor unit PCB is turned ON, the Connector CNB is disconnected, and then the power supply (230VAC on the terminal block ① and ②) is turned ON.
Make sure to turn OFF "W7-1" and reconnect the Connector CNB after the test.

◆ Setup from a remote controller side.

Drain pump operation from a remote controller unit is possible. Operate a remote controller unit by following the steps described below.

1. To start a forced drain pump operation

① Press the TEST button for three seconds or longer.
The display will change from "⬍ SELECT ITEM"→ "○ SET"→ " TEST RUN ▼ "

② Press the ▼ button once while " TEST RUN ▼ " is displayed, and cause "DRAIN PUMP ⬍" to be displayed.

③ When the SET button is pressed, a drain pump operation will start.

Display:"DRAIN PUMP RUN"→ "○ → STOP"

2. To cancel a drain pump operation.

① If either SET or ON/OFF button is pressed, a forced drain pump operation will stop.
The air conditioning system will become OFF.

(d) Ceiling cassette-1 way type (FDTS)

Preparation of indoor unit

It can be installed by either one of the following methods. Select the most adequate method for your particular case.

	Ⓐ Standard installation	Ⓑ Higher ceiling
Installation example and limitation	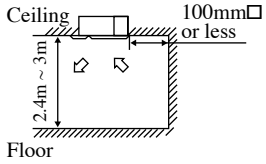	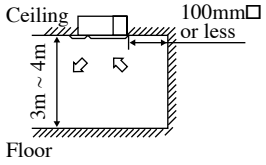

Note (1) In the case of installing on the high ceiling, part of indoor unit requires some modification.

Procedures of rework

Installation on higher ceiling

Adhere the insulation materials attached to the direct blow panel on the blow outlet of indoor unit.

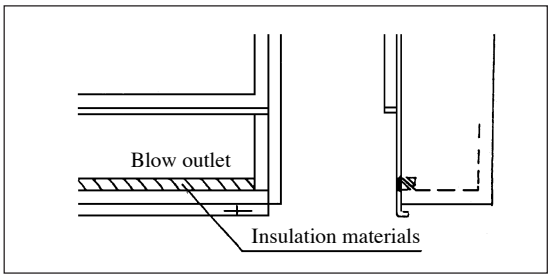

(i) Selection of installation location

1) Where cool and hot air will be distributed sufficiently.

   Where the installation heigh exceeds 3m, warmed air is likely to concentrate close to the ceiling. In such case, you should install also a circulator.

Reference • **Cold air throw**

Unit : m

Item / Models	Reaching distance	
	Standard	Higher ceiling
All models	7	

[Conditions] 1. Unit heigh

Standard ceiling: 2.4~3.0(m) above floor Higher ceiling: 3.0~4.0(m) above floor

2. Fan speed: Hi
3. Place: Free space without obstruction;
4. Reaching distance means the horizontal distance for the wind to reach the floor.
5. Wind velocity at the reaching distance: 0.5m/s

Note (1) Wind capacity is UHi in case of a higher ceiling. It is value of Hi for other cases.

2) Where the ceiling has sufficient rigidity.
3) Where there is no obstacles in front of the suction intel and blow outlet.
4) It should be avoided such places as kitchen, machine factory, etc. where there profuse liquid splashes or thick steam.
5) Where the height of ceiling exceeds 200mm.

6) Where a space as shown below can be secured.

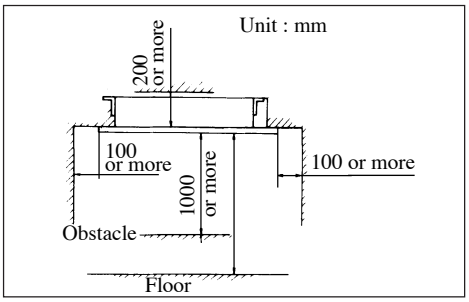

7) It should be avoided where a machine generating high frequency waves is installed.
8) Select a place to branch the piping so that same distance will be a obtained for each of one way piping.
9) If the humidity above the ceiling exceeds 80% or the condensation temperature above the ceiling exceeds 28ºC, affix polyurethane foam (with a thickness to 10 or greater) above the insulation in the ceiling panels.

(Carry out tests of the main unit under the above conditions and confirm that there is no failure. However, if the environment where the unit is installed exceeds the above conditions and the unit is operated in high humidity conditions, there is danger of condensate dripping down. If there is a possibility that the unit will be used under such conditions, dress 10 to 20 mm of insulation material to the main unit, piping and drain pipes.)

10) Where it is convenient for the piping and wiring to the outdoor.
11) Where protected from direct exposure to sun beams.
12) Where it is free from volatile gas generation.

(ii) Standard location

1) Installation

a) Ceiling hole size and position of suspension bolt

Unit : mm

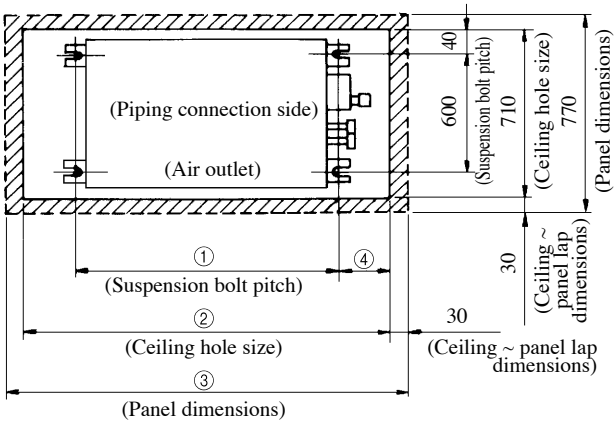

Unit : mm

Models \ Mark	①	②	③	④
FDTS45	990	1230	1290	180
FDTS71	1250	1440	1500	145

b) Length of fixed suspension bolt (customer orderd parts M10)

[Reference] Suspension bolt pitch is adjustable within ± 10mm in sidewise direction. Since there is no adjustment allowance in back and forth direction, determine the position exactly with a measure. (Lap margin between ceiling and panel is 30mm.)

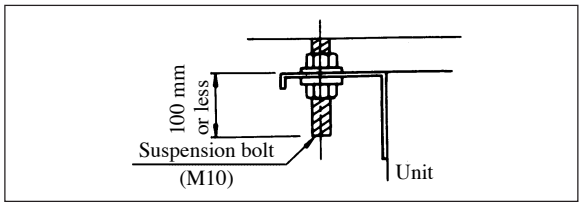

c) Fixing of Suspension bolt. Fix the bolts securely as shown below or by any other adequate means.

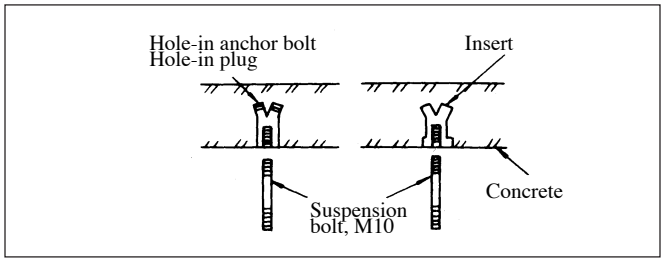

d) Installation

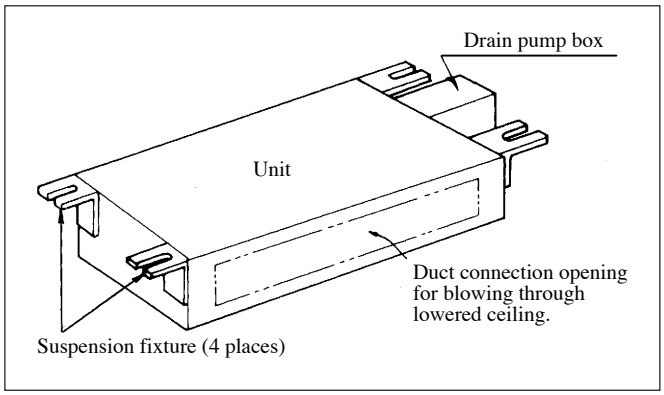

Procedures

① Install nuts on the Suspension bolts at onside. Suspension the suspension fixtures on the Suspension bolts first and then insert the remaining fixtures on the remaining Suspension bolts at and lock them with nuts.

② Since the indoor unit and the panel height cannot be adjusted, adjust the height using an attached pattern before fixing the indoor unit.

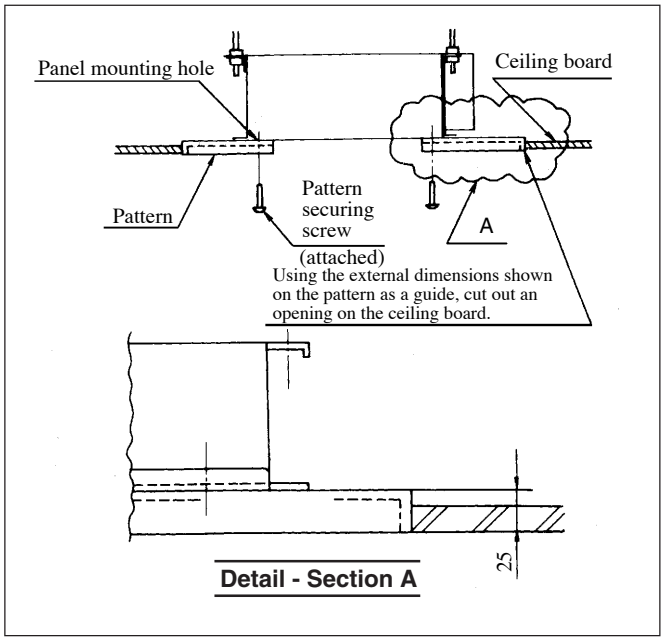

Check of levelness

Check the levelness as follows. Use a level gauge or adjust the levelness with the following method.

- Adjust the bottom of indoor unit and the water level as shown below.

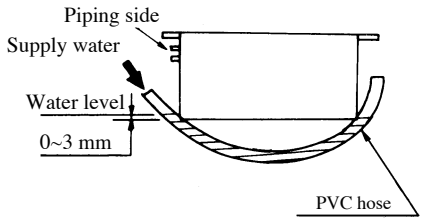

Slightly lower the piping side

2) Drain pipe

a) Set the drain pipe as a declining gradient (1/50 ~ 1/100) and avoid to cross an over-hand ridge or to allow a trap on the way.

● Good piping

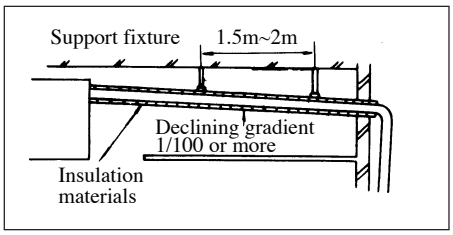

● Improper piping

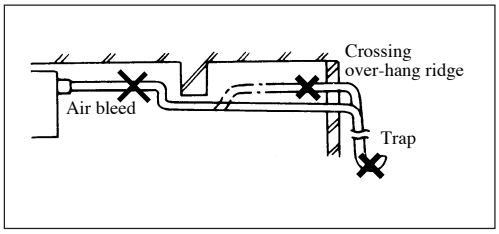

b) When connecting the drain pipe to the unit, pay suffcient attention not to apply excess force to the piping on the unit side. Also, fix the piping at a point as close as possible to the unit.

c) For drain pipe, use hard PVC ganeral purpose pipe VP-20 which can be purchased locally. When connecting, insert a PVC pipe end securely into the drain socket before tightening securly using the attached drain hose and clamp. Adhesive must not be used connection of the drain socket and drain hose (accessory).

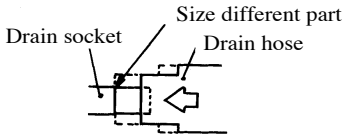

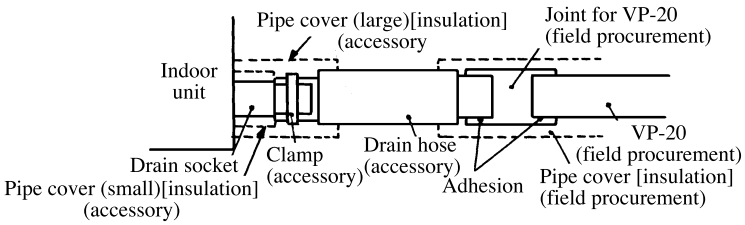

d) When there are plural number of drain pipes, arrange to position the converging pipe at about 100mm below the drain outlet as shown below. Use a pipe of VP-30 or higher for the converging pipe.

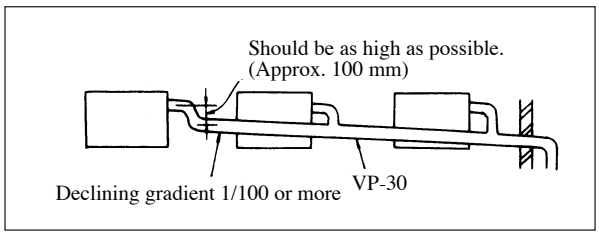

e) Make sure to provide the thermal insulation for the hard vinyl chloride pipe and drain socket provided indoor.

f) Air bleed should not be provided in any event.

- When it is necessary to raise the drain head, the limitation is up to 600mm below the bottom face of ceiling where the unit is installed. The distance is the dimension of the pipe which is installed perpendicularly from a point close to the output for drain pipe connection.

Unit : mm

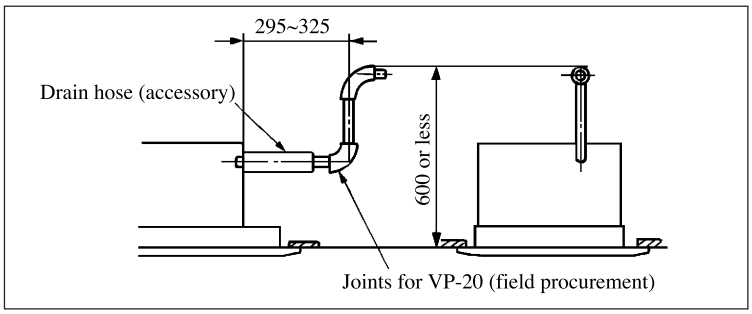

Drain test

[Perform this before installing the ornament panel]

- Perform this upon completion of electrical work.
- Gradually introduce 2,000~3,000cc of water as shown below.

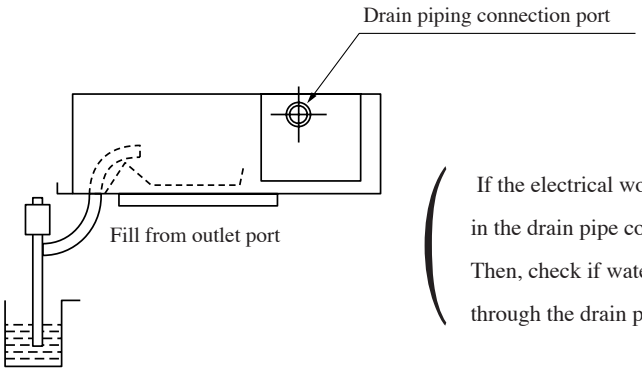

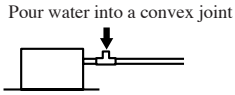

(If the electrical work has not been completed, connect a convex joint in the drain pipe connection to provide a water inlet.
Then, check if water leaks from the piping system and that drain flows through the drain pipe normally.)

- Connect the remote control switch and set to cooling operation. The drain pump will operate with the compressor on.
- Test whether or not the water is draining while listening to the operating sounds of the electric motor for the drain water.

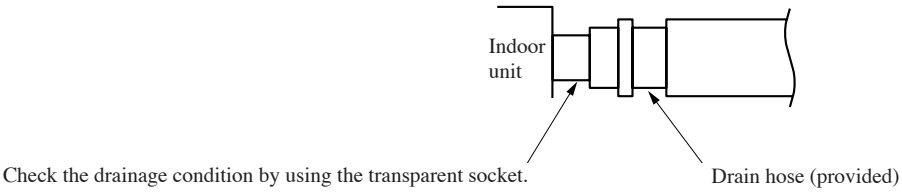

- Check that water is draining smoothly and that there is no water dripping from the connections or other areas.

Forced drain pump operation

◆ Setup from a unit side.

① In case electrical wiring work finished
Drain pump can be operated by remote controller (wired).
For the operation method, refer to Operation for drain pump in the installation manual for wiring work.

② In case electrical wiring work not finished
Drain pump will run continuously when the dip switch "W7-1" on the indoor unit PCB is turned ON, the Connector CNB is disconnected, and then the power supply (230VAC on the terminal block ① and ②) is turned ON.
Make sure to turn OFF "W7-1" and reconnect the Connector CNB after the test.

♦ Setup from a remote controller side.

Drain pump operation from a remote controller unit is possible. Operate a remote controller unit by following the steps described below.

1. To start a forced drain pump operation
   ① Press the TEST button for three seconds or longer.
   The display will change from "AIR CON No SELECT ITEM"→ "○ SET"→ "TEST RUN ▼ "
   ② Press the ▼ button once while "TEST RUN ▼" is displayed, and cause "DRAIN PUMP ⬍" to be displayed.
   ③ When the SET button is pressed, a drain pump operation will start.
   Display: "DRAIN PUMP RUN"→ "○ → STOP"
2. To cancel a drain pump operation.
   ① If either SET or ON/OFF button is pressed, a forced drain pump operation will stop. The air conditioning system will become OFF.

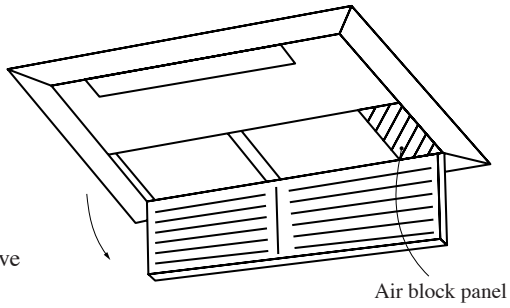

Mounting the Panel

① Open the air return grille and remove the air block panel from the inside. (Remove the 2 screws.)

② Mount the two (M5 x 35) panel mounting screws to the indoor unit

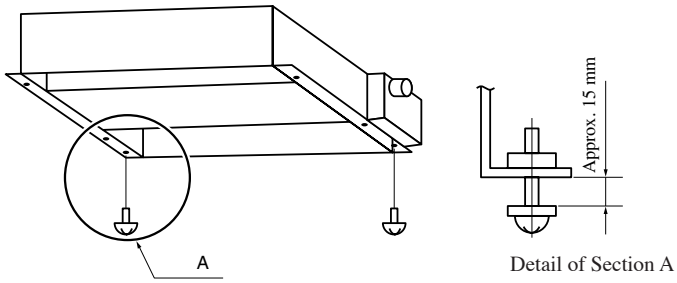

③ Hang the panel on the two mounting screws on the indoor unit by using the two ♁ shaped holes. Slide the panel approximately 10 mm. Use the 5 panel mounting screws to secure the panel.

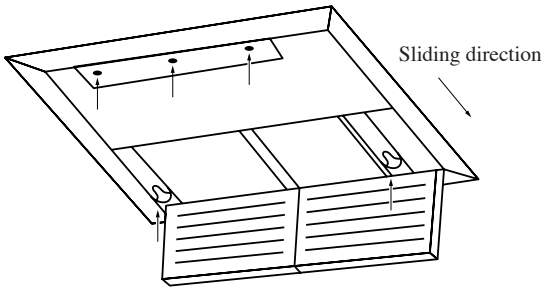

④ Use the opening to connect the connectors for the louver motor and limit switches.

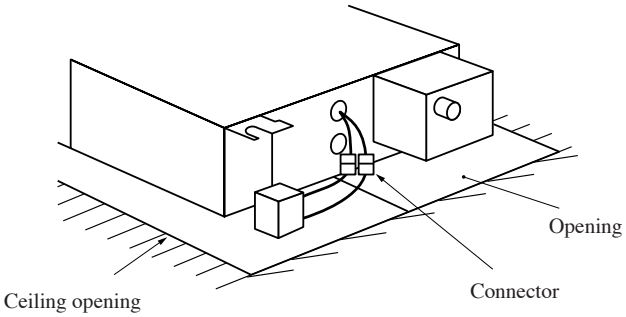

⑤ Reinstall the wind shield plate.

(iii) Installation on higher ceiling

Adhere the insulation materials on the blow outlet of the indoor unit. All others are same as the standard installation.

(e) Ceiling cassette-1 way compact type (FDTQ)

(i) Avoid the following locations for installation and uses

1) Locations where oil splashes and moisture are abundant (e.g., kitchens, mechanical workshops).
   These locations may result in corrosion and lower performance of the heat exchanger and cause damage to plastic parts.
2) Locations with corrosive gases (such as sulfurous acid gas), flammable gases (such as thinners, gasoline) and areas where there are possibilities of gas accumulation. These locations can result in corrosion of the heat exchanger and damage plastic parts. Also, the flammable gas could cause a fire.
3) Locations near medical equipment radiating electromagnetic waves in hospitals or other facilities, and around appliances emitting high frequencies. The electromagnetic noise may cause the controller to malfunction.
4) Locations exposed to sea breezes (seaside areas). Sea breezes may cause corrosion of the outer frame and the heat exchanger.

(ii) Installation space for the indoor unit

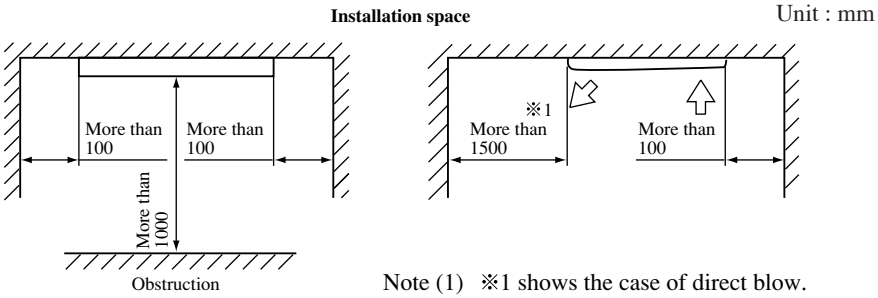

Note (1) ※1 shows the case of direct blow.

1) With the customer's consent, select a suitable location according to the following conditions.
   - Where cool air or hot air can easily pass through.
     If the height of the location exceeds 3 m, hot air will gather below the ceiling. Suggest to the customer to also install a circulation fan.
   - Where wiring and plumbing to outdoor areas may easily be conducted.
   - Where water can be completely drained. A sloping location for drainage.
   - Where there is no wind disturbance to the air return and air suplly, the fire alarm will not be set off erroneously, and no air short circuits occur.
   - Where there is no direct sunlight.
   - If the humidity above the ceiling exceeds 80% or the condensation temperature above the ceiling exceeds 28ºC, affix polyurethane foam (with a thickness to 10 or greater) above the insulation in the ceiling panels.

     (Carry out tests of the main unit under the above conditions and confirm that there is no failure. However, if the environment where the unit is installed exceeds the above conditions and the unit is operated in high humidity conditions, there is danger of condensate dripping down. If there is a possibility that the unit will be used under such conditions, dress 10 to 20 mm of insulation material on the main unit, piping and drain pipes.)
2) Consider the supporting strength of the location. If the strength is not sufficient to sustain the unit weight, use reinforcing materials.

(iii) Suspending the unit

Use four (4) M10 or W3/8 suspension bolts. Secure them firmly so that each can withstand a pull-out load of 490N.

Adjust their length to approximately 40 mm from the ceiling.

● For TQ-PSA-15W-E panel

Unit : mm

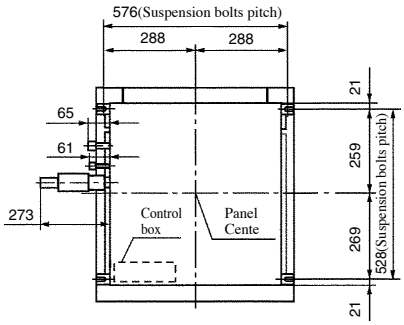

● For TQ-PSB-15W-E panel

Unit : mm

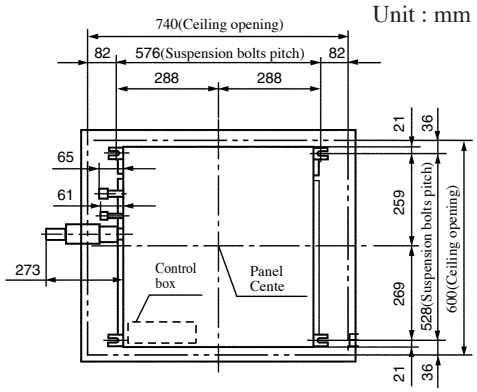

1) When hanging from the ceiling

a) The panel has two types: for 2 × 2 grid ceiling and for conventional ceiling.

① When installing on a 2 × 2 grid ceiling, put in the unit on an angle, or hang the unit with the T bar temporarily removed.

When installing on a conventional ceiling, cut an installation opening (740 mm × 600 mm) in the ceiling, and hang the unit.

b) Set the suspension bolts (to be prepared at job site) in place.

c) Adjust the unit's height so that the bottom surface of the unit is on the same level as the ceiling (bottom surface of the T bar). (The blow outlet is contained in the ceiling.)

The allowable difference in height between the bottom surface of the ceiling and that of the indoor unit is when the indoor unit face is no higher than 5 mm.

Caution

Do not install the indoor unit lower than the bottom surface of the ceiling.

● For TQ-PSA-15W-E panel

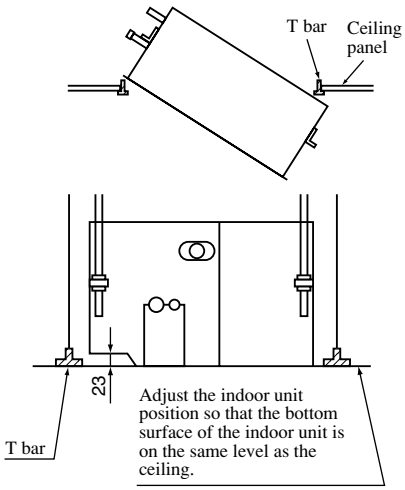

● For TQ-PSB-15W-E panel

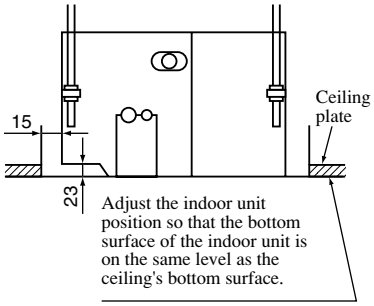

d) Level the unit using a hose filled with water. If the unit is out of level, water leaks or malfunctioning of the floating switch may occur.

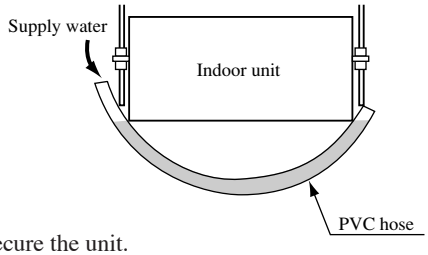

e) After ensuring the above, secure the unit.

2) When embedded into ceiling

a) Install the unit following steps b) and c) of the above part 1).

b) When installing on a conventional ceiling, cut an installation opening (740 mm × 600 mm) in the ceiling.

c) Check the installation height and level, and after that, secure the unit.

(iv) Drain piping

1) Drain piping should always be in a downhill grade (1/50-1/100) and avoid riding across an elevation or making traps.

- **Good piping**

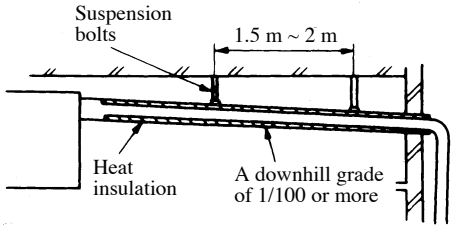

- **Improper piping**

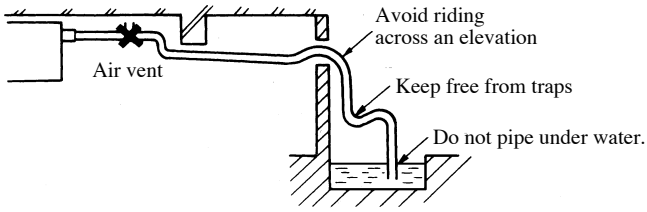

2) When connecting the drain pipe to the unit, pay suffcient attention not to apply excess force to the piping on the unit side. Also, fix the piping at a point as close as possible to the unit.

3) For drain pipe, use hard PVC ganeral purpose pipe VP-20 which can be purchased locally. When connecting, insert a PVC pipe end securely into the drain socket before tightening securly using the attached drain hose and clamp. Adhesive must not be used connection of the drain socket and drain hose (accessory).

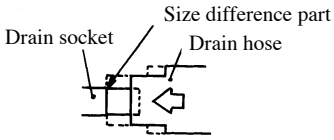

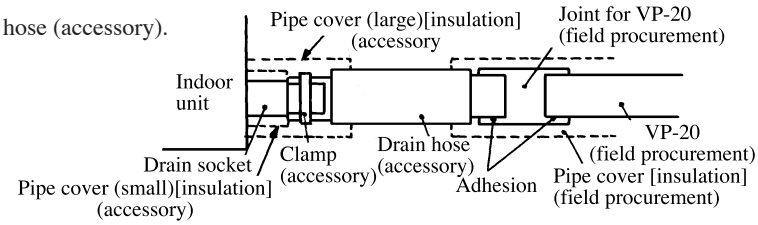

4) When constructing drain piping for several units, position the common pipe about 100mm below the drain outlet of each unit as shown in the sketch below. Use VP-30 or thicker pipe for this pupose.

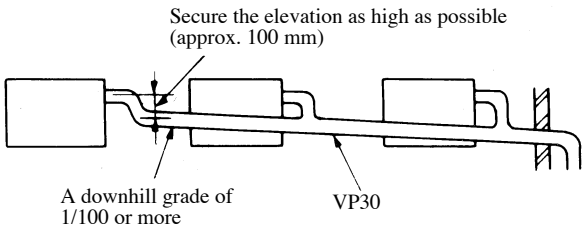

5) Be sure to provide heat insulation to hard PVC pipes of indoor placement.
6) Do not ever provide an air vent.
7) The height of the drain head may be elevated up to a point 600mm above the ceiling and, when an obstacle exists in the ceiling space, elevate the piping to avoid the obstacle using an elbow or corresponding gadget. When doing this, if the stretch for the needed height is too high, the back-fiow quantity of drain at the time of interruption of the operation gets too much and it may cause overflow at the drain pan. Therefore, make the height of the drain pipe within the distance given in the drawing below.

Unit : mm

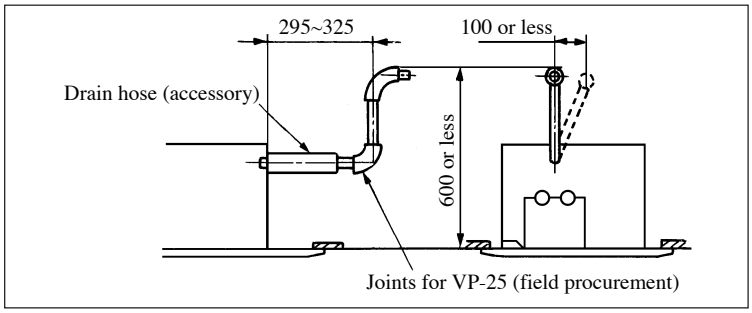

8) Avoid positioning the drain piping outlet at a place where generation of odor may be stimulated. Do not lead the drain piping direct into a sewer from where sulfur gas may generate.

(v) Drain test (Perform the drain test after the electrical wiring work has been finished.)

- Check that water is draining thoroughly during the test run, and that there are no water leaks from the joints.
- The test has to be performed even if the unit is installed in a season when the unit is used for heating.
- In a new house, perform the test before the ceiling is fitted.

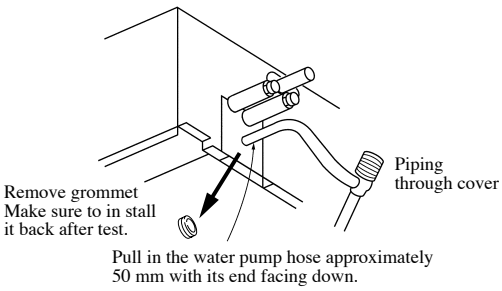

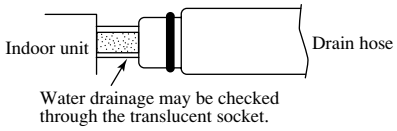

1) Remove the grommet, and using a water pump, pour about 1000cc of water, from the position shown in the left figure.
   Caution
   When pouring water, be sure to perform the drain pump forced operation.
2) Check the drain-out section (transparent section) for normal flow of drainage.
3) Take off the drain plug to release the water. After water release has been confirmed, replace the drain plug as it was.
   * Be careful not to get splashed when pulling the drain plug.
4) After the drain test, thoroughly insulate the drain pipe, up to the main unit.

Forced drain pump operation

◆ Setup from a unit side.

① In case electrical wiring work finished
Drain pump can be operated by remote controller (wired).
For the operation method, refer to Operation for drain pump in the installation manual for wiring work.

② In case electrical wiring work not finished
Drain pump will run continuously when the dip switch “W7-1” on the indoor unit PCB is turned ON, the Connector CNB is disconnected, and then the power supply (230VAC on the terminal block ① and ②) is turned ON.
Make sure to turn OFF “W7-1” and reconnect the Connector CNB after the test.

♦ Setup from a remote controller side.

Drain pump operation from a remote controller unit is possible. Operate a remote controller unit by following the steps described below.

1. To start a forced drain pump operation

   ① Press the TEST button for three seconds or longer.

   The display will change from "⬍ SELECT ITEM"→ "○ SET"→ "TEST RUN ▼ "

   ② Press the ▼ button once while "TEST RUN ▼ " is displayed, and cause "DRAIN PUMP ⬍ " to be displayed.

   ③ When the SET button is pressed, a drain pump operation will start.

   Display:"DRAIN PUMP RUN"→ "○ → STOP"

2. To cancel a drain pump operation.

   ① If either SET or ON/OFF button is pressed, a forced drain pump operation will stop.

   The air conditioning system will become OFF.

(vi) Panel installation (Panel installing bolts are attached to the panel.)

① Check that the indoor unit's height and opening dimensions in the ceiling are correct.

② Check that level is ensured.

③ Open the air return grill.

④ Screw in two of the four suspension bolts attached to the panel, on the piping side and at its opposite angle, by a little less than 5 mm (● marks).

⑤ Hook the panel into two of the suspension bolts to pre-install it.

With pre-installation is performed, first hook the panel to bolt A, then to bolt B while rotating the panel.

(Take care so that the unit does not rotate during pre-installation.)

⑥ Tighten the pre-installed suspension bolts and two remaining suspension bolts.

⑦ Attach the louver motor connector (white, 2P) and the limit switch connector (Blue, 2P).

⑧ Use the provided screws to tighten chains to the panel. Chain installing screws is contained in the same bag as suspension bolts.

⑨ Close the air return grill. Now installation is complete.

⑩ When the louver motor does not operate with the remote control, check connections of the connectors, turn off the power for more than 10 seconds and reset.

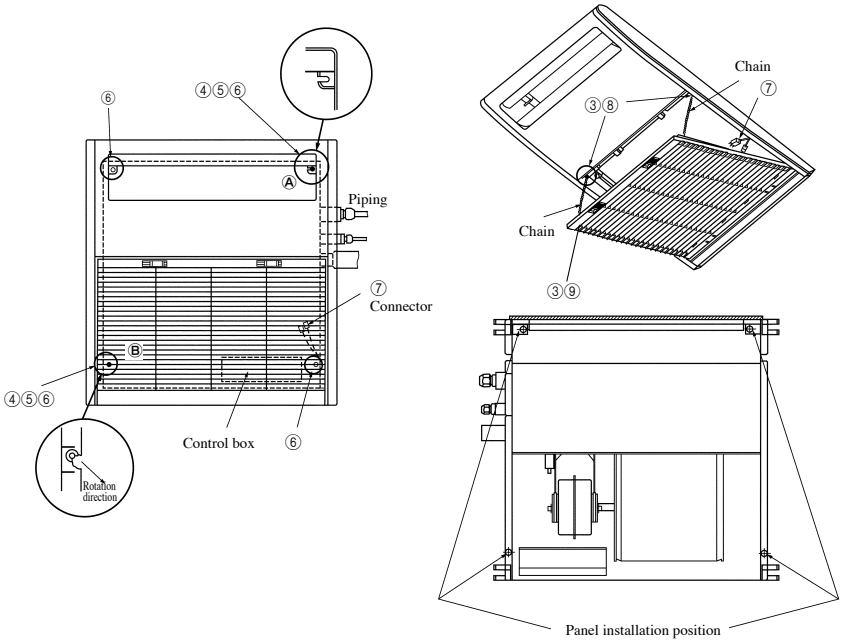

(vii) Indoor unit repair procedure for duct connection

1) Drill hole for duct

a) While referring to the following dimensions, notch the insulation. (The insulation is equipped with the marks in advance.)

b) Cut joints for the hole, and drill hole.

c) Connect the duct joint using screws attached to the panel.

Unit : mm

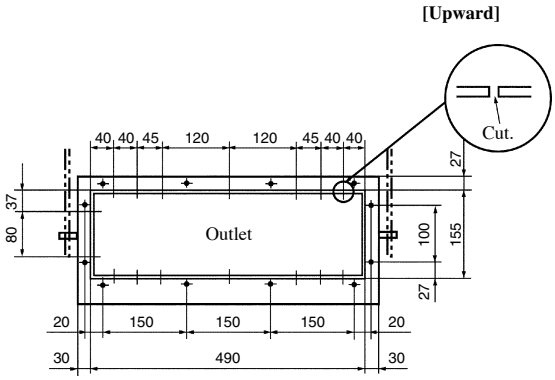

d) Connect the bottom plate using screws attached to the panel.

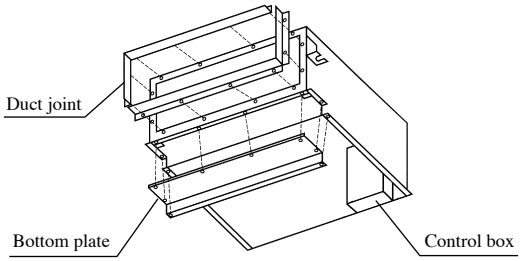

e) Blower fan tap switch

The following two methods are available in switching the blower fan tap. Switch to the high-speed tap with one of these methods.

① By means of function setting from the remote control unit, set the setting ⓒ of "I/U FUNCTION ▲" (indoor unit function) to "Hi CEILING 1" (high-speed tap) as shown right.

Function number Ⓐ	Function description Ⓑ	Setting Ⓒ
02	Hi CEILING SET	Hi CEILING 1

For the details of operating procedures, please refer to the installation manual of your remote control unit.

f) LOUVER switch disabled setting

By means of function setting from the remote control unit, set the setting ⓒ of "FUNCTION ▲" (remote control unit function) to "INVALID" (LOUVER switch disabled) as shown right.

Function number Ⓐ	Function description Ⓑ	Setting Ⓒ
07	LOUVER S/W	INVALID

For the details of operating procedures, please refer to the installation manual of your remote control unit.

2) Duct work

a) Calculate air flow volume and the outside static pressure to select the duct's length and shape, and air supply outlet.

Caution

Take care that the outside static pressure does not exceed 30 Pa.

The unit has condensation owing to the decrease in air capacity, possibly causing the ceiling and household goods to become wet.

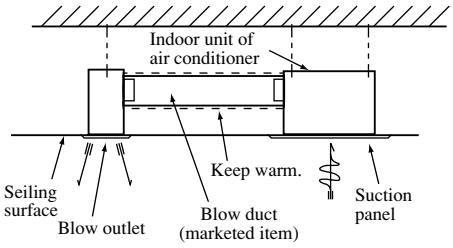

b) Reduce the number of bends as much as possible. (Corner R should be as large as possible.)

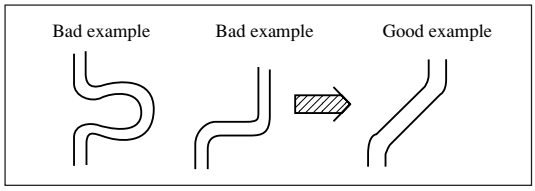

c) Connecting the air return duct

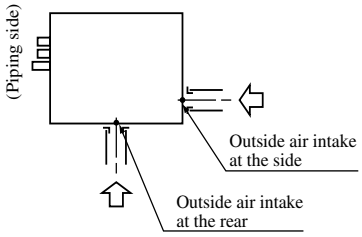

d) Outside air intake

- Use the intake, which is easier for work, either at the rear or the side.

e) Duct connection

- Connect the 125 mm diameter round duct, using the air return/supply duct flange separately sold (for connecting the 125 mm diameter round duct). (Band clamp)
- Keep the duct warm to protect from condensation.

f) Checking of indoor unit installation level

① There are two kinds of panel, which are TQ-PSA-15W-E panel and TQ-PSB-15W-E panel. When installing to the existing ceiling, check that opening dimensions in the ceiling are correct.

Check the installation level of the air-conditioner indoor unit and the ceiling members.

② Adjust the air-conditioner indoor unit height so that the under surface of the indoor unit and the under surface of the ceiling agree with each other. (The air supply port shall be housed in the ceiling.)

③ The allowable height difference between the under surface of the ceiling and the under surface of the indoor unit is less than 5 mm upward shift of the indoor unit.

Do not install the indoor unit lower than the bottom surface of the ceiling.

● For QR-PNA-14W-ER panel

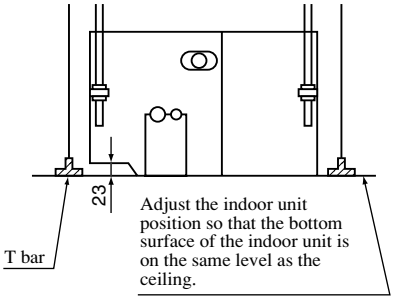

● For QR-PNB-14W-ER panel

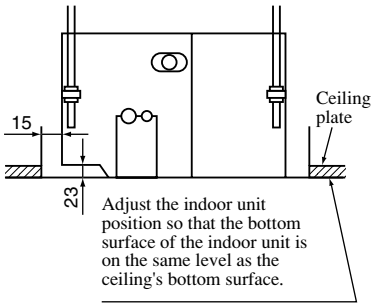

g) Panel installation

① Insert a flat head screw driver, etc. into the slot on the air supply port cover of the panel to remove the cover from the panel.

② Open air return grill.

③ Screw in two of the four suspension bolts attached to the panel, on the piping side and at its opposite angle, by a little less than 5 mm (● marks).

④ Hook the panel into two of the suspension bolts to pre-install it.
With pre-installation is performed, first hook the panel on the bolt A Then to the bolt B .While rotating the panel. (Take care so that the unit does not rotate during pre-installation.)

⑤ Tighten the pre-installed suspension bolts and tow remaining suspension bolts.

⑥ Use the provided screws to tighten chains to the panel. Chain installing screws is contained in the same bag as suspension bolts.

⑦ Close the air return grill. (Check whether the chain is installed securely.)

⑧ Push the air supply cover into place from the bottom of the panel, and fit it as it was.
Check that the air supply cover is securely fitted and does not fall.

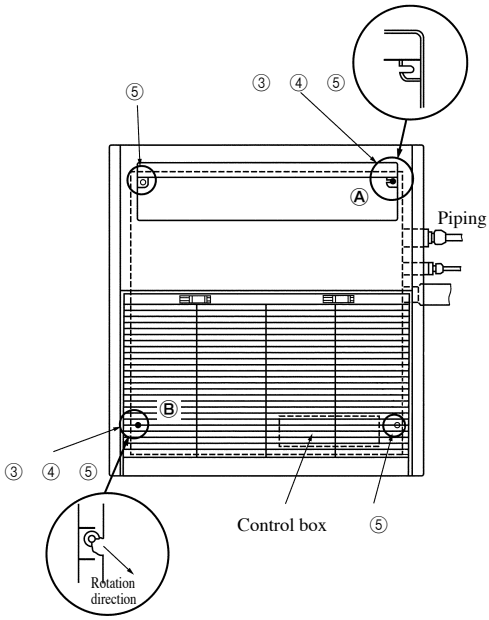

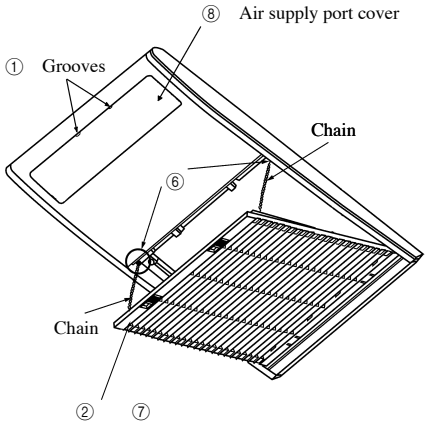

(f) Duct connected-High static pressure type (FDU)

(i) Selection of installation location

① Select the suitable areas to install the unit under approval of the user.

- Areas where the indoor unit can deliver hot and cold wind sufficiently. Suggest to the user to use a circulator if the ceiling height is over 3m to avoid warm air being accumulated on the ceiling.
- Areas where there is enough space to install and service.
- Areas where it can be drained properly. Areas where drain pipe descending slope can be taken.
- Areas where there is no obstruction of airflow on both air return grille and air supply port.
- Areas where fire alarm will not be accidentally activated by the air conditioner.
- Areas where the supply air does not short-circuit.
- Areas where it is not influenced by draft air.
- Areas not exposed to direct sunlight.
- Areas where dew point is lower than around 28ºC and relative humidity is lower than 80%.

  (This indoor unit is tested under the condition of JIS (Japan Industrial Standard) high humidity condition and confirmed there is no problem. However, there is some risk of condensation drop if the air conditioner is operated under the severer condition than mentioned above.
  If there is a possibility to use it under such a condition, attach additional insulation of 10 to 20mm thick for entire surface of indoor unit, refrigeration pipe and drain pipe.)
- Areas where TV and radio stays away more than 1m. (It could cause jamming and noise.)
- Areas where any items which will be damaged by getting wet are not placed such as food, table wares, server, or medical equipment under the unit.
- Areas where there is no influence by the heat which cookware generates.
- Areas where not exposed to oil mist, powder and/or steam directly such as above fryer.
- Areas where lighting device such as fluorescent light or incandescent light doesnít affect the operation.
  (A beam from lighting device sometimes affects the infrared receiver for the wireless remote controller and the air conditioner might not work properly.)

② Check if the place where the air conditioner is installed can hold the weight of the unit. If it is not able to hold, reinforce the structure with boards and beams strong enough to hold it. If the strength is not enough, it could cause injury due to unit falling.

Space for installation and service

- Make installation altitude over 2.5m.
  (Indoor Unit)

Installation Space

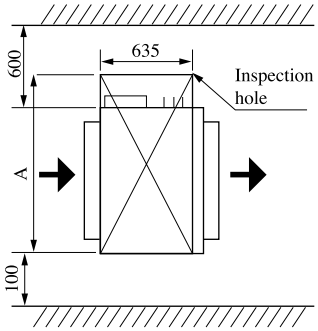

UNIT: mm

	71	90, 112, 140
A	1200	1720

(ii) Preparation before installation

① If suspension bolt becomes longer, do reinforcement of earthquake resistant.

ⓐ For grid ceiling

When suspension bolt length is over 500mm, or the gap between the ceiling and roof is over 700mm, apply earthquake resistant brace to the bolt.

ⓑ In case the unit is hanged directly from the slab and is installed on the ceiling plane which has enough strength. When suspension bolt length is over 1000mm, apply the earthquake resistant brace to the bolt.

② Prepare four (4) sets of suspension bolt, nut and spring washer (M10 or M8) on site.

Suspension bolt location

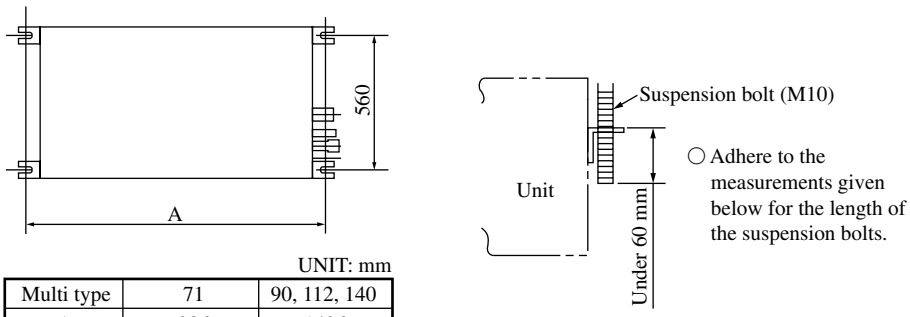

UNIT: mm

Multi type	71	90, 112, 140
A	986	1406

Pipe locations UNIT: mm

Model: 71

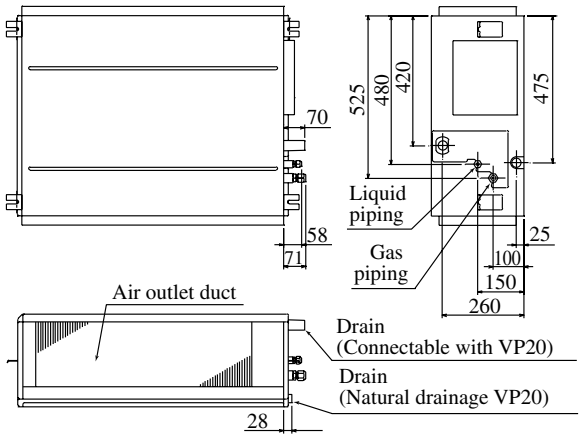

Models: 90, 112, 140

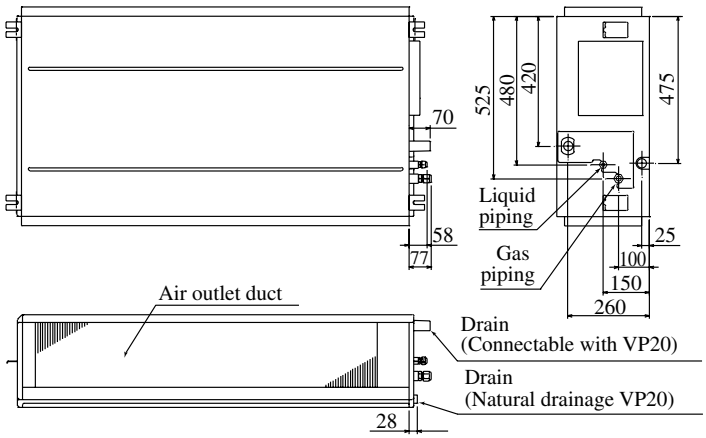

(iii) Installation of indoor unit

Installation

[Hanging]
Hang the unit up.

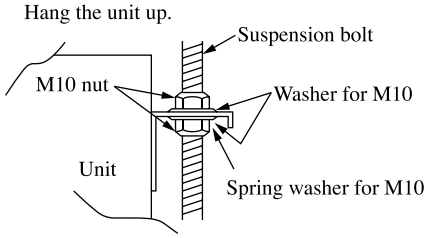

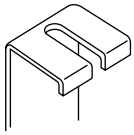

If the measurements between the unit and the ceiling hole do not match upon installation, it may be adjusted with the long holed installation tool.

Adjustment for horizontality

○ Either use a level vial, or adjust the level according to the method below.

● Adjust so the bottom side of the unit will be leveled with the water surface as illustrated below.

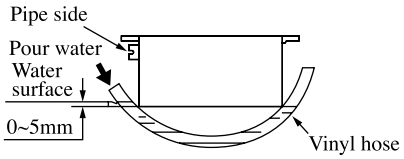

Let the pipe side be slightly sloped.

○ If the unit is not leveled, it may cause malfunctions or inoperation of the float switch.

(iv) Duck Work

A corrugated board (for preventing sputtering) is attached to the main body of the air conditioner (on the outlet port). Do not remove it until connecting the duct.

① The air conditioner main unit does not have an air filter. Incorporate it into the easy-to-clean suction grille.

② Blowout duct

- The ducts should be at their minimum lengths.
- Keep the bends to a minimum. (The bending radius should be as large as possible.)

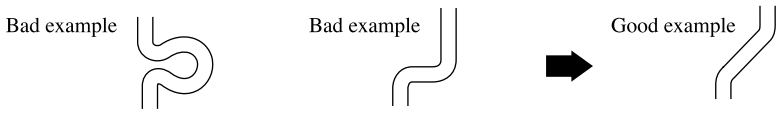

- Conduct the duct work before ceiling attachment.

③ Suction duct

- Make sure to insulate the duct to prevent dewing on it.

④ Location and form of blow outlet should be selected so that air from the outlet will be distributed all over the room, and equipped with a device to control air volume.

⑤ Make sure provide an inspection hole on the ceiling. It is indispensable to service elecric equipment, motor, functional components and cleaning of heat exchanger.

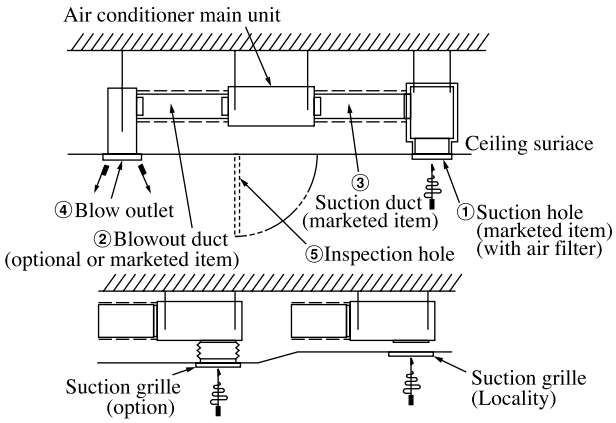

Bad example of duct work

① If a duct is not provided at the suction side but it is substituted with the space over the ceiling, humidity in the space will increase by the influence of capacity of ventilation fan, strength of wind blowing against the out door air louver, weather (rainy day) and others.

a) Moisture in air is likely to condense over the external plates of the unit and to drip on the ceiling. Unit should be operated under the conditions as listed in the above table and within the limitation of wind volume. When the building is a concrete structure, especially immediately after the construction, humidity tends to rise even if the space over the ceiling is not substituted in place of a duct. In such occasion, it is necessary to insulate the entire unit with glass wool (25mm). (Use a wire net or equivalent to hold the glass wool in place.)

b) It may run out the allowable limit of unit operation (Example: When outdoor air temperature is 35˚C DB, suction air temperature is 27˚C WB) and it could result in such troubles as compressor overload, etc.

c) There is a possibility that the blow air volume may exceed the allowable range of operation due to the capacity of ventilation fan or strength of wind blowing against external air louver so that drainage from be heat exchanger may fall to reach the drain pan but leak outside (Example: drip on to the ceiling) with consequential water leakage in the room.

② If vibration damping is not conducted between the unit and the duct, and between the unit and the slab, vibration will be transmitted to the duct and vibration noise may occur. Also, vibration may be transmitted from the unit to the slab. Vibration damping must be performed.

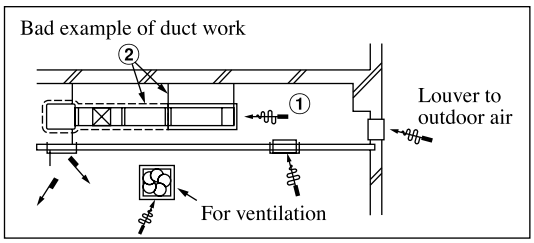

(v) Refrigerant pipe

Caution

① Use the new refrigerant pipe.
When re-using the existing pipe system for R22 or R407C, pay attention to the following items.
• Change the flare nuts with the attached ones (JIS category 2), and reprocess the flare parts.
• Do not use thin-walled pipes.

② Use phosphorus deoxidized copper alloy seamless pipe (C1220T specified in JIS H3300) for refrigeration pipe installation.
In addition, make sure there is no damage both inside and outside of the pipe, and no harmful substances such as sulfur, oxide, dust or a contaminant stuck on the pipes.

③ Do not use any refrigerant other than R410A.
Using other refrigerant except R410A (R22 etc.) may degrade inside refrigeration oil. And air getting into refrigeration circuit may cause over-pressure and resultant it may result in bursting, etc.

④ Store the copper pipes indoors and seal the both end of them until they are brazed in order to avoid any dust, dirt or water getting into pipe. Otherwise it will cause degradation of refrigeration oil and compressor breakdown, etc.

⑤ Use special tools for R410 refrigerant.

Piping work

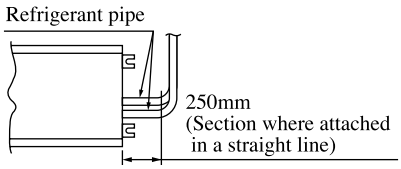

When conducting piping work, make sure to allow the pipes to be aligned in a straight line for at least 250 mm, as shown in the left illustration. (This is necessary for the drain pump to function)

Work procedure

① Remove the flare nut and blind flanges on the pipe of the indoor unit.
   * Make sure to loosen the flare nut with holding the nut on pipe side with a spanner and giving torque to the nut with another spanner in order to avoid unexpected stress to the copper pipe, and then remove them.
   (Gas may come out at this time, but it is not abnormal.)
   ● Pay attention whether the flare nut pops out. (as the indoor unit is sometimes pressured.)

② Make a flare on liquid pipe and gas pipe, and connect the refrigeration pipes on the indoor unit.
   * Bend the pipe with as big radius as possible and do not bend the pipe repeatedly. In addition, do not twist and crush the pipes.
   * Do a flare connection as follows:
     a) Make sure to loosen the flare nut with holding the nut on pipe side with a spanner and giving torque to the nut with another spanner in order to avoid unexpected stress to the copper pipe, and then remove them.
     b) When fastening the flare nut, align the refrigeration pipe with the center of flare nut, screw the nut for 3-4 times by hand and then tighten it by spanner with the specified torque mentioned in the table below. Make sure to hold the pipe on the indoor unit securely by a spanner when tightening the nut in order to avoid unexpected stress on the copper pipe.

③ Cover the flare connection part of the indoor unit with attached insulation material after a gas leakage inspection, and tighten both ends with attached straps.
   ● Make sure to insulate both gas pipes and liquid pipes completely.
   * Incomplete insulation may cause dew condensation or water dropping.

④ Refrigerant is charged in the outdoor unit.
   As for the additional refrigerant charge for the indoor unit and piping, refer to the installation manual attached to the outdoor unit.

Pipe diameter	Tightening torque N·m
ϕ6.35	14 to 18
ϕ9.52	34 to 42
ϕ12.7	49 to 61
ϕ15.88	68 to 82
ϕ19.05	100 to 120

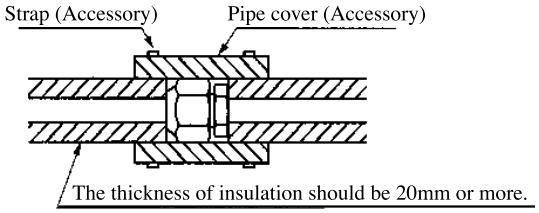

(vi) Drain pipe

Caution

① Install the drain pipe according to the installation manual in order to drain properly.
   Imperfection in draining may cause flood indoors and wetting the household goods, etc.

② Do not put the drain pipe directly into the ditch where toxic gas such as sulfur, the other harmful andinflammable gas is generated. Toxic gas would flow into the room and it would cause serious damage to userís health and safety (some poisoning or deficiency of oxygen). In addition, it may cause corrosion of heat exchanger and bad smell.

③ Connect the pipe securely to avoid water leakage from the joint.

④ Insulate the pipe properly to avoid condensation drop.

⑤ Check if the water can flow out properly from both the drain outlet on the indoor unit and the end of the drain pipe after installation.

⑥ Make sure to make descending slope of greater than 1/100 and do not make up-down bend and/or trap in the midway. In addition, do not put air vent on the drain pipe. Check if water is drained out properly from the pipe during commissioning. Also, keep sufficient space for inspection and maintenance.

Work procedure

① Insert the supplied drain hose (the end made of soft PVC) to the step of the drain socket on the indoor unit and fix it securely with the clamp.
   a) Do not apply adhesives on this end.
   b) Do not use acetone-based adhesives to connect to the drain socket.

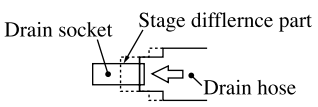

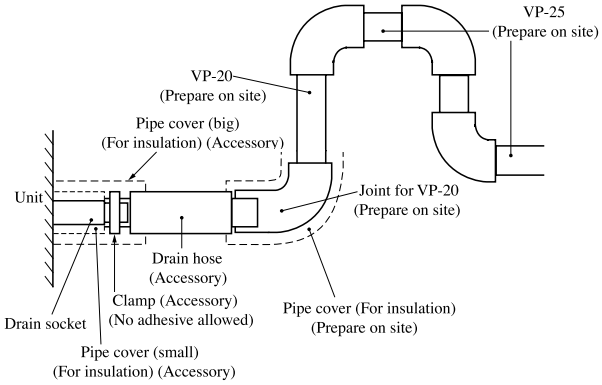

② Prepare a joint for connecting VP-20 pipe, adhere and connect the joint to the drain hose (the end made of rigid PVC), and adhere and connect VP-20 pipe (prepare on site).

* As for drain pipe, apply VP-20 made of rigid PVC which is on the market.

a) Make sure that the adhesive will not get into the supplied drain hose.
It may cause the flexible part broken after the adhesive is dried up and gets rigid.

b) The flexible drain hose is intended to absorb a small difference at installation of the unit or drain pipes. Intentional bending, expanding may cause the flexible hose broken and water leakage.

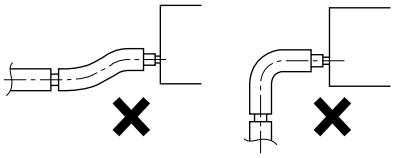

③ Make sure to make descending slope of greater than 1/100 and do not make up-down bend and/or trap in the midway.

a) Pay attention not to give stress on the pipe on the indoor unit side, and support and fix the pipe as close place to the unit as possible when connecting the drain pipe.

b) Do not set up air vent.

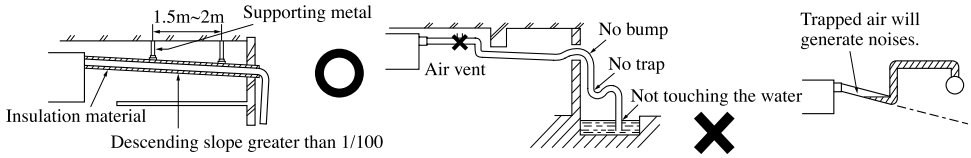

c) When sharing a drain pipe for more than one unit, lay the main pipe 100mm below the drain outlet of the unit. In addition, select VP-30 or bigger size for main drain pipe.

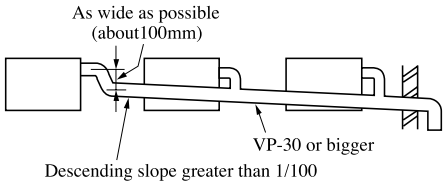

④ Insulate the drain pipe.

- Be sure to insulate the drain socket and rigid PVC pipe installed indoors otherwise it may cause dew condensation and water leakage.

* After drainage test implementation, cover the drain socket part with pipe cover (small size), then use the pipe cover (big size) to cover the pipe cover (small size), clamps and part of the drain hose, and fix and wrap it with tapes to wrap and make joint part gapless.

Drain up

- The position for drain pipe outlet can be raised up to 600mm above the ceiling. Use elbows for installation to avoid obstacles inside ceiling. If the horizontal drain pipe is too long before vertical pipe, the backflow of water will increase when the unit is stopped, and it may cause overflow of water from the drain pan on the indoor unit. In order to avoid overflow, keep the horizontal pipe length and offset of the pipe within the limit shown in the figure below.

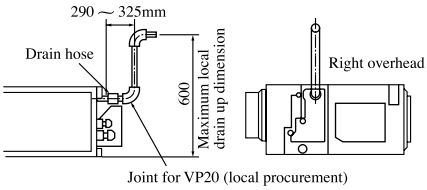

Otherwise, the construction point makes it same as drain pipe construction.

Drain test

① Conduct a drain test after completion of the electrical work.

② During the trail, make sure that drain flows properly through the piping and that no water leaks from connections.

③ In case of a new building, conduct the test before it is furnished with the ceiling.

④ Be sure to conduct this test even when the unit is installed in the heating season.

Procedures

① Supply about 1000 cc of water to the unit through the air outlet by using a feed water pump.

② Check the drain while cooling operation.

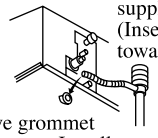

Insert water supply hose for 20mm ~ 30mm to supply water. (Insert hose facing toward bottom.)

Remove grommet Make sure to Install it back after test.

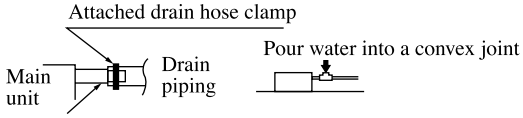

Drain situation can be checked with transparent socket.

(If the electrical work has not been completed, connect a convex joint in the drain pipe connection to provide a water inlet. Then, check if water leaks from the piping system and that drain flows through the drain pipe normally.)

Outline of bottom drain piping work

- If the bottom drain piping can be done with a descending gradient (1/50-1/100), it is possible to connect the pipes as shown in the drawing below.

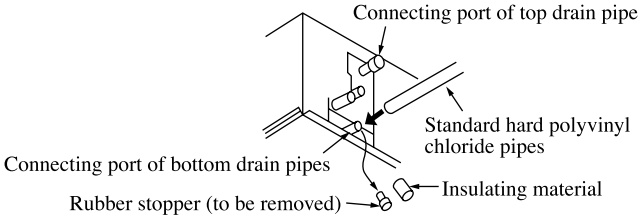

Uncoupling the drain motor connector

- Uncouple the connector CNR for the drain motor as illustrated in the drawing on the right.

(Note: If the unit is run with the connector coupled, drain water will be discharged from the upper drain pipe joint, causing a water leak.)

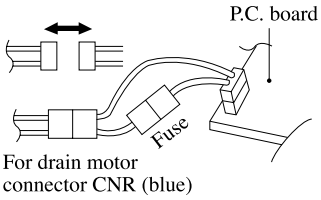

Drain pump operation

○ In case electrical wiring work finished

Drain pump can be operated by remote controller (wired).

For the operation method, refer to Operation for drain pump in the installation manual for wiring work.

○ In case electrical wiring work not finished

Drain pump will run continuously when the dip switch “W7-1” on the indoor unit PCB is turned ON, the Connector CNB is disconnected, and then the power supply (230VAC on the terminal block ① and ②) is turned ON.

Make sure to turn OFF “W7-1” and reconnect the Connector CNB after the test.

(vii) Wiring-out position and wiring connection

- Electrical installation work must be performed according to the installation manual by an electrical installation service provider qualified by a power provider of the country, and be executed according to the technical standards and other regulations applicable to electrical installation in the country.
  Be sure to use an exclusive circuit.
- Use specified cord, fasten the wiring to the terminal securely, and hold the cord securely in order not to apply unexpected stress on the terminal.
- Do not put both power source line and signal line on the same route. It may cause miscommunication and malfunction.
- Be sure to do D type earth work.
- For the details of electrical wiring work, see attached instruction manual for electrical wiring work.

① Remove a lid of the control box (2 screws).
② Hold each wiring inside the unit and fasten them to terminal block securely.
③ Fix the wiring with clamps.
④ Install the removed parts back to original place.

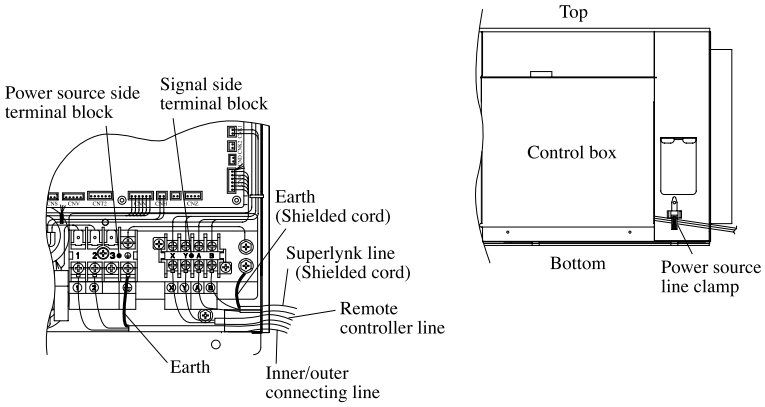

(viii) Tap selection on blower unit (when the high peformance filter is used)

The fan tapís factory setting is ìStandard.î If you want to change it to the high static-pressure setting, you can avail yourself of the following two methods. Use one of the two methods to set the fan tap.
Make sure to perform the functional setting with remote controller.
Select [Indoor function] in the functional setting mode, and change the function number [01] [High wall setting].
For operation method, refer to the user's manual of the remote controller.

Function number A	Functional content B	Setting content C	Default setting
01	High wall setting	Standard	○
		High wall 1	

UNIT: Pa

Static Pressure	Standard Tap	50
	High Tap	130

(g) Duct connected-Low/Middle static pressure type (FDUM)

(i) Selection of installation location

1) Avoid installation and use at those places listed below.

a) Places exposed to oil splashes or steam (e.g. kitchens and machine plants).
Installation and use at such places will incur deteriorations in the performance or corrosion with the heat exchanger or damage in molded synthetic resin parts.

b) Places where corrosive gas (such as sulfurous acid gas) or inflammable gas (thinner, gasoline, etc.) is gnerated or remains. Installation and use at such places will cause corrosion in the heat exchanger and damage in molded synthetic resin parts.

c) Places adjacent to equipment generating electromagnetic waves or high-frequency waves such as in hospitals. Generated noise may cause malfunctioning of the controller.

2) Select places for installation satisfying the following conditions and, at the same time, obtain the consent on the part of your client user,.

a) Places where chilled or heated air circulates freely. When the installation height exceeds 3m, warmed air stays close to the ceiling. In such cases, suggest your client users to install air circulators.

b) Places where perfect drainage can be prepared and sufficient drainage gradient is available.

c) Places free from air disturbances to the return air port and supply hole of the indoor unit, places where the fire alarm may not malfunction to short circuit.

d) Places with the environmental dew-point temperature is lower than 28˚C and the relative humidity is less than 80%.

(This unit is tested under ISO installation conditions to make sure that there are no defects. However, if it is operated under conditions of high humidity that exceed the conditions above, there is danger of condensate falling from the unit. If there is a possibility that the unit will be used under such conditions, dress 10~20 mm of insulation on the entire unit body, the piping and drain pipe.)

3) Check if the selected place for installation is rigid enough to stand the weight of thew unit.
Otherwise, apply reinforcement using boards and beams before starting the installation work.

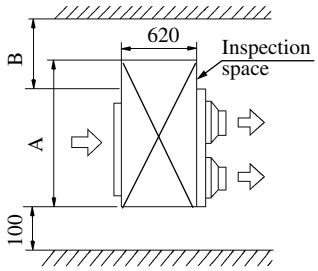

Unit : mm

Models \ Mark	A	B
FDUM22, 28, 36, 45, 56	1100	600
FDUM71, 90	1300	600
FDUM112, 140	1720	600

(ii) Suspension

Be sure to observe the finished length of the suspension bolts given below.

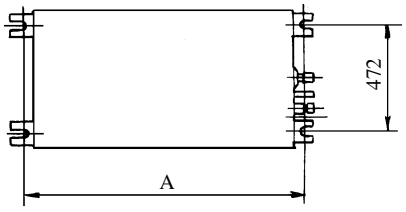

Unit : mm

Models \ Mark	A
FDUM22, 28, 36, 45, 56	786
FDUM71, 90	986
FDUM112, 140	1406

1) Fixing the suspension bolt (customer ordered parts M10)

Securely fix the suspension bolt as illustrated below or in another way.

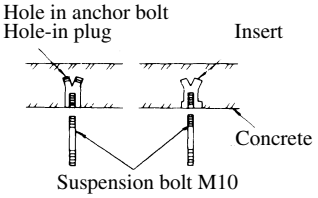

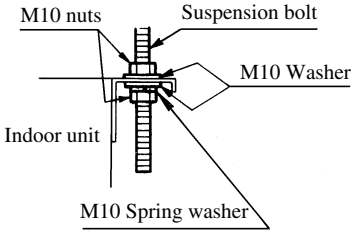

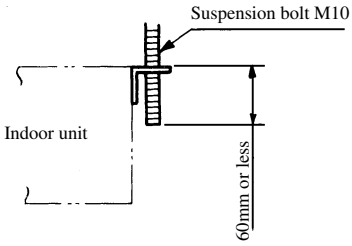

2) Adjusting the unit's levelness

a) Adjust the out-levelness using a level vial or by the following method.

- Make adjustment so that the relation between the lower surface of the indoor unit proper and water level in the hose becomes given below.

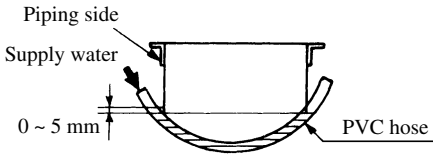

Bring the piping side slightly lower

b) Unless the levelness is adjusted properly, the malfunction of the float switch will occur.

3) Blower fan tap switch

① By means of function setting from the remote control unit, set the setting ⓒ of "I/U FUNCTION ▲" (indoor unit function) to "Hi CEILING 1" (high-speed tap) as shown right.

Function number Ⓐ	Function description Ⓑ	Setting Ⓒ
01	Hi CEILING SET	Hi CEILING 1

For the details of operating procedures, please refer to the installation manual of your remote control unit.

(iii) Duct work

① Supply air duct

- 1-spot, 2-spot, 3-spot and 4-spot with ∅200 type duct are the standard specifications. Determine the number of spots based on following table.

FDUM22	FDUM28, 36, 45, 56	FDUM71, 90	FDUM112, 140
1-spot	2-spot	2 ~ 3-spot (1)	3 ~ 4-spot (2)

Notes (1) Shield the central supply air port for 2-spot.
(2) Shield the supply air port around the center for 3-spot.

- Limit the difference in length between spots at less than 2:1.
- Reduce the length of duct as much as possible.
- Reduce the number of bends as much as possible. (Corner R should be as larger as possible.)

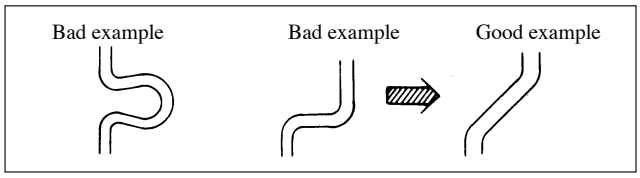

- Use a band, etc. to connect the indoor unit and the supply air duct flange.
- Conduct the duct installation work before finshing the ceiling.

② Access door

Access door must be provided without fail.

- **Dimensions of access door and service space**

  (See exterior dimensions in page 51 to 54.)

③ Return air port

- When shipped, the return air port lies on the back.
- When connecting the duct to the return air port, remove the air filte if it is fitted to return air port.
- When placing the return air port to carry out suction from the bottom side, use the following procedure to replace the return air duct joint and the bottom plate.

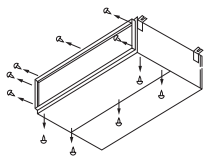

•□Remove the screws which fasten □ the bottom plate and the duct joint □ on the return air port of the unit.

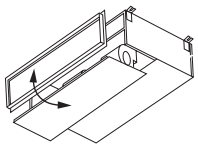

•□Replace the removed bottom plate □ and duct joint.

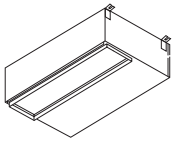

•□Fit the duct joint with a screw, I fit the bottom plate.

- Make sure to insulate the duct to prevent dewing on it.

④ Install the specitic supply air duct in a location where the air will circulate to the entire room.

- The duct connection is specific to the 200 circular duct.
- Conduct the installation of the specific supply air hole and the connection of the duct before attaching them to the ceiling.
- Insulate the area where the duct is secured by a band for dew condensation prevention.

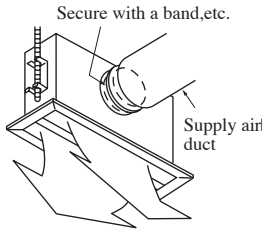

⑤ Make sure provide an inspection hole on the ceiling. It is indispensable to service electric equipment, motor, functional components and cleaning of heat exchanger.

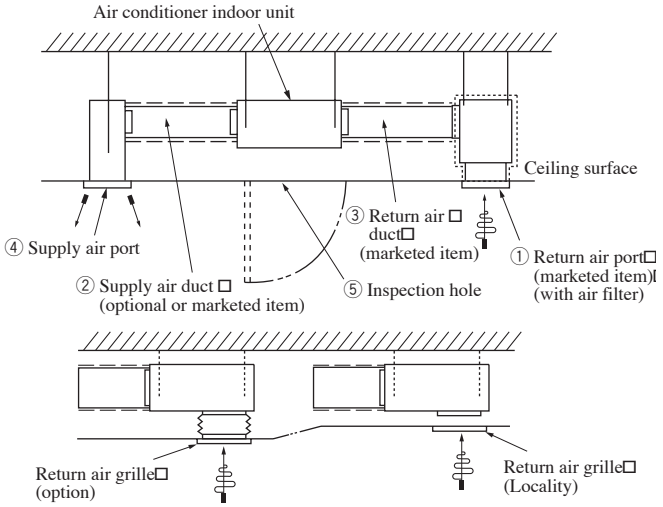

⑥ If a duct is not provided at the return air side but it is substituted with the space over the ceiling, humidity in the space will increase by the influence of capacity of ventilation fan, strength of wind blowing againat the outdoor air louver, weather (rainy day) and others.

- Moisture in air is likely to condense over the external plates of the unit and to drip on the ceiling. Unit should be operated under the conditions as listed in the above table and within the limitation of wind volume. When the building is a concrete strucially immediately after the construction, humidity tends to rise if the space over the ceiling is not substitued in place of a duct. In such occasion, it is necessary to insulate the entire unit with glass wool (25mm). (Use a wire net or equivalent to hold glass wool in place.)
- It may run out the allowable limit of unit operation (Example: When outdoor air temperature is 35ºCD.B, return air temperature is 27ºCW.B) and it could result in such troules as compressor overload, etc..
- There is a possibility that the supply air volume may exceed the allowable range of operation due to the capacity of ventilation fan or strength of wind blowing against external air louver so that drainage from be heat exchanger may fail to reach the drain pan leak outside (e.g. drip on to the ceiling) with consequential water leakage in the room.

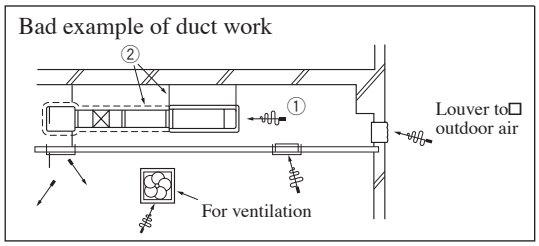

Notice: Aspecific cover plate is available when changing the 4 spot to the 3 spot, or when changing the 3 spot to the 2 spot.

Note (1) Do not change from 2 spot to 1 spot.

⑦ **Return air duct: Use square duct.**

⑧ **Return air port with canvas duct**

1) Connection of intake and exhaust ducts.

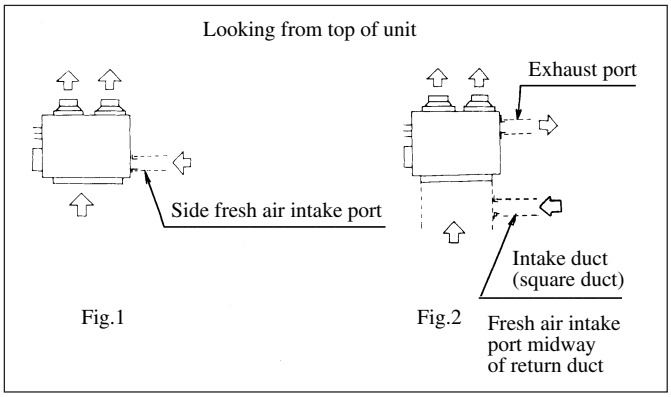

2) Duct connecting position.

< Fresh air intake >

a) Use side air intake port.

b) In case of simultaneous intake and exhaust, the side air intake port cannot be used, therefore, take air from the midway air intake port along the intake duct.

< Exhaust > Make sure to use suction as well.

c) Use a side exhaust port.

3) Duct connection

Use intake and exhaust duct flange of separately sold (for connection of ∅125mm round duct) to connect ∅125mm round duct. The duct clamped by bands must be thermally insulated to prevent dew condensation.

(iv) Drain piping

1) Drain piping should always be in a downhill grade (1/50-1/100) and avoid riding across an elevation or makeing traps.

● Good piping

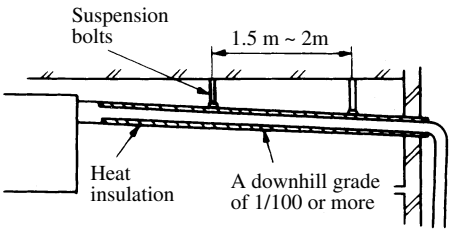

● Improper piping

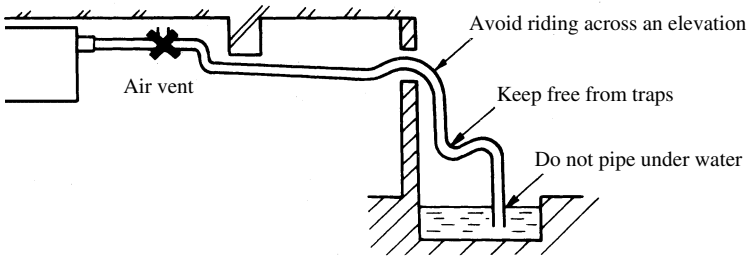

2) When connecting the drain pipe to the unit, pay suffcient attention not to apply excess force to the piping on the unit side. Also, fix the piping at a point as close as possible to the unit.

3) For drain pipe, use hard PVC general purpose pipe VP-20 which can be purchased locally. When connecting, insert a PVC pipe end securely into the drain socket before tightening securely using the attached drain hose and clamp. Adhesive must not be used connection of the drain socket and drain hose (accessory).

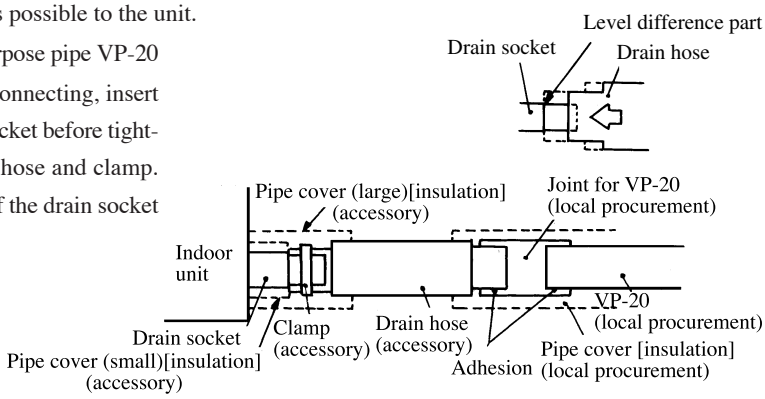

4) When constructing drain piping for several units, position the common pipe about 100 mm below the drain outlet of each unit as shown in the sketch below. Use VP-30 or thicher pipe for this purpose.

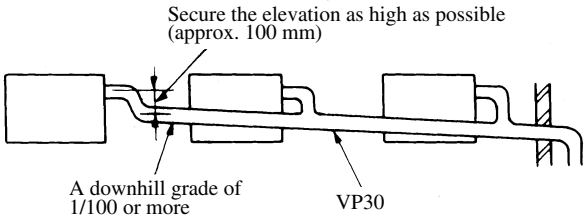

5) Be sure to provide heat insulation to hard PVC pipes of indoor placement.

6) Do not ever provide an air vent.

7) The height of the drain head may be elevated up to a point 600 mm from the bottom of unit and, when an obstacle exists in the ceiling space, elevate the piping to avoid the obstacle using an elbow or corresponding gadget. When doing this, if the stretch for the needed height is too high, the back-flow quantity of drain at the time of interruption of the operation gets too much and it may cause overflow at the drain pan. Therfore, make the height of the drain pipe withing the distance given in the drawing below.

Unit : mm

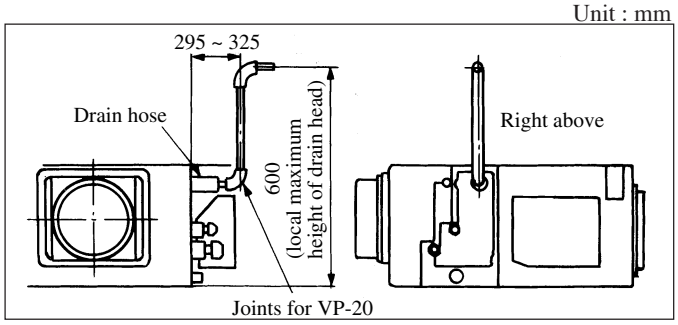

8) Avoid positioning the drain piping outlet at a place where generation of odor may stimulated. Do not lead the drain piping direct into a sewer from where sulfur gas may generate.

9) Drainage test

a) During trial operation, make sure that drainage is properly execued and check that leakage is not found at connections.

b) Be sure to carry out a drainage test when installing the system during a heating season.

c) When installing the system in a building under construction, carry out the drainage test before ceiling tiles are installed.

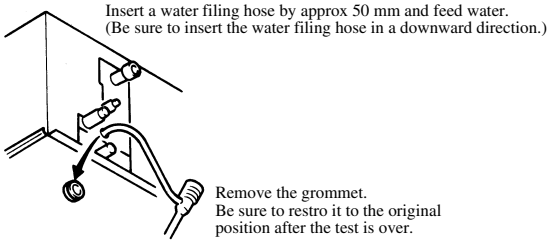

① Supply approx 1000cc of water through the outlet of the unit using a feed water pump.

② Make sure that drainage is proceeding properly at the see-through outlet of the unit.

* Also confirm the revolving sound of the condensate motor when checking the drainage.

③ Then remove the drain plug at lower section of the unit to drain water off. After making sure water is not left, restore the drain plug to the original position.

Forced drain pump operation

♦ Setup from a unit side.

① In case electrical wiring work finished
Drain pump can be operated by remote controller (wired).
For the operation method, refer to Operation for drain pump in the installation manual for wiring work.

② In case electrical wiring work not finished
Drain pump will run continuously when the dip switch "W7-1" on the indoor unit PCB is turned ON, the Connector CNB is disconnected, and then the power supply (230VAC on the terminal block ① and ②) is turned ON.
Make sure to turn OFF "W7-1" and reconnect the Connector CNB after the test.

♦ Setup from a remote controller side.

Drain pump operation from a remote controller unit is possible. Operate a remote controller unit by following the steps described below.

1. To start a forced drain pump operation
   ① Press the TEST button for three seconds or longer.
   The display will change from "AIR CON No SELECT ITEM"→ " ○ SET"→ "TEST RUN ▼"
   ② Press the ▼ button once while " TEST RUN ▼" is displayed, and cause "DRAIN PUMP ⬍" to be displayed.
   ③ When the SET button is pressed, a drain pump operation will start.
   Display: "DRAIN PUMP RUN"→ " ○ → STOP"
2. To cancel a drain pump operation.
   ① If either SET or ON/OFF button is pressed, a forced drain pump operation will stop.
   The air conditioning system will become OFF.

10)Drainage from the lower drain socket

Only if the drain pipe can be installed in a downhill grade (1/50-1/100), the lower drain socket can be used for connecting to the drain pipe as illustrated.
(Disconnect the connector for the drain motor)
As shown in the sketch to the right, disconnect the drain motor connector CnR (blue color coding).
If the system is started with this connector connected as is, drain water is discharged out of the upper drain socket causing a heavy water lekage.

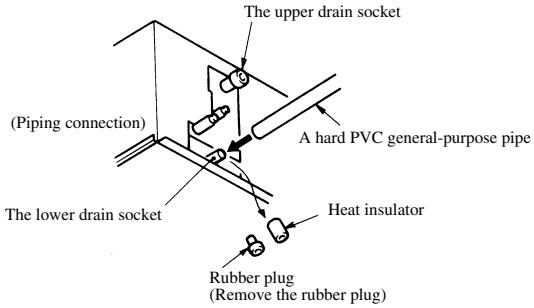

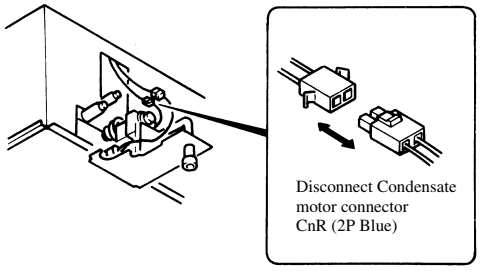

(h) Duct connected (Ultra thin)-Low static pressure type (FDQS)

(i) Selection of installation location

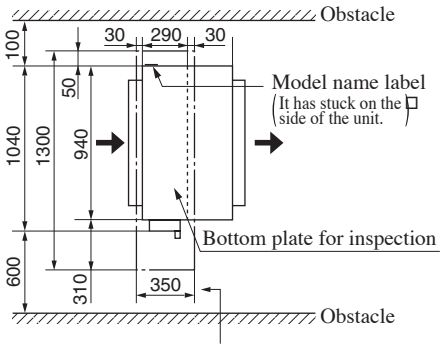

An access measuring 350mm × 1300mm is required for servicing, so please provide a 350mm × 1300mm inspection opening right beneath it.
(For servicing the control, fan, fan motor and drain pump)

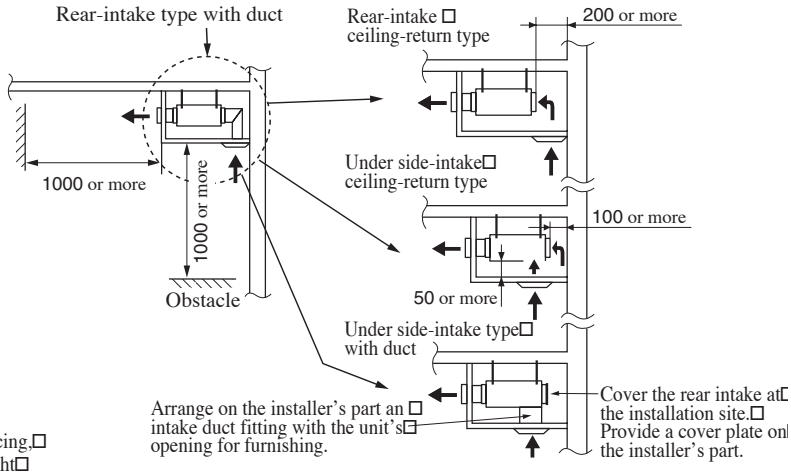

Notice Underside-intake type installation is not recommended for hotel and residential installations due to a high noise level.

1) With the customer's consent, select a location with the following suitable conditions:
   ① Where cool air or hot air can easily pass through. If the height of the location exceeds 3 meters, hot air will gather around the ceiling. In such case, suggest to the customer to also install a circulator.
   ② Where wiring and piping to outdoor areas may easily be conducted.
   ③ Where water can be completely drained.
   ④ Where the ceiling for the installation section is firm.
   ⑤ Where there are no wind disturbances to the suction inlet and blowing outlet, where the fire alarm will not be set off erroneously, and where no short circuits occur.
   ⑥ When installing in locations of high humidity, consider measures against condensation, such as insulation materials.
   ⑦ Avoid location where there are abundant oil splashes and moisture (i.e., kitchens, mechanical workshops). These locations may cause poor performance of the heat exchanger, corrosion, and damage to the plastic parts.
   ⑧ Where there is no direct sunlight.
   ⑨ Avoid locations close to devices emitting high frequencies. Electromagnetic noises may cause malfunction of the control.
   ⑩ Avoid locations with corrosive gases (such as sulfuric acid gas), inflammable gases (such as thinner, gasoline) and where gases may accumulate. These locations may cause corrosion to the heat exchanger and damage to the plastic parts.
   ⑪ There is a possibility of surrounding atmosphere to exceed the threshold concentration of refrigerant gas when the refrigerant gas leaks. Therefore, to prevent suffocation it is necessary to havea ventilation hole to another room or to install a ventilator for the unit which is linked with a gas detector.
   ⑫ The air conditioner and the remote control should be placed at least 1 meter away from the televistion and the radio.
   ⑬ **The unit has been tested in accordance with JIS dew point conditions to ensure trouble free operations. However, if the unit operates at a high temperature (above the dew point temperature of 23 °C), water droplets may fall. In this case, cover the pipes and the drain pipes further with insulating materials of 10-20 mm thickness. Also add insulating materials of 10-20 mm thickness onto the unit exterior panels.**

2) Consider the supporting strength of the location. If the strength is not sufficient to sustain the unit weight, use reinforcing materials such as boards or crossbeams before installation.

(ii) Preparations for hanging in the attic

Hanging Bolt Location

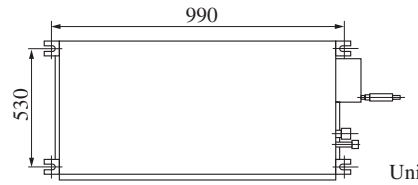

Unit : mm

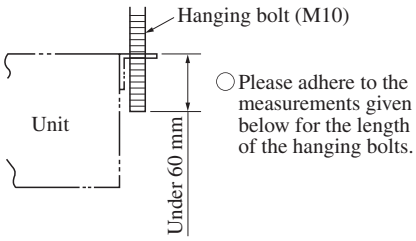

(iii) Moving and installing the unit

Moving

○ Move the packed box as close to the installation area as possible.□
○ If it must be unpacked, wrap the unit with a nylon sling or apply a support panel and lift it with a rope to avoid damage to the unit.

Installation

[Hanging]

Hang the unit up.

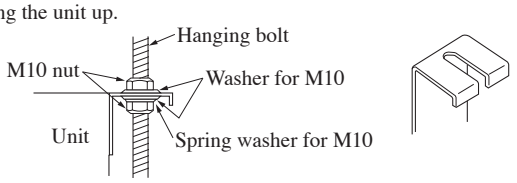

If the measurements between the unit and the ceiling holedo not match upon installation, it may be adjusted with the long holed installation tool.

Adjustment for horizontality

○ Either use a level vial, or adjust the level according to the l method below.

● Adjust so the bottom side of the unit will be leveled with the water surface as illustrated below.

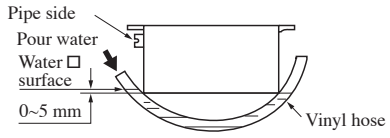

Let the pipe side be slightly sloped.

○ If the unit is not leveled, it may cause malfunctions or inoperation of the float switch

(iv) Duct work

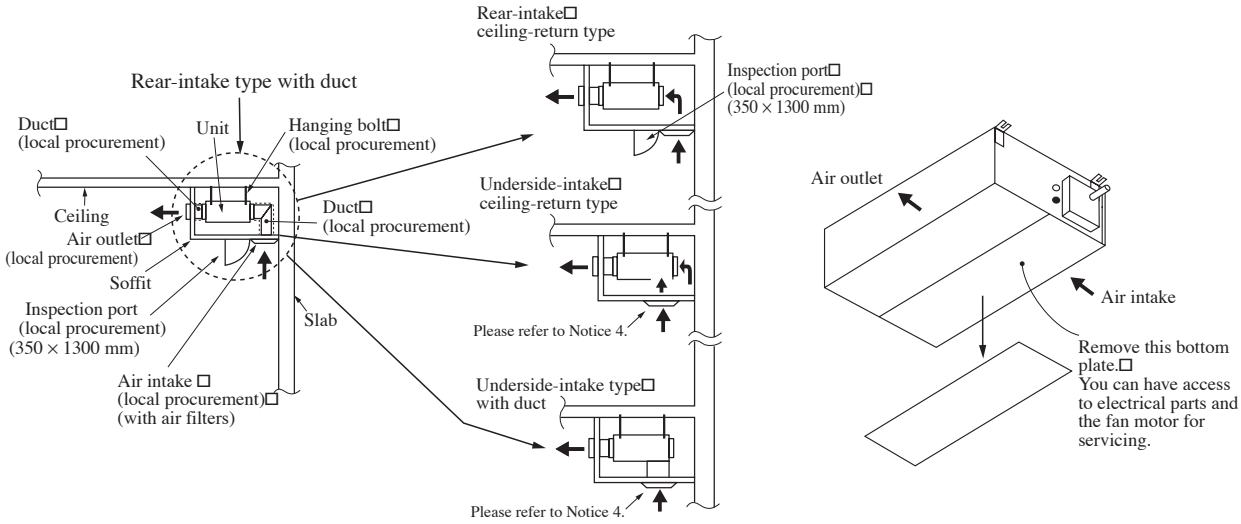

1) This unit is designed for installation in a soffit. It is not designed to inhale fresh air directly.
2) In the case of an underside-intake ceiling-return type installation, remove the bottom plate of the unit on the fan side to make it an underside intake type.
   The rear intake should be used together.
3) The air conditioning unit main body is not equipped with air filters. Incorporate air filters in an air intake grille, which will facilitate the cleaning of air filters.
4) In the case of a rear-intake type with duct and a rear-intake ceiling-return type installation, be sure to provide a 350 mm × 1300 mm inspection opening right beneath the unit's fan side bottom plate to permit servicing of the unit as illustrated in installation geometries.
   In the case of an underside-intake type with duct and underside-intake ceiling-return thpe, provide an intake opening right beneath the unit's fan side bottom plate so that it will serve as an inspection opening as well.
   Please also see to its dimensions so that the intake opening will be made to 350 mm × 1300 mm.
5) Take care to install a duct horizontally in connecting the unit with a diffuser.
6) When a canvas duct is used for either intake or outlet duct, install it with care so that it may not get flattened.
7) Select a desirable diffuser position and diffuser form to ensure the distribution of winds throughout the room and use a diffuser employing a strusture that provides the capability to regulate winds.
8) Install the air conditioning unit main body via vibration-isolating rubbers to prevent vibrations from propagating directly from the air conditloning unit main body to the ceiling and slab.
9) Secure at least 0.15m^2 for the opening of an air intake.
10) Never fail to heat-insulate the ducts to prevent condensation on their surfaces.

(v) Refrigerant pipng

① Use the pipes of the following material: seamless phosphorous deoxidized copper Type 1 (C1220T, JISH3300).

② Thoroughly insulate the pipes on the gas and liquid sides.

- On the gas side, the maximum temperature may reach 120 °C, so use insulating materials which can withstand this temperature.

③ The refrigerant is filled in the outdoor unit. Only fill the necessary on-site pipes with the refrigerant.

④ The pipes should be bent into a curve with a radius as large as possible. It is not to be bent repeatedly.

⑤ Use two spanners to remove the flare nuts at the end of the pipe. A fter connecting the pipe, use two spanners to tighten it.

⑥ When attaching the flare nuts, apply freezing machine oil over the flare screw area and screw them manually for 3 to 4 turns.

⑧ After checking for any gas leaks, cover the pipe joints with the joint insulating material provided as an accessory, and secure the two ends with clamps.

⑨ The unit has been tested in accordance with JIS dew point conditions to ensure trouble free operations. However, if the unit operates at a high temperature (above the dew point temperature of 23 °C), water droplets may fall. In this case, cover the pipes and the drain pipes further with insulating materials of 10-20 mm thickness.

⑩ Do not bend or squash the pipes.

⑪ Do not allow rubbish, swarf or moisture to enter the pipes when conducting plumbing work.

Pipe locations Unit : mm

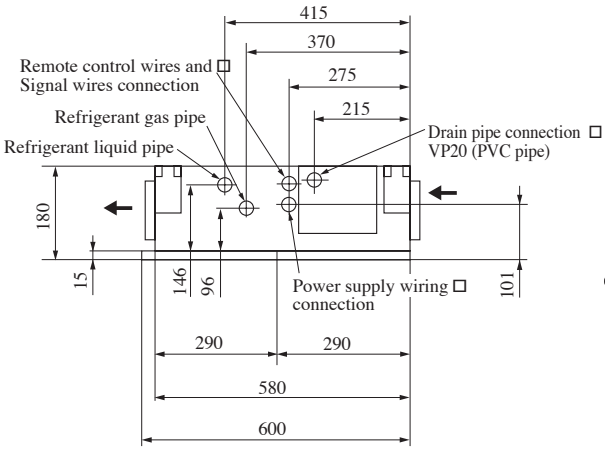

Piping Connect the refrigerant pipes as in the illustration below.

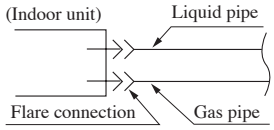

Insulating the pipe

See the Instructions attached to the outdoor unit for refrigerant piping.

Completely insulate both the gas pipe side and the liquid pipe side

- After checking gas leaks, cover the flared joints of the indoor unit with the provided insulator and firmly secure both ends with the provided bands.

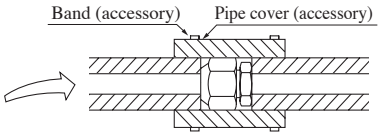

(vi) Drain piping

Operation instructions

(a) Drain piping should always be in a downhill grade (1/50~1/100) and avoid riding across and elevation or making traps.

● Improper piping

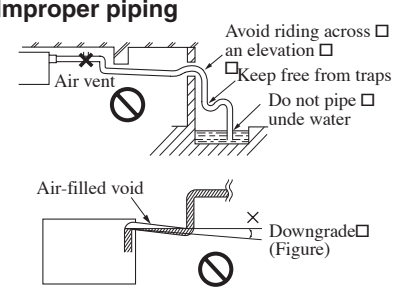

● Good piping

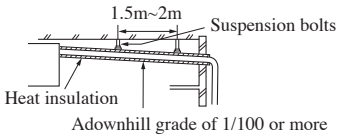

・Please do not give a downgrade to the drainpipe as illustrated in the drawing on the left. This will create an air-filled void and cause noise generation upon stopping.

(b) When connecting the drain pipe to unit, pay sufficient attention not to apply excess force to the piping on the unit side. Also, fix the piping at a point as close as possible to the unit.

(c) For drain pipe, use hard PVC general purpose pipe VP-20. which can be purchased locally. When connecting, insert a PVC pipe end securely into the drain socket before tightening securely using the attached drain hose and clamp. Adhesive must not be usedconnection of the drain socket and drain hose (accessory).

● **Do not use acetone-based adhesives to connect to the drain socket.**

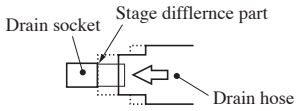

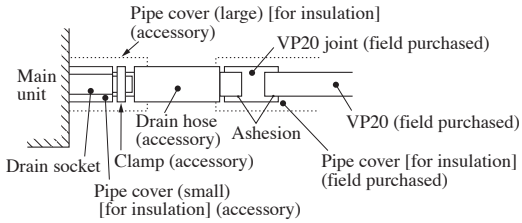

(d) When constructing drain piping for several units, position the common pope about 100mm below the drain outlet of each unit as shown in the sketch. Use VP-30 (11/4") or thicker pipe for this purpose.

(e) Be sure to provide heat insulation to hard PVC pipes of indoor placement.

(f) Do not ever provide an air vent.

(g) You can elevate the drain outlet up to 600mm from the indoor unit's lower face. When an obstacle exists in the ceiling space, elevate the piping to avoid the obstacle using an elbow or corresponding gadget. When doing this, if the stretch for the needed height is higher than 600mm, the back-flow quantity of drain at the event of interruption of the operation gets too much and it may cause overflow at the drain pan. Therefore, make the height of the drain pipe within the distance given in the sketch below.

(h) Avoid positioning the drain piping outlet at a place where generation of odor may be stimulated. Do not lead the drain piping direct into a sewer from where sulfur gas may generate.

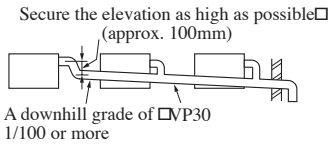

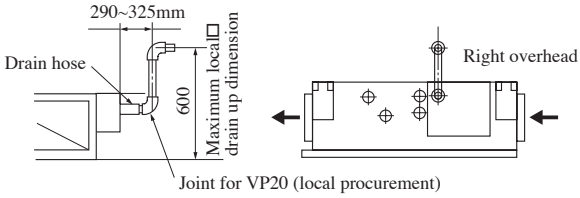

Drainage test

① Conduct a drainage test after completion of the electrical work.

② During the trial, make sure that drain flows properly through the piping and that no water leaks from connections.

③ In case of a new building, conduct the test before it is furnished with the ceiling.

④ Be sure to conduct this test even when the unit is installed in the heating season.

Procedures

① Supply about 1000 cc of water to the unit through the air outlet by using a feed water pump.

② Check the drain while cooling operation.

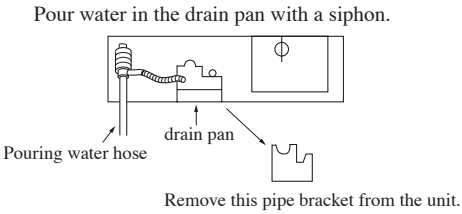

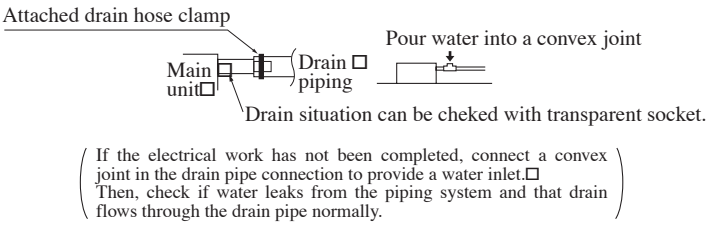

(i) Ceiling suspended type (FDE)

(i) Selection of installation location

1) A place where good air circulation and delivery can be obtained.

Cold air throw

Unit : m

Models	FDE36, 45	FDE56, 71	FDE112, 140
Air throw	7.5	8	9

Conditions

(1) Installation height: 2.4 ~ 3.0 m above the floor

(2) Fan speed: Hi

(3) Location: Free space without obstacles

(4) Distance of reach indicates the horizontal distance after the wind touched down on the floor.

(5) Air velocity at the throw: 0.5 (m/sec.)

2) A place where ceiling has enough strength to support the unit.

3) A place where there is no obstruction to the return air inlet and supply air outlet ports.

4) Places exposed to oil splashes or steam (e.g. kitchens and machine plants).
Installation and use at such places will incur deteriorations in the performance or corrosion with the heat exchanger or damage in molded synthetic resin parts.

5) A place where the space shown below may be secured.

Ceiling mouting installation

Unit : mm

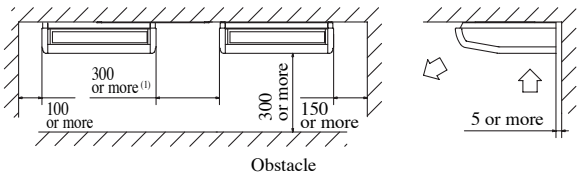

Note (1) This shows the installation interval dimensions between units.

6) This unit uses a microcomputer as a control device. Therefore avoid installing the unit near the equipment that generates strong electromagnetic waves and noise.

(ii) Installation preparation

1) Remove the air return grille.

Slide the stoppers (4 places).

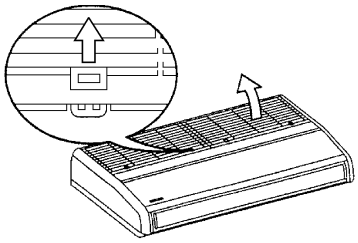

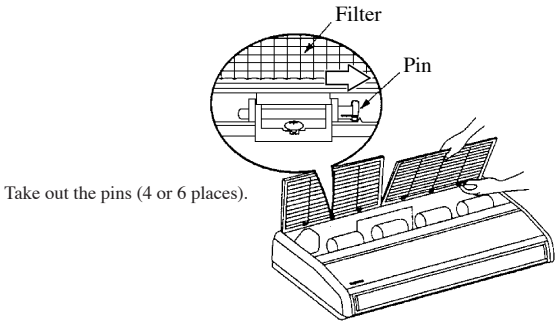

2) Remove the side panels.

Take out the screws, then slide the side panels in the arrow direction to remove them.

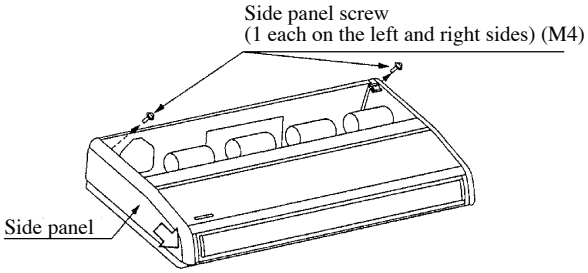

3) Remove the suspension lug.

Take out the screws, then loosen the installation bolt.

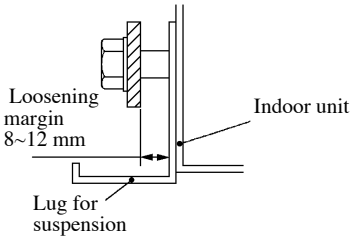

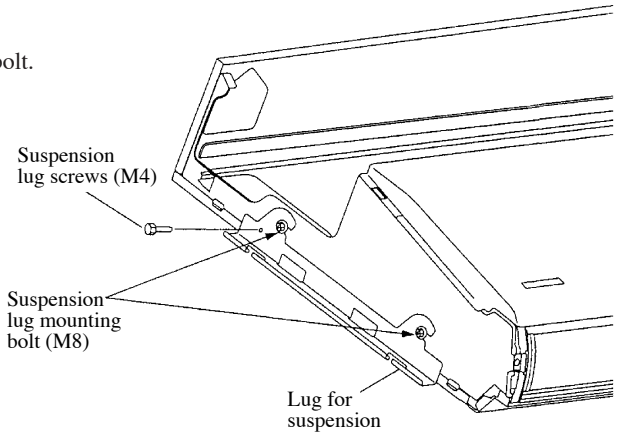

4) Suspension Bolt Position

a) Using the paper pattern supplied as an accessory as a criterion, select suspension bolt positions and piping hole positions, then install the suspension bolts and make holes for piping. After positioning, remove the paper pattern.

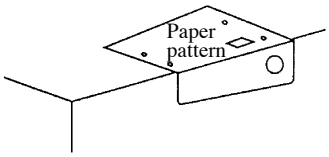

b) Keep strictly to the suspension bolt lengths specified below.

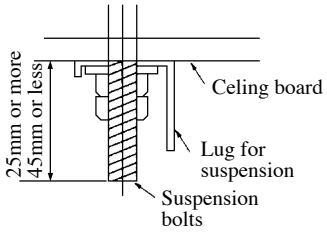

Unit : mm

Model	A	B
FDE 36, 45	1070	1022
FDE 56, 71	1320	1272
FDE 112,140	1620	1572

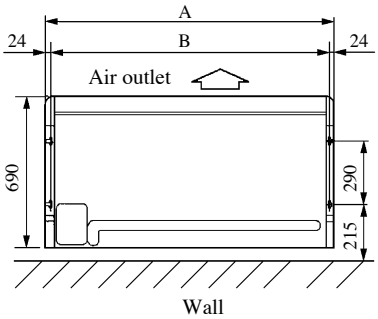

(iii) Installation

1) Fasten the suspension lugs to the suspension bolts.

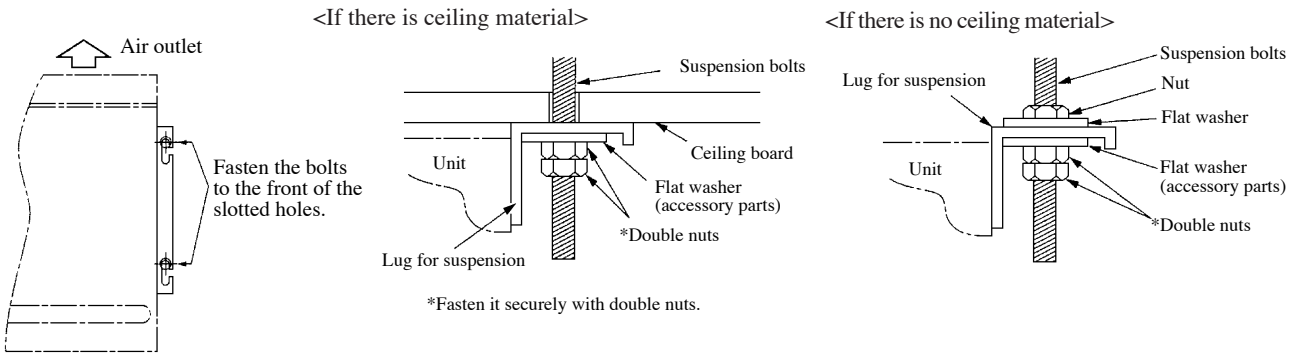

2) Attach the unit to the suspension lugs.

① Slide the unit onto the suspension lugs from the front, hanging it on the bolts.

② Fasten the unit securely on the left and right sides with 4 suspension bolts (M8).

③ Tighten the 2 screws (M4) on the left and right sides.

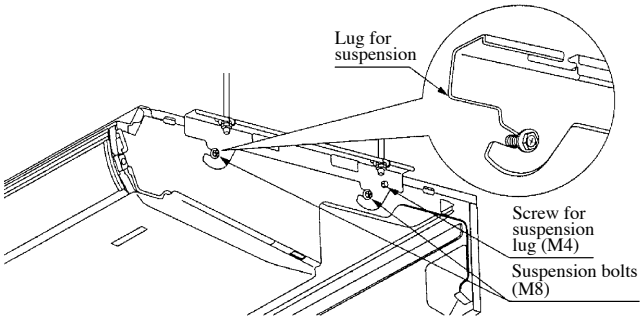

⚠ After sliding the side panels on from the front to rear, fasten them securely with the screws.

3) IN order to make it easier for water to drain out. install the unit so that the water drain side slopes downward.

● **Left-right direction**

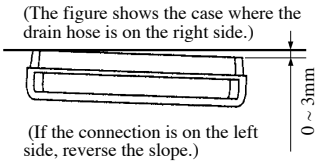

● **Front-rear direction**

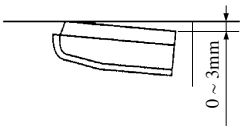

⚠ If the slope is reversed, there is danger of water leaking out.

(iv) Refrigerant Piping

1) Piping Position

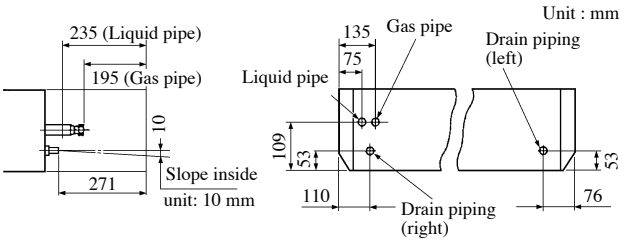

2) Piping Connection Position

Piping can be connection from 3 different directions. Remove the cutout from hole where the piping will be connected using side cutters or similar tool. Cut a hole for the piping connection in the back cover according to the cutting margin shown. Cut a hole in the ceiling side in accordance with the position of the piping. Also, after the piping is installed, seal the space around the piping with putty, etc. to keep dust from getting inside the unit.

(In order to prevent damage to wires from the edges, be sure to use the back and top covers.)

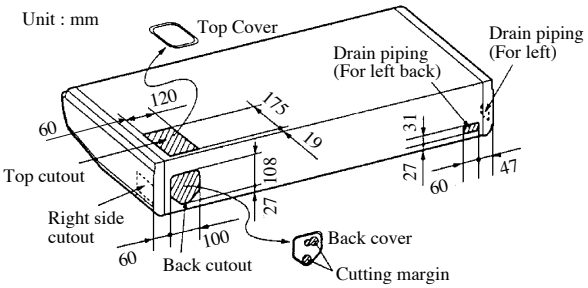

(v) Drain Piping

1) Drain piping can be connected from the back, right and left sides.

2) When installing drain piping, be sure to use the insulating material supplied for the drain hose and drain hose clamp.

a) Connect the drain hose fully all the way to the base of the fitting.

b) Fasten the hose securely with the drain hose clamp.

c) Keep strictly within the lengths specified below for the suspension bolts.

3) If drain piping is installed on the left side, change the rubber plug and insulating material (tubular) from the left side piping connection port to the right side.

⚠ Be careful that water doesn't pour out when the drain plug is removed.

⚠WARNING

Use the fitting supplied with the unit to connect the drain hose, fastening it at the lowest point so that there is no slack, and establishing a 10 mm drain slope.

* Keep electrical wiring from running beneath the drain hose.

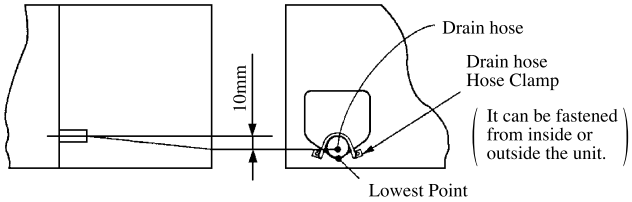

⚠ Be sure to fasten the drain hose down with a clamp.
There is danger of water overflowing the drain hose.

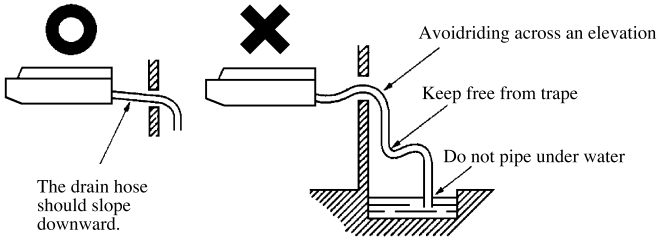

After piping has been installed, check to make sure water drains well and that there is no overflow.

(j) Wall mounted type (FDK)

Models FDK22~56KXE6

(i) Selection of installation location

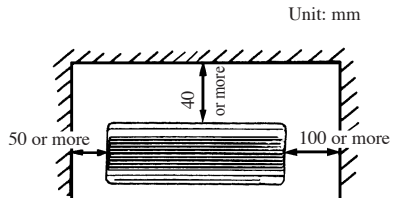

1) Select the installation location that meets the following conditions and obtain the customer's consent.
   a) Location where cold and warm air spread all over the room
   b) Location where piping and wiring to the outdoors can easily be laid down.
   c) Location where the drain can be discharged completely.
   d) Location where the wall to mount the unit is rigid.
   e) Location where there is no wind obstruction to the return air and supply air grills.
   f) Location not exposed to direct sunshine.
   g) Avoid the location exposed to oil splash or vapor.
   h) Avoid the location near to the machine emitting high-frequency radio wave.
   i) Avoid the location where the receiver of remote control is subject to strong illumination.
   j) Select the location where the unit can securely be operated by the wireless remote controller referring to the Article “Effective distance of wireless remote controller” indicated at the backside.
   k) Secure the space for inspection and maintenance work.

(ii) Attaching of mounting plate

1) The indoor unit weighs approx, FDK22~56 model : 12kg. Therefore, check whether the portion to install the unit can bear the weight of unit. If it seems to be danger, reinforce the portion by a plate or a beam before installing the unit. It is not allowed to install the unit directly on the wall. Whenever you install the unit, use the attached mounting plate.
2) Find structural members (Intermediate pillar, etc.) suitable for mounting the unit, then install the unit firmly while checking levelness.

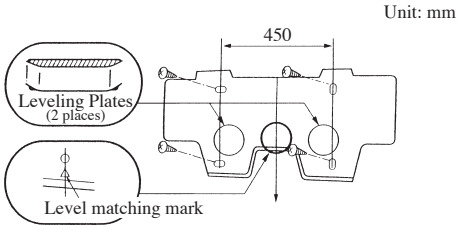

3) Adjust the level of mounting plate under the condition that four screws are tightened temporarily.

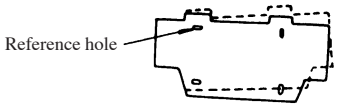

4) Turn the mounting plate around the reference hole to adjust the levelness.

⚠WARNING

Install the unit where it can bear the weight with sufficient strength margin. In the case of insufficient strength or insufficient installation work, the unit may fall and cause injury.

(iii) Procedure for making hole on the wall

- Make a downgrade (5°) from the indoors toward the outdoors.

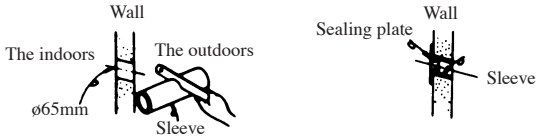

(iv) Forming of piping and drain hose

1) Rear take out case

a) Forming of piping

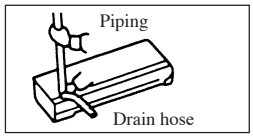

- Hold the root portion of piping, change the direction then expand and make forming.

b) Tape winding

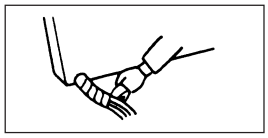

- Wind the tape on the portion which passes through the hole on the wall.
- Always make taping on the wiring which crosses with the piping, if any.

Note(1) After forming of piping and before tape winding, confirm that the connecting wire is securely fixed to the terminal block.

2) Cautions for left take-out and rear take-out case

a) Looking down

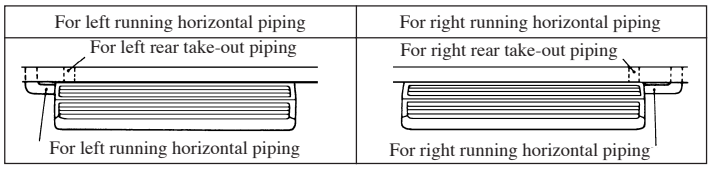

b) The piping can be taken out from the rear, left, left rear, right and down.

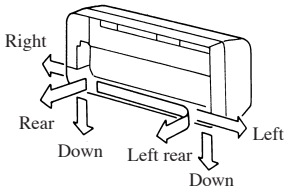

b) Procedure for changing drain hose

1. Remove the drain hose.	2. Remove the drain cap.	3. Insert the drain cap.	4. Connect the drain hose.
• Pull the drain hose off while turning the end around.	• Remove by hand or pliers.	• Insert the drain cap which was removed in procedure 2 securely using a hexagonal wrench, etc. Note(1) When it is not inserted securely, water leakage may occur.	• Push the end of the drain hose onto the fitting while turning it around. Note(1) When it is not inserted securely, water leakage may occur.

(v) Installation of unit

- To remove the unit from the mounting plate, remove the right and left lids then remove the claw at the lower portion of base.

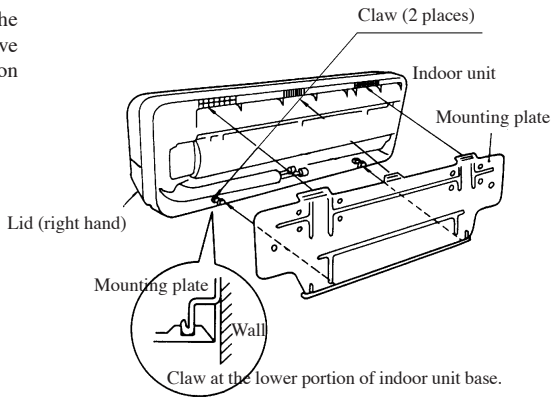

Installation work procedure

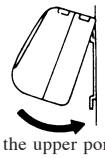

(1) Hang the upper portion of indoor unit on the mounting plate.

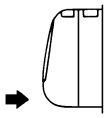

(2) The indoor unit can be fixed with one action by pushing its lower portion slightly.

(vi) Drain piping

1) Lay the drain piping with downgrade to facilitate flow of drain,and do not make a trap or chevron-shaped bend. (The drain piping can be taken out from the unit to the left, right, rear and down direction.)
2) Wrap the thermal insulator on the hard vinyl chloride pipe (VP-16) laid in the room.
3) Run the drain piping in a place where there is no fear of abnormal odors being generated at the end of the drain hose.
4) Do not run the drain piping directly into a sewer where sulfur-based poisonous or flammable gases are generated. There is danger of poisonous or flammable gases penetrating into the building through the drain piping.
5) Pour water into the drain pan below the heat exchanger to check that water is drained outdoors.

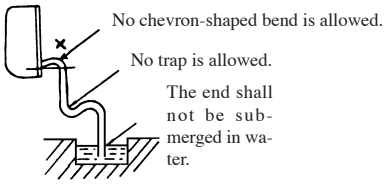

Illustration showing the end of drain hose

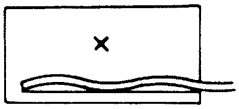

Model FDK71KXE6

(i) Selection of installation location

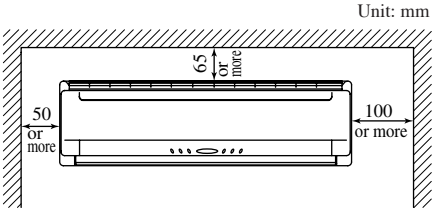

1) Select the installation location that meets the following conditions and obtain the customer's consent.
   a) Location where cold and warm air spread all over the room
   b) Location where piping and wiring to the outdoors can easily be laid down.
   c) Location where the drain can be discharged completely.
   d) Location where the wall to mount the unit is rigid.
   e) Location where there is no wind obstruction to the return air and supply air grills.
   f) Location not exposed to direct sunshine.
   g) Avoid the location exposed to oil splash or vapor.
   h) Avoid the location near to the machine emitting high-frequency radio wave.
   i) Avoid the location where the receiver of remote control is subject to strong illumination.
   j) Select the location where the unit can securely be operated by the wireless remote controller referring to the Article “Effective distance of wireless remote controller” indicated at the backside.
   k) Secure the space for inspection and maintenance work.

(ii) Attaching of mounting plate

1) The indoor unit weighs approx, FDK71 model : 18kg. Therefore, check whether the portion to install the unit can bear the weight of unit. If it seems to be dangerous, reinforce the portion by a plate or a beam before installing the unit. It is not allowed to install the unit directly on the wall. Whenever you install the unit, use the attached mounting plate.
2) Find structural members (Intermediate pillar, etc.) suitable for mounting the unit, then install the unit firmly while checking levelness.

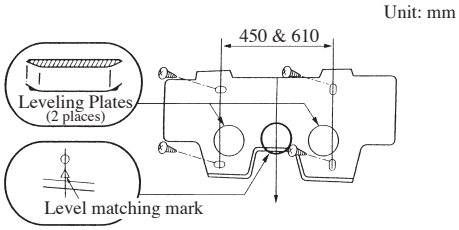

3) Adjust the level of mounting plate under the condition that four screws are tightened temporarily.

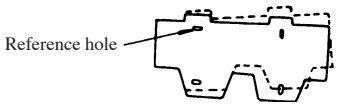

4) Turn the mounting plate around the reference hole to adjust the levelness.

⚠WARNING

Install the unit where it can bear the weight with sufficient strength margin. In the case of insufficient strength or insufficient installation work, the unit may fall and cause injury.

(iii) Procedure for making hole on the wall

- Make a downgrade (5°) from the indoors toward the outdoors.

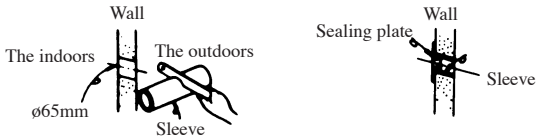

(iv) Forming of piping and drain hose

1) Rear take out case

a) Forming of piping

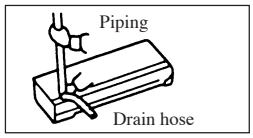

- Hold the root portion of piping, change the direction then expand and make forming.

b) Tape winding

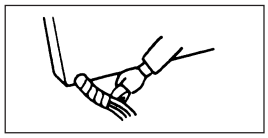

- Wind the tape on the portion which passes through the hole on the wall.
- Always make taping on the wiring which crosses with the piping, if any.

Note (1) After forming of piping and before tape winding, confirm that the connecting wire is securely fixed to the terminal block.

2) Cautions for left take-out and rear take-out case

a) Looking down

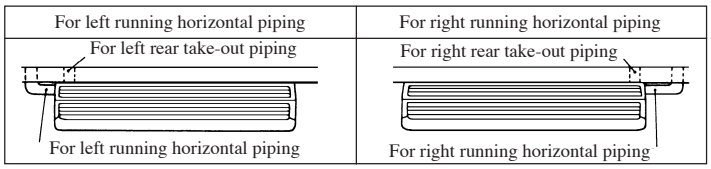

b) The piping can be taken out from the rear, left, left rear, right and down.

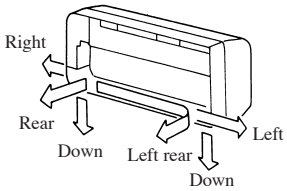

c) Procedure for changing drain hose

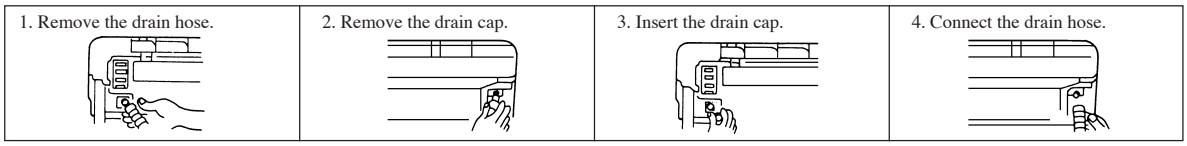

- Pull the drain hose off while turning the end around.
- Remove by hand or pliers.
- Insert the drain cap which was removed in procedure 2 securely using a hexagonal wrench, etc.

  Note (1) When it is not inserted securely, water leakage may occur.
- Push the end of the drain hose onto the fitting while turning it around.

  Note (1) When it is not inserted securely, water leakage may occur.

d) This air conditioner is designed to collect dew formed on itsback in the drain pan for discharging, so please do not lay power cables, etc. in any part above the gutter.

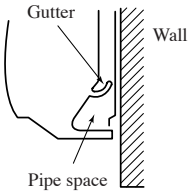

(v) Installation of unit

- To remove the unit from the mounting plate, remove the right and left lids then remove the claw at the lower portion of base.

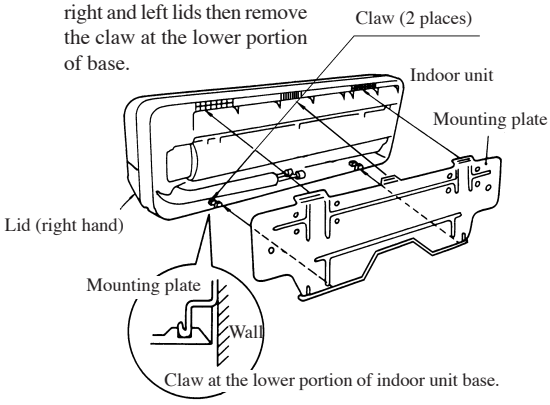

Installation work procedure

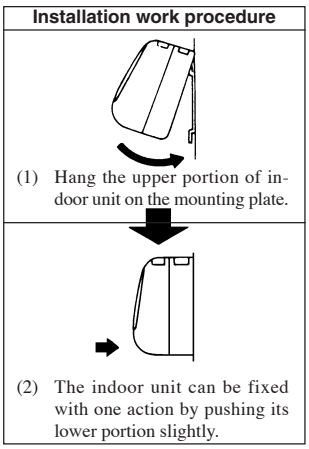

(1) Hang the upper portion of indoor unit on the mounting plate.

(2) The indoor unit can be fixed with one action by pushing its lower portion slightly.

(vi) Drain piping

1) Lay the drain piping with downgrade to facilitate flow of drain,and do not make a trap or chevron-shaped bend. (The drain piping can be taken out from the unit to the left, right, rear and down direction.)
2) Wrap the thermal insulator on the hard vinyl chloride pipe (VP-16) laid in the room.
3) Run the drain piping in a place where there is no fear of abnormal odors being generated at the end of the drain hose.
4) Do not run the drain piping directly into a sewer where sulfur-based poisonous or flammable gases are generated. There is danger of poisonous or flammable gases penetrating into the building through the drain piping.
5) Pour water into the drain pan below the heat exchanger to check that water is drained outdoors.

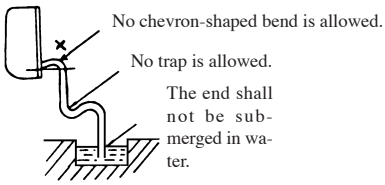

Illustration showing the end of drain hose

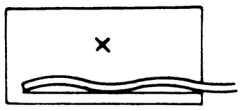

(k) Floor standing (with casing) type (FDFL)

Model: All models

(i) Selection of installation location

1) A place where good air circulation and delivery can be obtained.

● Cold air throw

Unit : m

Models	All models
Air throw	**4**

[Conditions]

(1) Fan speed: Hi

(2) Location: Free space without obstacles

(3) Distance of reach indicates the horizontal distance after the wind touched down the floor.

(4) Air velocity at the throw: 0.5 (m/sec.)

2) Where there is no obstacle around the Air inlet port or Air outlet port.

3) Where a sufficient space can be reserved for the service of air filter and the attachment/removal of panels.

4) Places exposed to oil splashes or steam (e.g. kitchens and machine plants).
Installation and use at such places will incur deteriorations in the performance or corrosion with the heat exchanger or damage in molded synthetic resin parts.

5) Where pipes and wires can be arranged conveniently.

6) On the solid floor

7) Where the unit is not exposed directly to sun light.

8) Places where corrosive gas (such as sulfurous acid gas) or inflammable gas (thinner, gasoline, etc.) is generated or remains.
Installation and use at such place will cause corrosion in the heat exchanger and damage in molded synthtic resin parts.

9) Where a complete draining can be assured.

10) Where a sufficient space can be reserved for service.

Floor standing installation

• Floor fixation

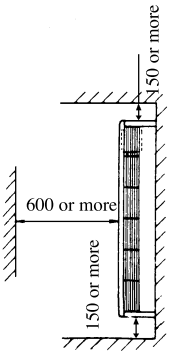

• Wall fixation

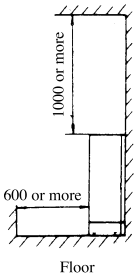

Unit : mm

(ii) Bolt positions

1) Bolt positions for metal settings used for floor fixation.

• Metal fitting used for floor fixation (accessories).

Unit : mm

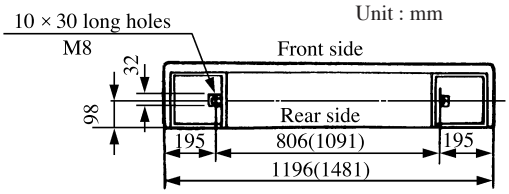

View from the floor

2) Bolt positions for wall fixation

Unit : mm

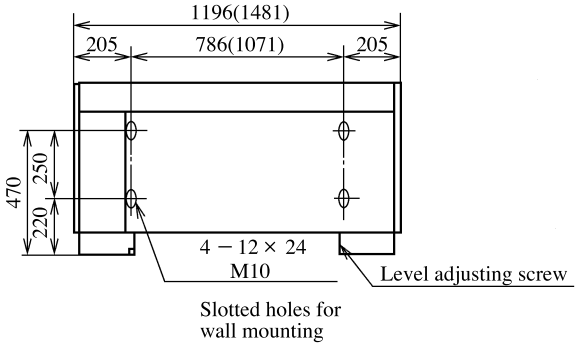

Note (1) Value in ( ) indicates 71 type.

(iii) Installation of unit

1) Floor standing installation

a) Position of mounting bracket fixing bolts Drill holes by referring to figures below.

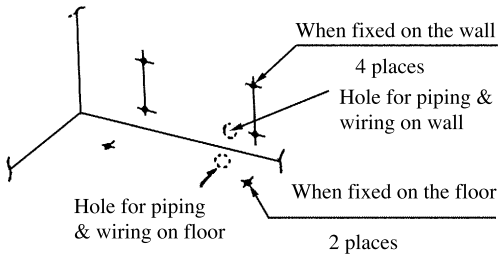

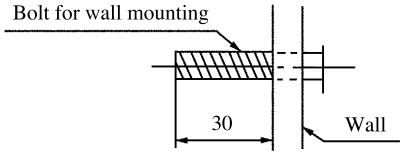

Note (1) Be sure to use a bolt of the length for wall mouning.

b) The methed of drilling the wall is as follows.

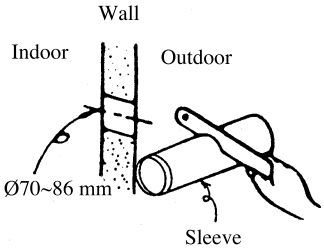

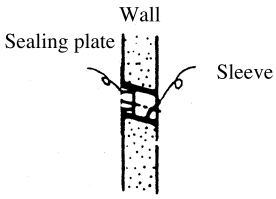

c) Remove the front and side panels.

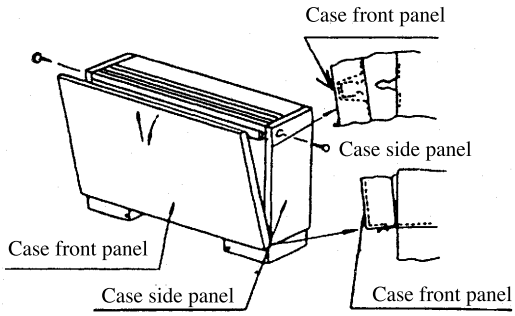

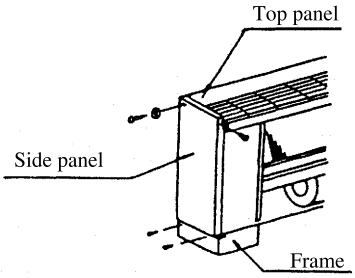

d) Level the unit using the level adjusting screw. Installation will be complrted after attaching side and front panel.

e) Exceute fixation following the directions described below.

● When fixed on the floor

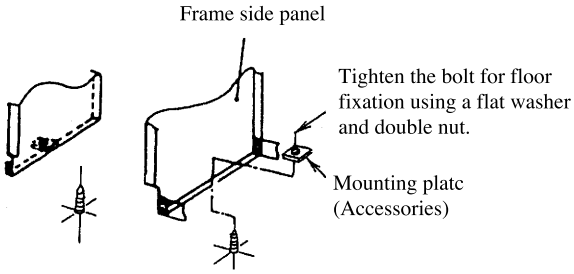

● When fixed on the wall

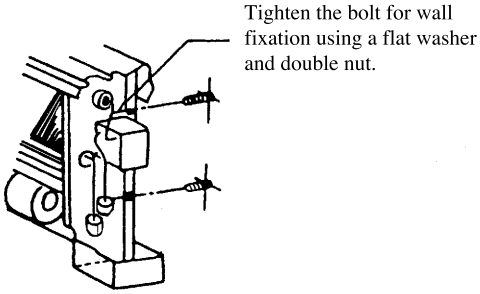

(iv) Drain piping

The drain piping can be directed to the floor or rear sides as follows.

(a) Connect a drain piping to the drain outlet and fix it by use of tigghening band.

(b) Indoor side drain piping must be thermally insulated.

(c) After finishing the drain piping, check the drainage by pouring some water in the drain pan.

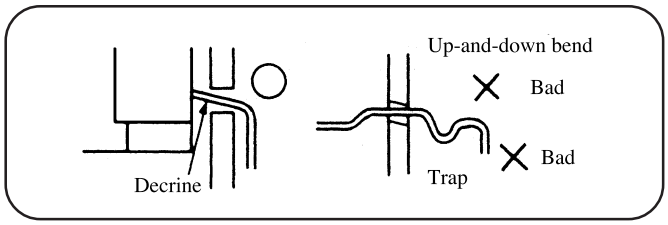

(v) Installation of remote controller (on the indoor unit)

Attached remote controller may be installed on the indoor unit as shown below. The work can be done on the spot when the customer asks so or by other reasons.

Refer to the page 274 when it is installed on the wall.

1) Detach the front panel.

Unit: mm

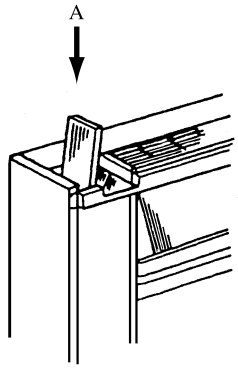

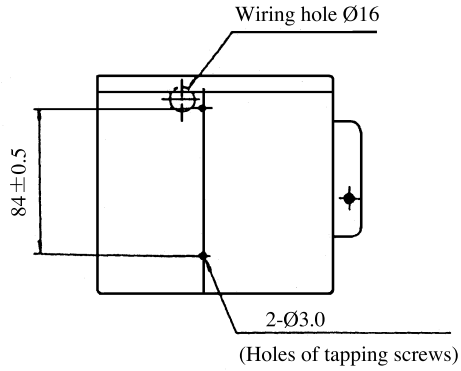

VIEW A

2) Remote controller installation.

- Attach the lower case with the screws (M4 × 12) accessory.

3) Remote controller wiring.

a) Connect the terminals between the remote controller and the control box as per these wire color codes:[(X) (white), (Y) (black)], using the wires included in the kit.

b) The wires should have a surplus length of approximately 30 cm. (Necessary when servicing with the front panel detached.)

c) In case of stranded wire strip and solder as shown below when cutting the wire. (Omitting the soldering process may cause looseness of the wiring.)

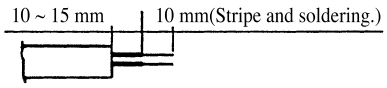

4) Wiring route.

a) Wire from the wiring hole through the rear side of the control box to the terminal block.

b) Any suplus wires should be tied up with a cable tie.

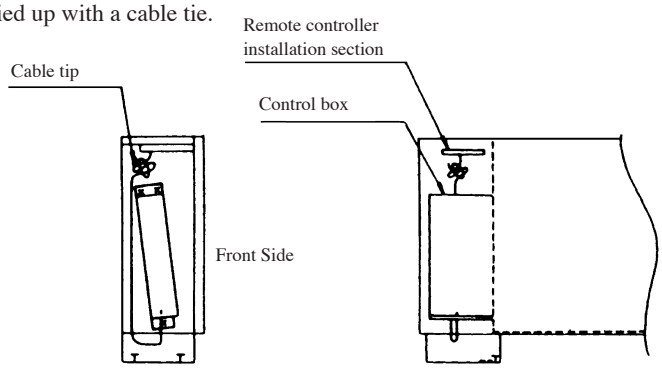

(I) Floor standing (without casing) hidden type (FDFU)

Model: All models

(i) Selection of installation hidden location

1) A place where good air circulation and delivery can be obtained.

● Cold air throw Unit : m

Models	All models
Air throw	4

[Conditions]

(1) Fan speed: Hi

(2) Location: Free space without obstacles

(3) Distance of reach indicates the horizontal distance after the wind touched down the floor.

(4) Air velocity at the throw: 0.5 (m/sec.)

2) Where there is no obstacle around the Air inlet port or Air outlet port.

3) Where a sufficient space can be reserved for the service of air filter and the attachment/removal of panels.

4) Places exposed to oil splashes or steam (e.g. kitchens and machine plants).
Installation and use at such places will incur deteriorations in the performance or corrosion with the heat exchanger or damage in molded synthetic resin parts.

5) Where pipes and wires can be arranged conveniently.

6) On the solid floor

7) Where the unit is not exposed directly to sun light.

8) Places where corrosive gas (such as sulfurous acid gas) or inflammable gas (thinner, gasoline, etc.) is generated or remains.
Installation and use at such place will cause corrosion in the heat exchanger and damage in molded synthtic resin parts.

9) Where a complete draining can be assured.

10) Where a sufficient space can be reserved for service.

Floor standing installation

• Floor fixation

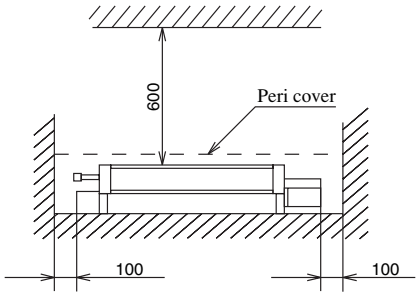

• Wall fixation

Unit : mm

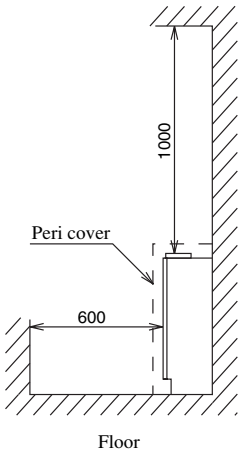

(ii) Bolt positions

1) Bolt positions for metal settings used for floor fixation.

- Metal fitting used for floor fixation (accessories).

Bolt positions for floor mounting hardware

Unit : mm

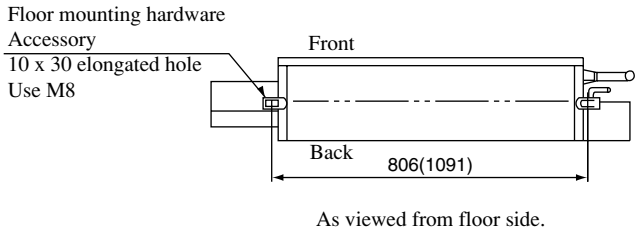

Note (1) Value in ( ) indicates 71 type.

2) Bolt positions for wall fixation

Unit : mm

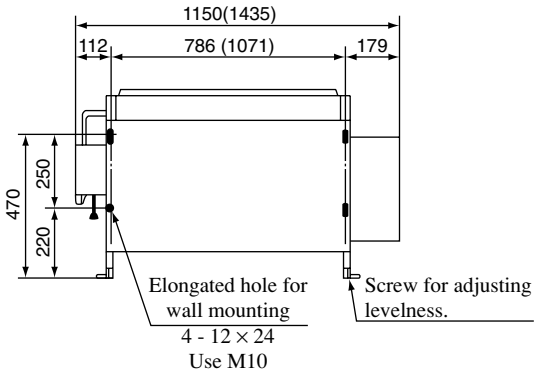

(iii) Installation of unit

1) Floor standing installation

a) Position of mounting bracket fixing bolts

Drill holes by referring to figures below.

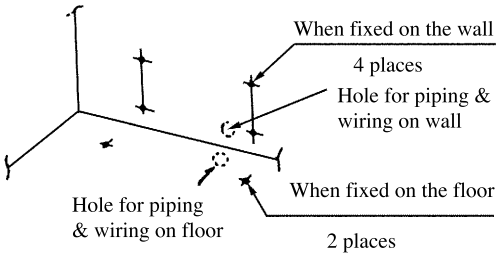

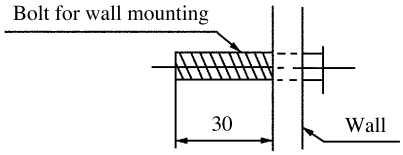

Note (1) Be sure to use a bolt of the length for wall mouning.

b) The methed of drilling the wall is as follows.

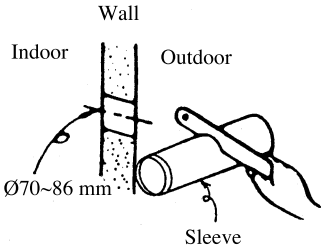

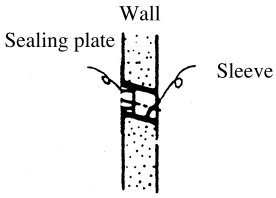

c) Level the unit using the level adjusting screw. Installation will be complrted after attaching side and front panel.

d) Exceute fixation following the directions described below.

● When fixed on the floor

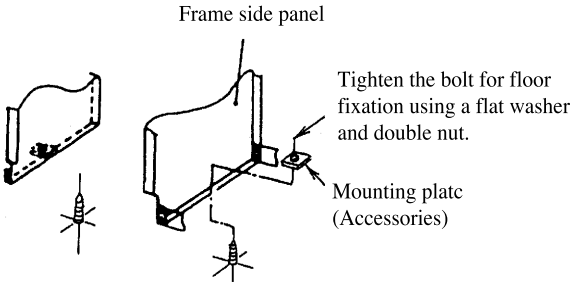

● When fixed on the wall

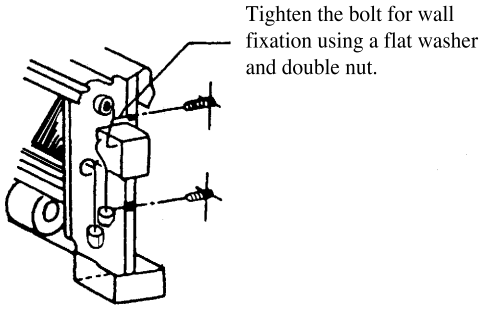

(iv) Drain piping

The drain piping can be directed to the floor or rear sides as follows.

(a) Connect a drain piping to the drain outlet and fix it by use of tigghening band.

(b) Indoor side drain piping must be thermally insulated.

(c) After finishing the drain piping, check the drainage by pouring some water in the drain pan.

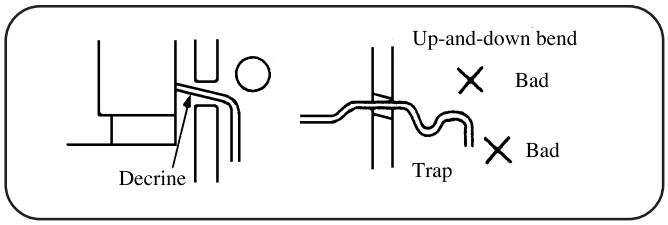

(2) Installation of remote controller (Option parts)

(a) Selection of installation location

Avoid the following locations

1) Direct sunlight.
2) Close to heating device.
3) Highly humid or water splashing area.
4) Uneven surface.

(b) Installation procedure

a) Exposed fiting

1) Open the remote controller case.

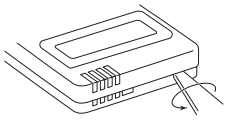

- Put a screw driver (flat-head) into the concavity made on the upper part of a remote controller and twist it lightly to open the casing.

2) The cord of a remote controller can only be pulled out in the upward direction.

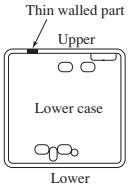

- Cut off with nippers or a knife a thin walled part made on the upper end of the rmote controller bottom casing, and then remove burrs with a file or the like.

3) Fix the remote controller bottom casing onto a wall with two wood screws supplied as accessories.

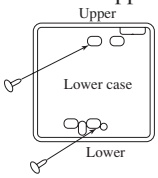

4) Connect the remote controller cord to the terminal block. Connect between the remote controller terminals (Ⓧ, Ⓨ) and the indoor unit terminals (Ⓧ, Ⓨ). (Ⓧ and Ⓨ have no polarity.)
Wiring path will be as shown below depending on the direction to take out.

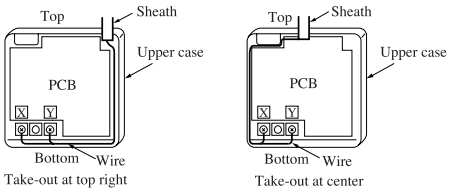

- Cord used in the remote controller should be 0.3 mm^2 - max. 0.5 mm^2. Remove a sheath for the section laid within the remote controller casing. The length of each wire that should be left after a sheath is removed is as follows.

Take-out at top right	Take-out at center
X wire: 215mm Y wire: 195mm	X wire: 170mm Y wire: 190mm

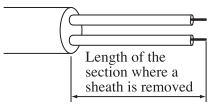

5) Replace the top casing as before.
6) Use a cord clamp to attach the remote controller cord to the wall.

(c) Recessed fitting

1) The Electrical box and remote controller (shield wire must be use in case of extension) are first embedded.

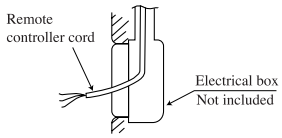

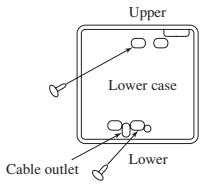

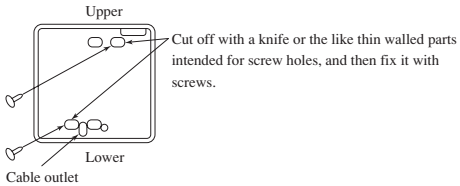

2) Remove the upper case to the remote controller.
3) Attach the lower case to the Electricl box with two M4 screws. (Head diameter must be 8 mm). Choose either of the following two positions in fixing it with screws.
4) Connect the remote controller cord to the remote controller.

   Refer to [Exposed Fitting].

5) Installation work is completed by replacing the top casing onto the bottom casing as before.
6) Set the functions according to the types of indoor unit. See section "Setting function". Refer to page 310.

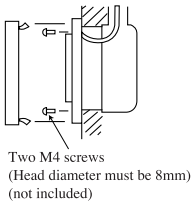

Precation in extending the remote controller cord

▶ Maximum total extension 600m.

The cord should be a shielded wire.

● For all types : 0.3mm^2 × 2 cores

Note (1) Use cables up to 0.5mm^2 (maximum) for those laid inside the remote controller casing and connect to a different size cable at a vicinity point outside the remote controller, if necessary.

Within 100-200m····· 0.5 mm^2 × 2 cores
Within 300m····· 0.75 mm^2 × 2 cores
Within 400m····· 1.25 mm^2 × 2 cores
Within 600m····· 2.0 mm^2 × 2 cores

● The shielded wire should be grounded at one side only.

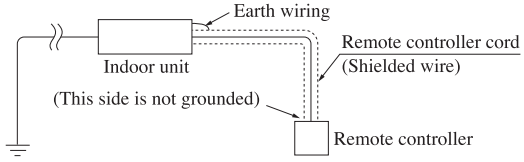

(3) Installation of outdoor unit

(a) Before beginning installation (Check that the models, power supply specifications, piping, wiring are correct.)

Indoor and outdoor unit combinations

(i) Combination can be arranged with the conditions (number of units, capacity) shown below.

Indoor unit	Remote control	Connectability
FD○△△KXE6 Series indoor unit	RC-E3 (2 cores)	OK
FD○A△△KXE4 Series indoor unit	RC-E1 (3 cores)	×

* Only indoor units of the above-listed series can be connected in the refrigerant system.

(ii) The combination is possible if in the table below condition (number of units,capacity).

Indoor unit	Outdoor unit		
	112	140	155
Number of connectable units	1 ~ 6	1 ~ 8	1 ~ 8
Total capacity of indoor units	90 ~ 168	112 ~ 210	124 ~ 232

(iii) Indoor unit model capacities

Indoor unit Model	22KXE6	28KXE6	36KXE6	45KXE6	56KXE6	71KXE6	90KXE6	112KXE6	140KXE6	160KXE6
Capacity	22	28	36	45	56	71	90	112	140	160

[Accessory]

Name	Quantity	Usage location	Attachment position
Edging	1	Use it for protection of a knock-out hole.	It is attached to the bracket with an adhesive tape in the proximity of the service valve.
User's manual	1	When the installation work is completed, give instructions to the customer and ask him/her to keep it.	It is attached to the front of a unit.
Installation kit	1	Use it to fix the wiring.	It is attached in the unit.

[Items sold separately]

Refrigerant pipe distribution parts, which are not contained in the package, will be required for installation.
As for refrigerant pipe distribution parts, we offer branching pipe sets (Model type: DIS) and header sets (Model type: HEAD) as parts used on the indoor side of piping.
Please select one suiting your application. In selecting distribution parts, please also refer to "4. REFRIGERANT PIPING."
If you are not sure which parts to select, please consult with your dealer or the manufacturer.
Use refrigerant branching pipe sets and header sets designed exclusively for R410A without fail.

(b) Installation location (Obtain approval from the customer when selecting the installation area.)

(i) Selecting the installation location

○ Where air is not trapped.
○ Where the installation fittings can be firmly installed.
○ Where any object does not prevent inlet or outlet air.
○ Out of the heat range of other heat sources.
○ Where strong winds will not blow against the outlet air.
○ A place where stringent regulation of electric noises is applicable.
○ Where it is safe for the drain water to be discharged.
○ Where noise and hot air will not bother neighboring residents.
○ Where snow will not accumulate.
○ A place where no TV set or radio receiver is placed within 5m.
(If electrical interference is caused, seek a place less likely to cause the problem)

Please note

a) If there is a possibility of a short-circuit, then install a flex flow adapter.
b) When installing multiple units, provide sufficient intake space so that a short-circuit does not occur.
c) In areas where there is snowfall, install the unit in a frame or under a snow hood to prevent snow from accumulating on it.
(Inhibition of collective drain discharge in a snowy country)
d) Do not install the equipment in areas where there is a danger for potential explosive atmosphere.
e) Install the equipment in a location that can sufficiently support the weight of the equipment.
f) If a unit is installed into a special environment as shown below, there will be a danger that the corrosion of the outdoor unit or its malfunctioning is caused. If this is the case, please consult with the distributor from whom you have purchased the unit.
- Where corrosive gas is generated (such as a hot-spring resort area).
- Where the unit is subject to sea breezes (coastal area).
- Where the unit is subject to oil mists.
- Where equipment generating electromagnetic waves exists in the vicinity.

g) When strong winds occur
- Where it is likely that the unit is subjected to strong winds, provide wind guards according to the following guidelines. Strong winds can cause performance degradation, an accidental stop due to a rise of high pressure and a broken fan.

CAUTION

Please leave sufficient clearance around the unit without fail. Otherwise, a risk of compressor and/or electric component failure may arise.

① Place the unit outlet pipe perpendicular to the wind direction.

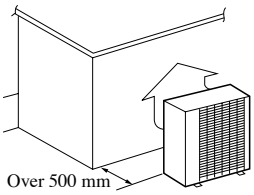

② Please install so the direction of the air from the blowing outlet will be perpendicular to the direction of the wind.

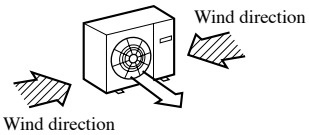

③ When the foundation is not level, use wires to tie down the unit.

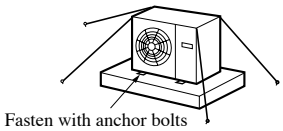

(ii) Installation space (Ex. servicing space)

a) Minimum installation space (Please select an installation point with due attention to the direction of installation of the refrigerant pipe)
(If the installation conditions shown in this drawing are not satisfied, please consult with your dealer or the manufacturer.)
b) When units are installed side by side, leave a 10 mm or wider service space between the units.
c) Walls surrounding the unit in the four sides are not acceptable.
d) There must be a 1-meter or larger space in the above.
e) A barrier wall placed in front of the exhaust diffuser must not be higher than the unit.

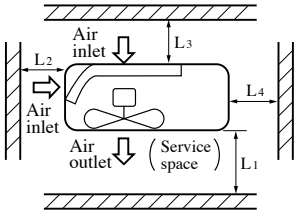

(Unit : mm)

Size \ Sample	I	II	III
L1	Open	Open	500
L2	300	5	Open
L3	150	300	150
L4	5	5	5

(c) Unit delivery and installation (Take particular care in carrying in or moving the unit, and always perform such an operation with two or more persons.)

⚠ CAUTION

When you sling the unit for portage, do not fail to take into consideration the deviation of the gravity center from its center. Improper slinging may cause the unit to lose balance and fall.

Delivery

- Deliver the unit as close as possible to the installation site before removing it from the packaging.
- If unpacked and deliver cannot be avoided, use a nylon sling or a rope with pads placed where the rope contacts the unit so it is not scratched.

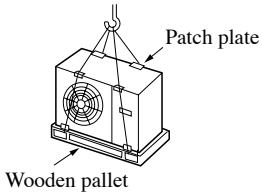

Portage

- The right hand side of the unit as viewed from the front (diffuser side) is heavier. A person carrying the right hand side must take heed of this fact. A person carrying the left hand side must hold with his right hand the handle provided on the front panel of the unit and with his left hand the corner column section.

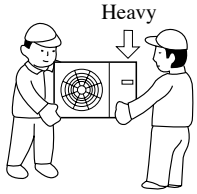

Bolt fastening positions

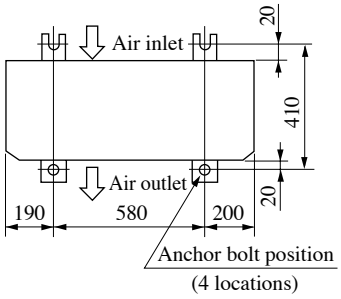

- In installing the unit, fix the unit's legs with bolts specified below.

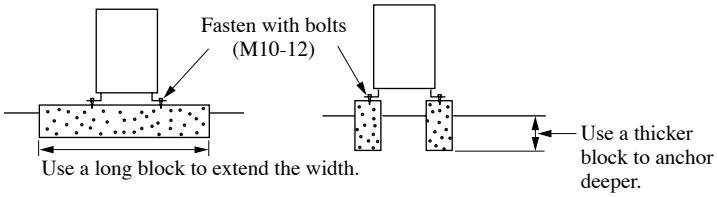

- The protrusion of an anchor bolt on the front side must be kept within 15 mm.
- Securely install the unit so that it does not fall over during earthquakes or strong winds, etc.
- Refer to the above illustrations for information regarding concrete foundations.
- Install the unit in a level area. (With a gradient of 5 mm or less.)
  Improper installation can result in a compressor failure, broken piping within the unit and abnormal noise generation.

⚠ Important

In case that the unit operates in cooling mode, when the outdoor temperature is –5°C or lower, please equip a flex flow adapter and a snow guard hood (option) on the unit.

(4) Refrigerant piping

(i) Determination of piping specifications (Please select from the following matrix according to indoor unit specifications and installation site conditions)

Refrigerant piping restrictions

Please do not fail to observe the following pipe sizes and limitations of use.
A failure to observe this instruction can result in a compressor failure or performance degradation.

- Please avoid forming any trap ( ) or bump ( ) in piping as they can cause fluid stagnation.
- Maximum length (To the farthest indoor unit) ..... Within 70m
- Equivalent length (To the farthest indoor unit) ..... Within 95m
- Total pipe length (Combined total length of pipes) ..... Within 100m
- ø9.52 pipe length ..... Within 50m
- Height difference
  (1) When the outdoor unit is above the indoor unit ..... Within 30m
  (2) When the outdoor unit is below the indoor unit ..... Within 15m
  (3) Height difference between indoor units in the same system ..... Within 15m
  (4) Height difference between indoor units and first branch ..... Within 15m

Refrigerant piping size selection

- Please use pipes clean on both the inside and outside and free from contaminants harmful to operation such as sulfur, oxides, dust, chips, oil, fat and water.
- Use the following material for refrigerant piping.
  Material: phosphorus deoxidized seamless copper pipe (C1120T-0, JIS H3300)
- Thickness and size: Please select proper pipes according to the pipe size selection guideline.
  (Since this unit uses R410A, Select pipes having a wall thickness larger than the specified minimum pipe thickness.
- For branching pipes, use a genuine branching pipe set or header set at all times.
- Install a branching pipe set, paying attention to the direction of attachment, after you have perused through the installation manual supplied with it.
- The length of piping from outdoor unit to first branch is 1.5m or more.
- For the handling of service valves, please refer to 4-2. Piping work.

① Individual flow division method

- For determination of appropriate branching joint or different diameter pipe joint sizes, please refer to "Branching Pipe Set," (which can be purchased separately).

Attention

- Please use pipes of the pipe size specified for the outdoor unit for the section between the outdoor unit and the first branching joint.
- An appropriate pipe size between branching joints can vary depending on the connected indoor unit capacity (total capacity connected downstream), please select an appropriate pipe size from the table shown on the right.
- The pipe size between the branch pipe and the indoor unit should match that of the indoor unit.
- Always install branch pipes either horizontally or vertically.

Item	Model	Gas pipe	Liquid pipe
Outdoor unit Main pipe	All model	ø15.88	ø9.52
Total capacity of indoor units	less than 70	ø12.7	ø9.52
	70 or more	ø15.88	ø9.52

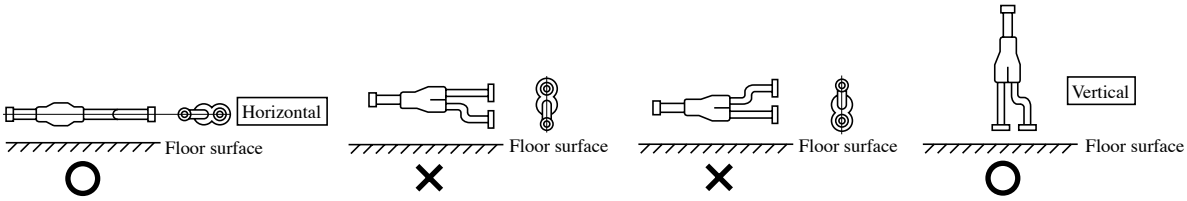

② Header Method

- Depending on the number of units connected, connect blind pipes to header branching points (on the indoor unit connection side).
- For determination of appropriate header, different diameter pipe joint and blind pipe sizes, please refer to "Header Set," (which can be purchased separately).

Attention

- For the section between an indoor unit and the header, use a pipe of the diameter specified for the indoor unit.
- To couple with the header, use a different diameter pipe joint to adjust to the pipe diameter specified for the indoor unit.
- The header must be so installed that it branches horizontally (for both gas and liquid)

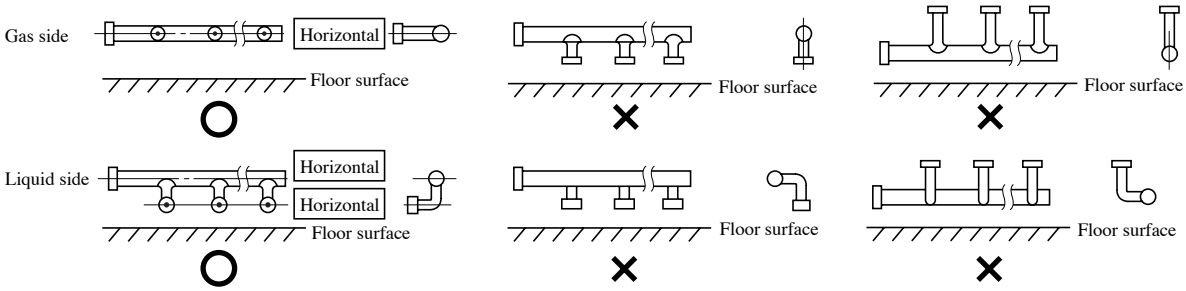

Unit piping specifications

The piping material should be phosphorus deoxidized copper seamless steel pipes. (C1220T, JIS H3300)

Item	Model	Gas side			Liquid side		
		Pipe diameter (mm)	Minimum pipe wall thickness (mm)	Connection method	Pipe diameter (mm)	Minimum pipe wall thickness (mm)	Connection method
Outdoor unit	112, 140, 155	ø15.88	1.0	Flare	ø9.52	0.8	Flare
Indoor unit	22	ø 9.52	0.8		ø6.35	0.8	
	28	ø 9.52	0.8		ø6.35	0.8	
	36	ø12.7	0.8		ø6.35	0.8	
	45	ø12.7	0.8		ø6.35	0.8	
	56	ø12.7	0.8		ø6.35	0.8	
	71	ø15.88	1.0		ø9.52	0.8	
	90	ø15.88	1.0		ø9.52	0.8	
	112	ø15.88	1.0		ø9.52	0.8	
	140	ø15.88	1.0		ø9.52	0.8	
	160	ø15.88	1.0		ø9.52	0.8	

Attention

- Always select pipes meeting the minimum wall thickness requirement.

③ Selection of on indoor unit side branching pipe set

Method of selecting a branching pipe set

- As an appropriate branching pipe size varies with the connected capacity (total capacity connected downstream), determine a size from the following table.

a) KX series

Total capacity downstream	Branching pipe set
Less than 180	DIS-22-1
180 or more but less than 371	DIS-180-1

Notes (1) In connecting an indoor unit with the indoor unit side branching pipe set, plase use a pipe conforming to the pipe size specified for indoor unit connection.
(2) Always install branching joints (for suction gas, discharge gas and liquid) in such a manner that that they form either correct horizontal or vertical branch.

- Branch pipe set shapes

Unit: mm

Model	Item	Branch pipe	Reducer	Item	Branch pipe	Reducer
DIS-22-1	Gas line	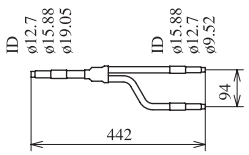	———	Liquid line	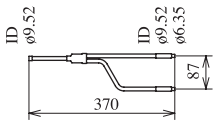	———
DIS-180-1	Gas line	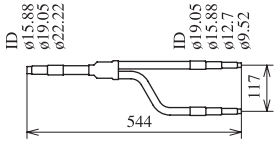		Liquid line	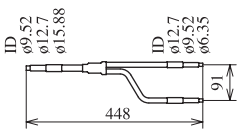	

Notes (1) Insulation is provided with the branch pipes.
(2) Pipes should be cut to the installation site requirements, with the pipe being severed at the center part of the desired diameter.
(3) Branch joints (gas & liquid) must be installed as either a "horizontal branch" or a "vertical branch".

④ Header Method

- Depending on the number of units connected, connect plugged pipes (to be procured on the installer's part) at a branching point (on the indoor unit connection side).
- For determination of appropriate header, different diameter pipe joint and blind pipe sizes, please refer to "Header Set," (which can be purchased separately).

Total capacity downstream	Header set model type	Number of branches
Less than 180	HEAD4-22-1	4 branches at the most
180 or more but less than 371	HEAD6-180-1	6 branches at the most

- Header pipe set shapes

Unit: mm

Model	Item	Header pipe	Reducer	Item	Header pipe
HEAD4-22-1	Gas line	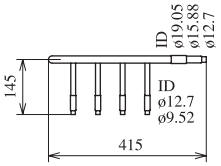	———	Liquid line	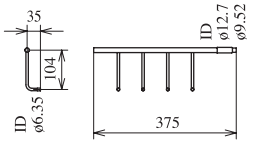
HEAD6-180-1	Gas line	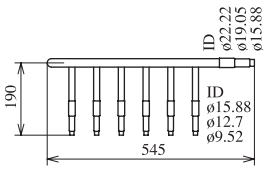	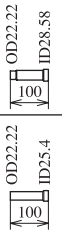	Liquid line	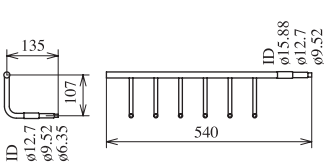

Notes (1) Insulation is provided with the branch pipes.
(2) Pipes should be cut to the installation site requirements, with the pipe being severed at the center part of the desired diameter.
(3) Branch joints (gas & liquid) must be installed as either a "horizontal branch" or a "vertical branch".
(4) Indoor units 224 and 280 can not connected to the header.

Example of piping

■ Branch system
Outdoor unit: FDC155KXES6
Indoor unit: Combination of 8 units
[Branch pipe set : DIS-22-1 × 7 set]
[Total capacity: 176]

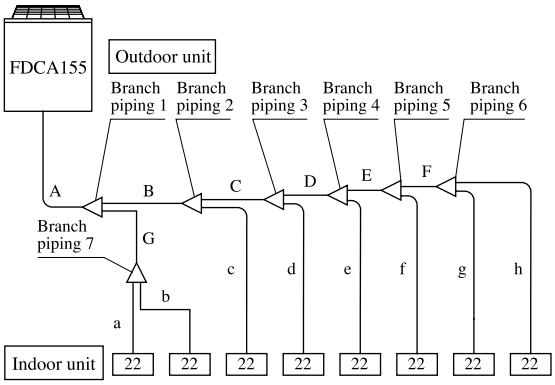

• Selecting piping size

Item	Selection procedure	Piping size (mm)	
		Gas line	Liquid line
A	Same as the outdoor unit piping size	ø15.88	ø9.52
B	Total capacity of the connected indoor units 132	ø15.88	ø9.52
C	Total capacity of the connected indoor units 110	ø15.88	ø9.52
D	Total capacity of the connected indoor units 88	ø15.88	ø9.52
E	Total capacity of the connected indoor units 66	ø12.7	ø9.52
F	Total capacity of the connected indoor units 44	ø12.7	ø9.52
G	Total capacity of the connected indoor units 44	ø12.7	ø9.52
a	Indoor unit piping size (22).	ø9.52	ø6.35
b	Indoor unit piping size (22).	ø9.52	ø6.35
c	Indoor unit piping size (22).	ø9.52	ø6.35
d	Indoor unit piping size (22).	ø9.52	ø6.35
e	Indoor unit piping size (22).	ø9.52	ø6.35
f	Indoor unit piping size (22).	ø9.52	ø6.35
g	Indoor unit piping size (22).	ø9.52	ø6.35
h	Indoor unit piping size (22).	ø9.52	ø6.35

• Selection of branch piping size.

Item	Selection procedure	Branch piping set
Branch piping 1	Total capacity of the connected indoor units 176	DIS-22-1
Branch piping 2	Total capacity of the connected indoor units 132	DIS-22-1
Branch piping 3	Total capacity of the connected indoor units 110	DIS-22-1
Branch piping 4	Total capacity of the connected indoor units 88	DIS-22-1
Branch piping 5	Total capacity of the connected indoor units 66	DIS-22-1
Branch piping 6	Total capacity of the connected indoor units 44	DIS-22-1
Branch piping 7	Total capacity of the connected indoor units 44	DIS-22-1

Notes (1) Make the selection based on the size of each piping for branch piping sets with different size connections.
(2) If diameter adjustment is need for branch connection and on the indoor unit side, always makes the adjustment at the branch connection.

Notes (1) Use the designated piping size for the piping between the outdoor unit and the first branch.
(2) Choose the appropriate sized reducer for piping between the branch pipe and the indoor unit.
The size of reducer should match the piping size of the indoor unit.
(3) Locate the branch pipe horizontally or vertically as illustrated on the right.

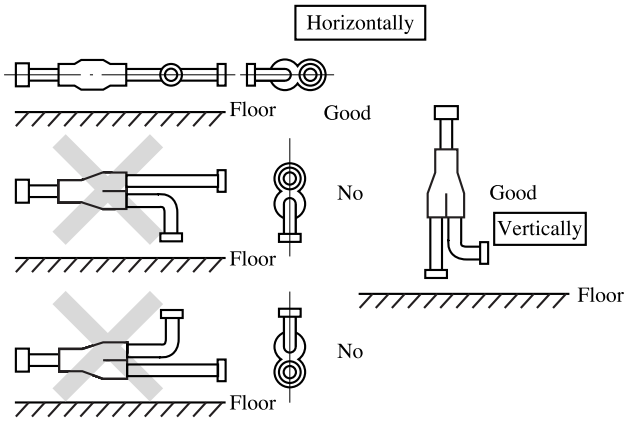

■ **Header system**

Outdoor unit: FDC155KXES6
Indoor unit: Combination of 6 units
[Header pipe set : HEAD6-180-1 × 1 set]
[Total capacity: 208]

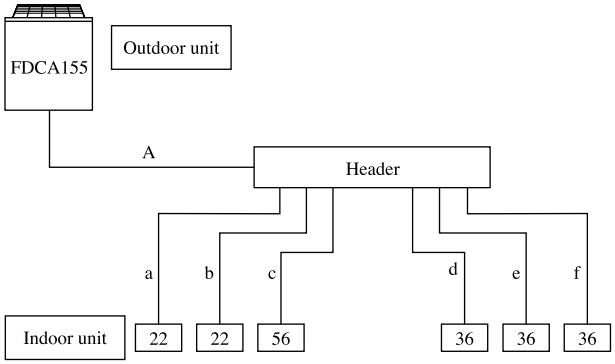

• Selecting piping size

Item	Selection procedure	Piping size (mm)	
		Gas line	Liquid line
A	Same as the outdoor unit piping size	ø15.88	ø9.52
a	Indoor unit piping size (22)	ø9.52	ø6.35
b	Indoor unit piping size (22)	ø9.52	ø6.35
c	Indoor unit piping size (56)	ø12.7	ø6.35
d	Indoor unit piping size (36)	ø12.7	ø6.35
e			
f			

Remarks (1) Install the header so that both the gas pipe and liquid pipe are horizontal and so that branches are horizontal.

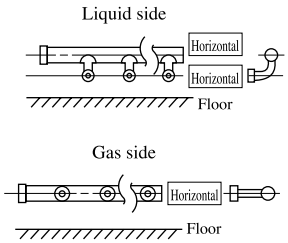

(2) It is not necessary to install a trap in the stand pipe.

• Selection header pipe size

Item	Selection point	Model
Header	Total indoor unit capacity	HEAD6-180-1

Notes(1) Select the appropriate size of each pipe for the offset pipe joints included with the header set.

(2) If it is necessary to adjust the diameter of the header and indoor unit side piping, be sure to do so on the header side.

(ii) Piping work

Piping connection position and the piping remove direction

- First remove the five screws (× mark) of the service panel and push it down into the direction of the arrow mark and then remove it by pulling it toward you.
- The pipe can be laid in any of the following directions: side right, front, rear and downward.
- Remove a knock-out plate provided on the pipe penetration to open a minimum necessary area and attach an edging material supplied as an accessory by cutting it to an appropriate length before laying a pipe.
- In laying pipes on the installation site, cut off the casing's half blank that covers a hole for pipe penetration with nippers.
- If there is a risk of small animals entering from the pipe penetration part, close the part with some sealing material or the like (to be arranged on the installer's part).
- In the case of an installation using a collective drain system, use a port other than the bottom one to take out cables and pipes. If the bottom port is used, seal it thoroughly so that drain water may not spill out.
- Use an elbow (to be arranged on the user's part) to connect control valves to the piping.
- In anchoring piping on the installation site, give 1.5m or a longer distance between an outdoor unit and an anchoring point where the piping is secured as illustrated below. (A failure to observe this instruction may result in a pipe fracture depending on a method of isolating vibrations employed.)

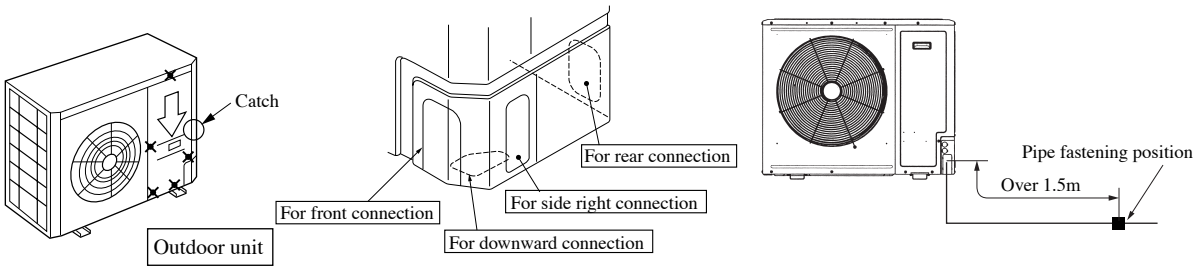

a) On-site piping work

Important

- Please take care so that installed pipes may not touch components within a unit.
- **During the pipe installation at site, keep the service valves shut all the time.**
- Give **sufficient protections** (compressed and brazed or by an adhesive tape) **to pipe ends so that any water or foreign matters may not enter the pipes.**

CAUTION

If you tighten it without using double spanners, you may deform the service valve, which can cause an inflow of nitrogen gas into the outdoor unit.

- In bending a pipe, bend it **to the largest possible radius (at least four times the pipe diameter).** Do not bend a pipe repeatedly to correct its form.
- An outdoor unit's pipe and refrigerant piping are to be flare connected. Flare a pipe after engaging a flare nut onto it. A flare size for R410A is different from that for conventional R407C. Although we recommend the use of flaring tools developed specifically for R410A, conventional flaring tools can also be used by adjusting the measurement of protrusion B with a protrusion control gauge.
- Tighten a flare joint securely **with two spanners.** Observe flare nut tightening torque specified in the table below.

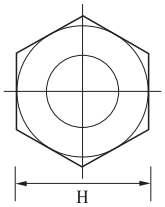

Flare nut parallel side measurement: H (mm)

Copper pipe outer diameter	H
ø6.35	17
ø9.52	22
ø12.7	26
ø15.88	29

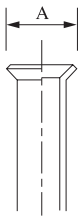

Flared pipe end: A (mm)

Copper pipe outer diameter	A $^{0}_{-0.4}$
ø6.35	9.1
ø9.52	13.2
ø12.7	16.6
ø15.88	19.7

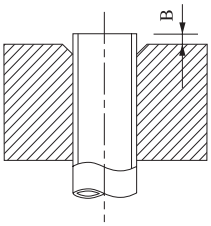

Copper pipe protrusion for flaring: B (mm)

Copper pipe outer diameter	In the case of a rigid (clutch) type	
	With an R410A tool	With a conventional tool
ø6.35	0 ~ 0.5	0.7 ~ 1.3
ø9.52		
ø12.7		
ø15.88		

Fix both liquid and gas service valves at the valve main bodies as illustrated on the right, and then fasten them, applying appropriate fastening torque.

Service valve size (mm)	Tightening torque (N-m)	Tightening angle (°)	Recommended length of a tool handle (mm)
ø6.35 (1/4")	14 ~ 18	45 ~ 60	150
ø9.52 (3/8")	34 ~ 42	30 ~ 45	200
ø12.7 (1/2")	49 ~ 61	30 ~ 45	250
ø15.88(5/8")	68 ~ 82	15 ~ 20	300

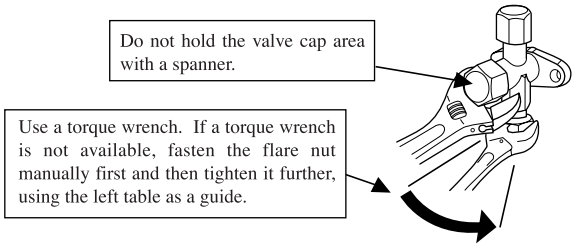

- Do not apply any oil on a flare joint.
- **Blazing must be performed under a nitrogen gas flow.** Without nitrogen gas, a large quantity of foreign matters (oxidized film) are created, causing a critical failure from capillary tube or expansion valve clogging.
- Brazing of the service valve and the pipes should be performed while cooling the valve body with a wet towel.
- Perform flushing. To flush the piping, charge nitrogen gas at about 0.02MPa with a pipe end closed with a hand. When pressure inside builds up to a sufficient level, remove the hand to flush. (in flushing a pipe, close the other end of the pipe with a plug).

Operation procedure

① **During the pipe installation at site, keep the service valves shut all the time.**

② **Blazing must be performed under a nitrogen gas flow.** Without nitrogen gas, a large quantity of foreign matters (oxidized film) are created, causing a critical failure from capillary tube or expansion valve clogging.

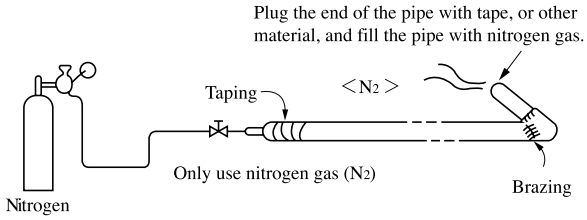

③ Give **sufficient protections** (compressed and brazed or with an adhesive tape) **so that water or foreign matters may not enter the piping.**

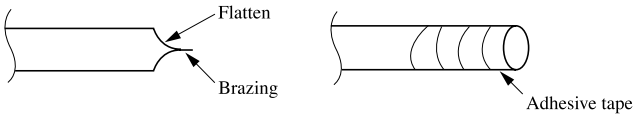

④ Perform flushing. To flush the piping, charge nitrogen gas at about 0.02MPa with a pipe end closed with a hand. When pressure inside builds up to a sufficient level, remove the hand to flush. (in flushing a pipe, close the other end of the pipe with a plug).

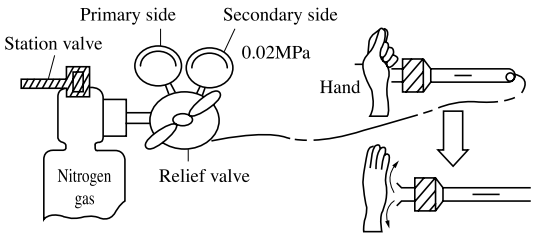

(iii) Air tightness test and air purge (Carry them out according to the following steps.)

Air tightness test

① Although an outdoor unit itself has been tested for air tightness at the factory, please check the connected pipes and indoor units for air tightness from the check joint of the service valve on the outdoor unit side. While conducting a test, **keep the service valve shut all the time.**

② Since refrigerant piping is pressurized to the design pressure of a unit with nitrogen gas for testing air tightness, please connect instruments according the drawing below.
Under no circumstances should chlorine-based refrigerant, oxygen or any other combustible gas be used to pressurize a system
Keep the service valve shut all the time. Do not open it under any circumstances.
Be sure to pressurize all of the liquid, gas pipes.

> **CAUTION**
> Applying excessive pressure can cause an inflow of nitrogen gas into an outdoor unit.

③ In pressurizing the piping, do not apply the specified level of pressure all at once, but gradually raise pressure.

a) **Raise the pressure to 0.5 MPa, and then stop. Leave it for five minutes or more** to see if the pressure drops.

b) **Then raise the pressure to 1.5 MPa, and stop. Leave it for five more minutes** to see if the pressure drops.

c) Then raise the pressure to the specified level (4.15 MPa), and record the ambient temperature and the pressure.

d) **If no pressure drop is observed with an installation pressurized to** the specified level **and left for about one day, it is acceptable.** When the ambient temperature changes 1°C, the pressure also changes approximately 0.01 MPa. The pressure, if changed, should be compensated for.

e) If a pressure drop is observed in checking e) and a) - d), a leak exists somewhere. Find a leak by applying bubble test liquid to welded parts and flare joints and repair it. After repair, conduct an air-tightness test again.

④ Always pull air from the pipes after the airtightness test.

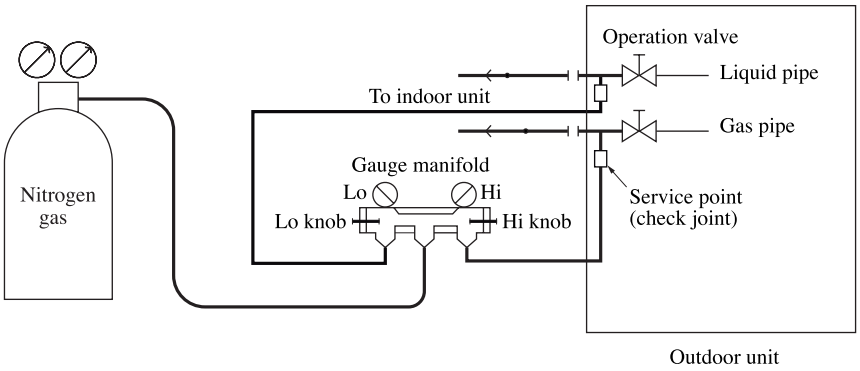

Vacuuming

Please pull air **from the check joints of the service valves on both liquid and gas sides.**

<Work flow>

When the system has remaining moisture inside or a leaky point, the vacuum gauge indicator will rise.
Check the system for a leaky point and then draw air to create a vacuum again.

Please run the vacuum pump for at least one hour after the vacuum gauge shows -101kPa or lower. (-755mmHg or lower)

Confirm that the vacuum gauge indicator does not rise **after leaving the system for an hour or more.**

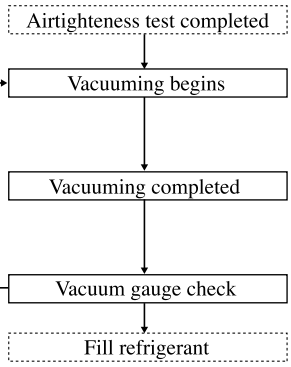

> **CAUTION**
> Insufficient vacuuming may result in poor performance falling short of the design capacity, pipe clogging due to residue moisture and/or a compressor failure.

Pay attention to the following points in addition to the above for the R410A and compatible machines.

○ To prevent a different oil from entering, please assign dedicated tools, etc. to each refrigerant type. Under no circumstancescharge hose in particular be shared with other refrigerant types (R22, R407C, etc.).

○ Use a counterflow prevention adapter to prevent vacuum pump oil from entering the refrigerant system.

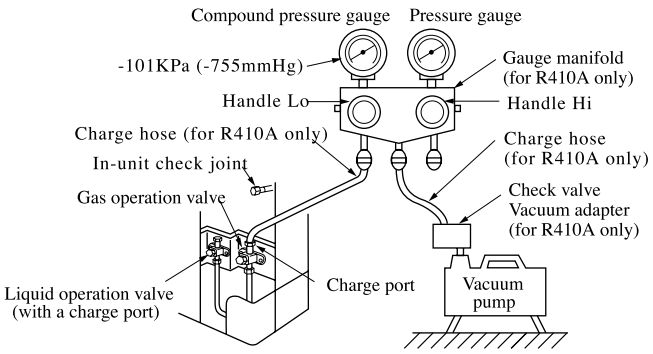

● You can purge air with either liquid service valve or gas service valve.

When a vacuum air purge is completed, remove the valve rod cap nuts and open the service valves (both liquid and gas sides) as illustrated below. After you have made sure that the valves are in the full-open position, tighten the cap nuts (for the valve rods and charge ports).

▶ Hexagonal wrench type

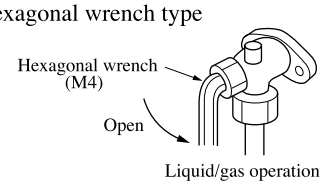

● Open the valve rod until it touches the stopper.
You need not apply force to push it further.

▶ Pin type

Remove the hexagon cap nut, set it as illustrated in the drawing below.

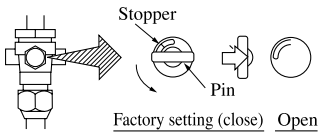

For tightening torque, refer to the table below.

Service valve size (mm)	Tightening torque (N-m)	Cap tightening torque (N · m)	Cap nut tightening torque of check joint (N · m)
ø9.52 (3/8")	6 ~ 8	20 ~ 30	10 ~ 12
ø15.88(5/8")	14 ~ 16	30 ~ 40	10 ~ 12

• When an operation is completed, replace the cap nut and tighten it as before.
• Shaft operation, cap and cap nut is performed by excessive torque, it will become failure and a cause of a leak, please follow a table.

(iv) Additional refrigerant charge

Additional refrigerant charge

Charge additional refrigerant **in the liquid state.**

Be sure to measure the quantity **with a scale in adding refrigerant.**

If you cannot charge all refrigerant with the outdoor unit lying idle, charge it with the unit running in the test run mode. (For the test run method, please refer to Section 8)

If operated for a long time with insufficient refrigerant the compressor will be damaged. (In particular, when adding refrigerant during operation, complete the job within 30min.)

Fill this unit only with the standard amount of refrigerant (piping length 0m fill quantity).

Determine the amount of refrigerant to be charged additionally using the following formula and put down the amount of refrigerant added on the refrigerant charge volume recording plate provided on the back of the side panel.

- **Adding additional refrigerant**

Charge additional refrigerant according to the size and length of the liquid piping

Determine additional charge volume by rounding to the nearest 0.1 kg.

Item / Capacity	Standard refrigerant charge volume (kg)	Pipe length for baseline charge volume (m)	Additional charge volume (kg) per meter of refrigerant piping (liquid pipe)	Refrigerant volume charged for shipment at the factory (kg)	Installation's pipe length (m) covered without additional refrigerant charge
112, 140, 155	3.38	0	0.054	5.0	30

Refrigerant pipe size	ø9.52	ø6.35
Additional charge volume (kg)	0.054	0.022

- A standard refrigerant charge volume means a refrigerant charge volume for an installation with 0m long refrigerant piping.
- **This unit contains factory charged refrigerant covering 30m of refrigerant piping and additional refrigerant charge on the installation site is not required for an installation with up to 30m refrigerant piping.**
  When refrigerant piping exceeds 30m, additionally charge an amount calculated from the pipe length and the above table for the portion in excess of 30m.

Formula to calculate the volume of additional refrigerant required

Model112,140,155	Total refrigerant (necessary) charge volume (kg) = Standard refrigerant charge 3.38kg + ø9.52 Total length of liquid pipes (m) x 0.054(kg/m) + ø6.35 Total length of liquid pipes (m) x 0.022 Additional charge volume (kg) = Total refrigerant (necessary) charge volume (kg) - Factory charged volume 5 (kg)

* When an additional charge volume calculation result is negative, it is not necessary to charge refrigerant additionally.

- **If the pipe length is shorter than 5 m, you should charge a reduced refrigerant volume.**
  Recover the refrigerant from the system and charge the standard refrigerant charge + the amount for liquid pipe.

Pay attention to the following points in addition to the above for the R410A and compatible machines.

- To prevent a different oil from entering, please assign dedicated tools, etc. to each refrigerant type. Under no circumstances must a gauge manifold and a charge hose in particular be shared with other refrigerant types (R22, R407C, etc.).
- Refrigerant types are indicated by color at the top of the cylinder. (Pink for R410A). Always confirm this.
- Do not use a charge cylinder under any circumstances. There is a danger that the composition of the refrigerant will change when R410A is transferred to a cylinder.
- When charging refrigerant, use liquid refrigerant from a cylinder.
- Use a Adverse current prevention adapter so that vacuum pump oil does not mix in a system.

(v) Heat insulation for prevention of dew condensation

① Dress refrigerant pipes (both gas and liquid pipes) for heat insulation and prevention of dew condensation. Improper heat insulation/anti-dew dressing can result in a water leak or dripping causing damage to household effects, etc.

② Use a heat insulating material that can withstand 120°C or a higher temperature. Poor heat insulating capacity can cause heat insulation problems or cable deterioration.

- All gas pipes must be securely heat insulated in order to prevent damage from dripping water that comes from the condensation formed on them during a cooling operation or personal injury from burns because their surface can reach quite a high temperature due to discharged gas flowing inside during a heating operation.
- Wrap indoor units' flare joints with heat insulating parts (pipe cover) for heat insulation (both gas and liquid pipes).
- Give heat insulation to both gas and liquid side pipes. Bundle a heat insulating material and a pipe tightly together so that no gaps may be left between them and wrap them together with a connecting cable by a dressing tape.
- Although it is verified in a test that this air conditioning unit shows satisfactory performance under JIS condensation test conditions, both gas and liquid pipes need to be dressed with 10-20mm heat insulation materials additionally above the ceiling where relative humidity exceeds 70%.

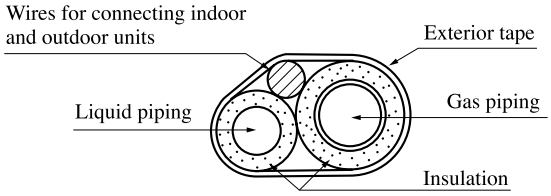

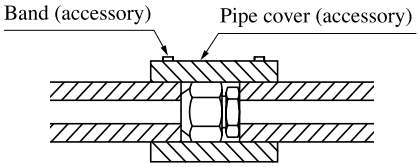

(e) Drainage

- Where drain water from the outdoor unit causes problems, implement drain piping with drain elbows and drain grommets, which are supplied separately as option parts.
- There are 3 holes in the bottom panel of the outdoor unit to drain condensation.
- Where condensate is guided to a drain, install the unit on a flat base (an option part supplied separately) or concrete blocks.
- Connect a drain elbow as illustrated and plug the other holes with grommets.

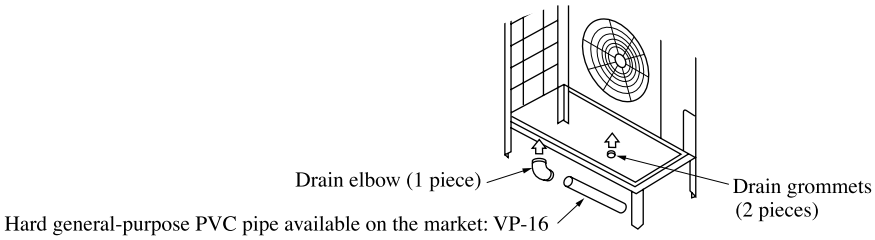

(5) Electrical wiring work

Electrical installation work must be performed by an electrical installation service provider qualified by a power provider of the country.

Electrical installation work must be executed according to the technical standards and other regulations applicable to electrical installations in the country.

⚠ **Please install an earth leakage breaker without fail.** The installation of an earth leakage breaker is compulsory in order to prevent electric shocks or fire accidents.

(Since this unit employs inverter control, please **use an impulse withstanding type** to prevent an earth leakage breaker's false actuation.)

Please note

a) Use only copper wires.
Do not use any supply cord lighter than one specified in parentheses for each type below.
- braided cord (code designation 60245 IEC 51), if allowed in the relevant part 2;
- ordinary tough rubber sheathed cord (code designation 60245 IEC 53);
- flat twin tinsel cord (code designation 60227 IEC 41)
- ordinary polyvinyl chloride sheathed cord (code designation 60227 IEC 53).

Please do not use anything lighter than polychloroprene sheathed flexible cord (cord designation 60245 IEC57) for supply cords of parts of appliances for outdoor use.

b) **Use separate power supplies for the indoor and outdoor units.**

c) **The power supplies for indoor units in the same system should turn on and off simultaneously.**

d) Ground the unit. Do not connect the grounding wire to a gas pipe, water pipe, lightning rod or telephone grounding wire. A grounding wire must be connected before connecting the power cable. Provide a grounding wire longer than the power cable.
If improperly grounded, an electric shock or malfunction may result.

e) **The installation of an impulse with standing type earth leakage breaker is necessary.** A failure to install an earth leakage breaker can result in an accident such as an electric shock or a fire. Do not turn on the power until the electrical work is completed. Be sure to turn off the power when servicing.

f) Please do not use a condensive capacitor for power factor improvement under any circumstances. (It does not improve power factor, while it can cause an abnormal overheat accident)

g) For power supply cables, use conduits.

h) Please **do not lay electronic control cables (remote control and signaling lines) and other high current cables together outside the unit.** Laying them together can result in malfunctioning or a failure of the unit due to electric noises.

i) Power cables and signaling lines must always be connected to the terminal block and secured by cable fastening clamps provided in the unit.

j) Fasten cables so that they may not touch the piping, etc.

k) **When cables are connected, please make sure that all electrical components within the electrical component box are not free or not loose on the terminal connection** and then attach the cover securely. (Improper cover attachment can result in malfunctioning or a failure of the unit, if water penetrates into the box.)

Wiring system diagrams (The example of combination)

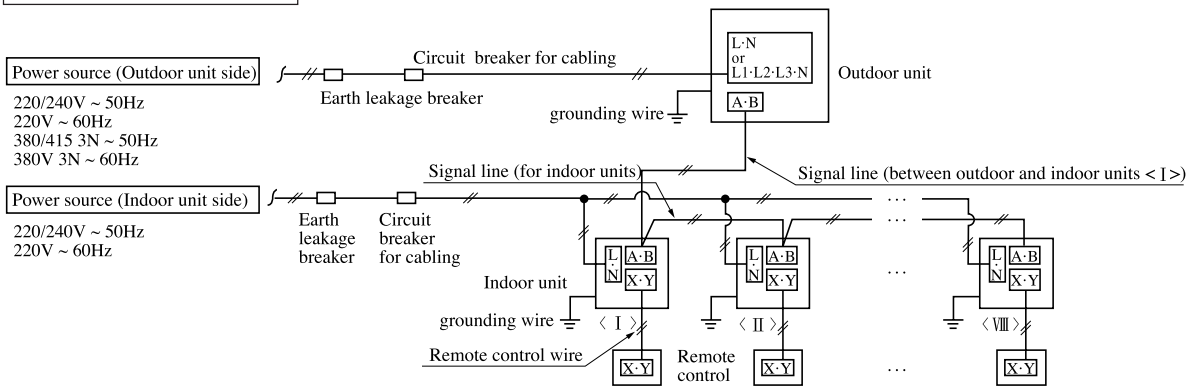

CAUTION

If the earth leakage breaker is exclusively for ground fault protection, then you will need to install a circuit breaker for wiring work.

Method of connecting power cables

① Method of leading out cables

- As shown on the drawing in Section 4-2, cables can be laid through the front, right, left or bottom casing.
- In wiring on the installation site, cut off a half-blank covering a penetration of the casing with nippers.
- In the case of an installation using a collective drain system, use a port other than the bottom one to take out cables and pipes.
  If the bottom port is used, seal it thoroughly so that drain water may not spill out.

② Notabilia in connecting power cables

- Connect the ground wire before you connect the power cable. When you connect a grounding wire to a terminal block, use a grounding wire longer than the power cable so that it may not be subject to tension.
- Do not turn on power until installation work is completed. Turn off power to the unit before you service the unit.
- Always connect power cables to the power terminal block.
- To connect a cable to the power terminal block, use a round crimp contact terminal.
  If two cables are to be connected to one terminal, arrange cables in such a manner that you put their crimp contact terminals together back to back. Further, put the thinner cable above the thicker one in arranging cables for such connection.
- Use specified wires in wiring, and fasten them securely in such a manner that the terminal blocks are not subject to external force.
- In fastening a screw of a terminal block, use a correct-size driver. Fastening a screw of a terminal block with excessive force can break the screw.
- When electrical installation work is completed, make sure that all electrical components within the electrical component box are free of loose connector coupling or terminal connection.

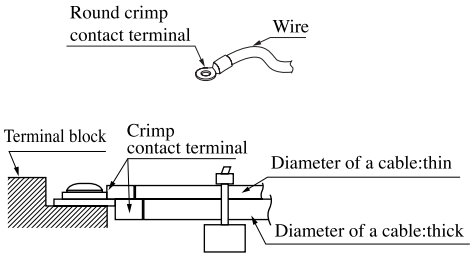

Power source specifications

① Outdoor unit power source (Indoor unit is another power source.)

Model	Power source	Cable size for power source (mm²)	Wire length (m)	Moulded-case circuit breaker (A)		Earth leakage breaker	Earth wire	
				Rated current	Switch capacity		Size (mm²)	Screw type
112KXEN6	Single-phase 220/240V 50Hz 220V 60Hz	8	32	40	50	40A, 30mA less than 0.1 sec	2	M5
140KXEN6								
155KXEN6								
112KXES6	Three-phase 380/415V 50Hz 380V 60Hz	3.5	46	20	30	20A, 30mA less than 0.1 sec	2	M4
140KXES6								
155KXES6								

② Indoor unit power source (Outdoor unit is another power source.) & signal line

Combined total capacity of indoor units	Cable size for power source (mm²)	Wire length (m)	Moulded-case circuit breaker (A)		Earth leakage breaker	Signal line (mm²)	
			Rated current	Switch capacity		outdoor-indoor	indoor-indoor
less than 7A	2	21	20	30	20A, 30mA less than 0.1 sec	2 core 2 0.75*	
less than 11A	3.5						
less than 12A	5.5	33	30		30A, 30mA less than 0.1 sec		
less than 16A	5.5	24					

*Please use a shielded cable.

Please note

a) The method of laying cables has been determined pursuant to the Japanese indoor wiring regulations (JEAC8001). (Please adapt it to the regulations in effect in each country)

b) Wire length in the table above is the value for when the indoor unit is connect to the power cable in series also the wire size and minimum length when the power drop is less than 2% are shown. If the current exceeds the value in the table above, change the wire size according to the indoor wiring regulations. (Please adapt it to the regulations in effect in each country)

c) For details, please refer to the installation manual supplied with the indoor unit.

How to connect signal cables

The communication protocol can be choosen from following two types. One of them is the conventional Superlink (hereinafter previous SL) and the other is the new Superlink II (hereinafter new SL) . These two communication protocols have the following advantages and restrictions, so please choose a desirable one meeting your installation conditions such as connected indoor units and centralized controller. When signal cables are connected into a network involving outdoor units, indoor units or centralized control equipment that do not support new SL, please select communications in the previous SL mode, even if the refrigerant system is separated from theirs.

Communication protocol	Conventional communication protocol (previous SL)	New communication protocol (new SL)
Outdoor unit setting (SW5-5)	ON	OFF (factory setting)
No. of connectable indoor units in a network	Max. 48	Max. 128
No. of connectable outdoor units in a network	Max. 48	Max. 32
Signal cable (total length)	Up to 1000m	Up to 1500m (When 0.75mm² shielded cable used) Up to 1000m (When 1.25mm² shielded cable used)
Signal cable (furthest length)	Up to 1000m	Up to 1000m
Connectable units to a network	Units not supporting new SL (FD○A△△KXE4 series) Units supporting new SL (FD ○△△KXE6 series) Can be used together. (*1)	Units supporting new SL (FD○△△ KXE6 series)

*1 New SL supporting units and non-supporting units cannot be used together in a same refrigerant system.

- **A signal cable system is operated at DC5V, so never connect it to the power source 220/240V or 380/415V.** If the power source is applied, a protective fuse provided on the board will be actuated. If the protective fuse is actuated, follow the procedure set out below.
  (1) Turn off power and make sure that 220/240V or 380/415V is not applied to signaling wires.
  (2) In the case of an indoor unit, switch from CNK1 to CNK2 and cut the jumper line J21.
  (3) In the case of an outdoor unit, switch from CNX1 to CNX2 and cut the jumper line J10.
  (4) Check signal cable terminal block resistance before you turn on power. If the resistance value is 100 ohms or less, there is possibility that a power cable is connected to a signal cable terminal block.
  A typical resistance value is [46000 / (No. of connected FD ○A△△ KXE4 series units x 5) + (No. of connected FD ○△△ KXE6 series units x 9)].
  If the resistance value is 100 ohms or less, tentatively detach signal cables and thus, divide the network into more than one block (to reduce the number of indoor units connected in a network) to check for cabling errors in each such block.

Indoor and outdoor signal wires

- Connect the signal line between indoor unit and outdoor unit to A1 and B1.
- Connect the signal line between outdoor units to A2 and B2.
- Please use a shielded cable for a signal line and connect a shielding earth at all the indoor units and outdoor units.

(1) When one outdoor unit is used.

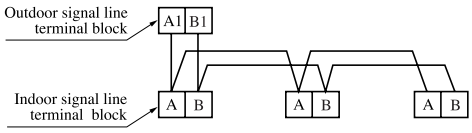

○ Indoor and outdoor signal lines do not have a polarity.
Any of the connections in the following illustration can be made.

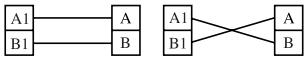

(2) When plural outdoor units are used

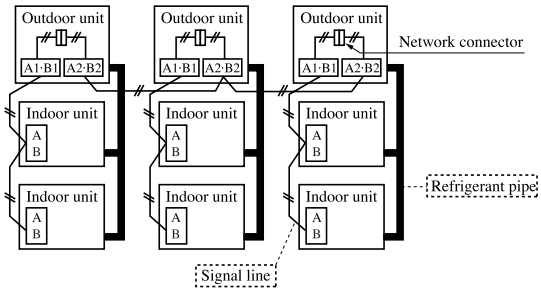

(1) The signal lines can also be connected using the method shown below.

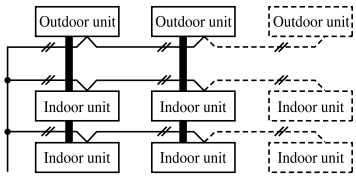

⚠ Important ○ Loop wiring prohibited.

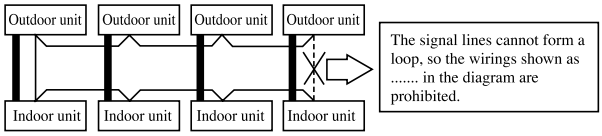

Power cable and signal line connection

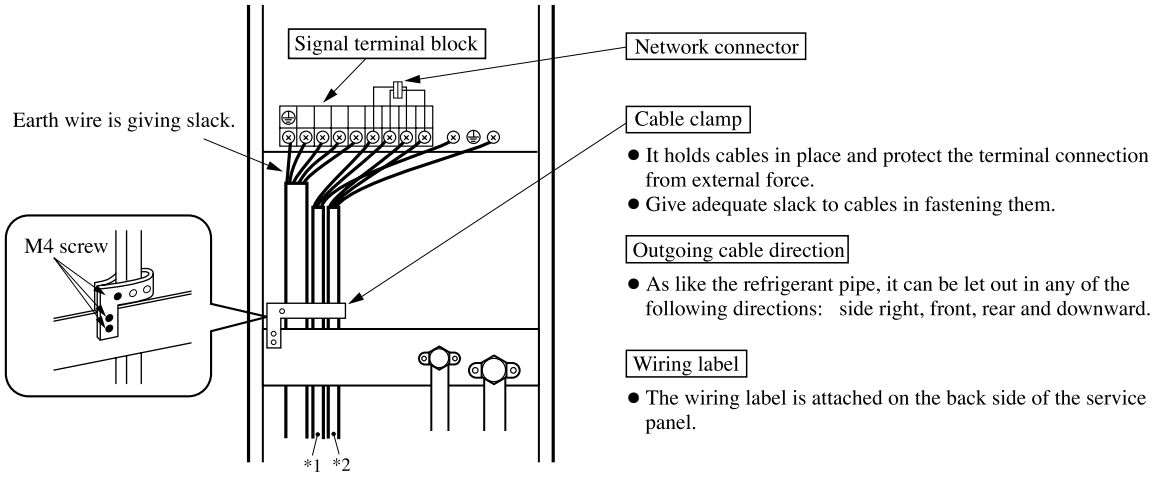

*1 Signal line between the indoor unit and the outdoor unit.
*2 Signal line between the outdoor units.

Attention

● For cabling of the power source terminal block, use crimp terminals of the figure shown below.

FDC112 ~ 155KXEN6 (Single-phase)

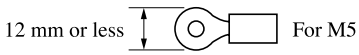

FDC112 ~ 155KXES6 (Three-phase)

● For cabling of the signal line terminal block, use crimp terminals of the figure shown below.

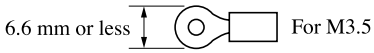

Remote controller wiring specifications

(1) For the remote controller the standard wire is 0.3mm² × 2 cores. The max. length is up to 600m. When the wire is more than 100m long, use the wire shown in the table.

Length (m)	Wire size
100 to 200	0.5mm² × 2 cores
to 300	0.75mm² × 2 cores
to 400	1.25mm² × 2 cores
to 600	2.0mm² × 2 cores

(6) Controller settings

(i) Unit address setting

This control system controls the controllers of more than one air conditioner's outdoor unit, indoor unit and remote control unit through communication control, using the microcomputers built in the respective controllers. Address setting needs to be done for both outdoor and indoor units. Turn on power in the order of the outdoor units and then the indoor units.

Use 1 minute as the rule of thumb for an interval between them.

The communication protocol can be choosen from following two types. One of them is the conventional Superlink (hereinafter previous SL) and the other is the new Superlink II (hereinafter new SL). These two communication protocols have their advantages and restrictions as summarized in a table in “6. ELECTRICAL WIRING WORK” so please choose a desirable one meeting your installation conditions such as connected indoor units and centralized controller.

When signal cables are connected into a network involving outdoor units, indoor units or centralized control equipment that do not support new SL, please select communications in the previous SL mode, even if the refrigerant system is separated from theirs.

When communication is established after setting addresses, check the communication protocol with the 7 segment display panel of the outdoor unit.

● Address setting methods

The following address setting methods can be used. The procedure for automatic address setting is different from the conventional one.

Please use the automatic address setting function after reading this manual carefully.

Communication protocol		new SL		previous SL	
Address setting method		Automatic	Manual	Automatic	Manual
When only one refrigerant system is involved (signal lines do not link with plural refrigerant systems)		OK	OK	OK	OK
When plural refrigerant systems are linked with signal lines (e.g., to implement centralized controller)	Case 1 When signal lines linking plural refrigerant systems are provided between outdoor units.	OK*1	OK	×	OK
	Case 2 When signal lines linking plural refrigerant systems are provided between indoor units.	×*2	OK	×	OK

*1 Do not connect the signal line between outdoor units to A1 and B1. This may interrupt proper address setting. (Case 3)
Do not connect the signal line between indoor unit and outdoor unit to A2 and B2. This may interrupt proper address setting. (Case 4)

*2 In Case 2, automatic address setting is not available. Set addresses manually.

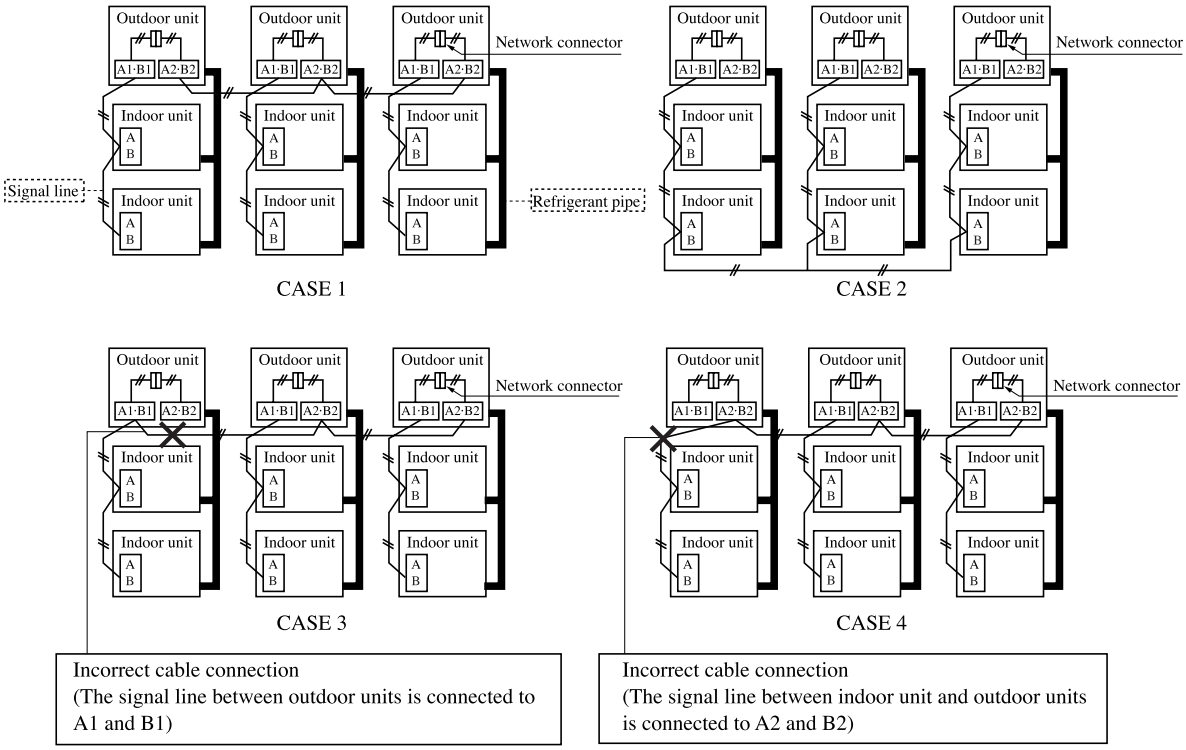

● Address No. setting

Set SW1 through 4 and SW5-2 provided on the PCB and SW1 & 2 provided on the outdoor unit PCB as shown in the drawings below.

Indoor PCB	SW1, 2 (blue)	For setting indoor No. (The ten's and one's)
	SW3, 4 (green)	For setting outdoor No. (The ten's and one's)
	SW5-2	Indoor No. switch (The hundred's Place) [OFF : 0, ON : 1]
Outdoor PCB	SW1, 2 (green)	For setting outdoor No. (The ten's and one's)

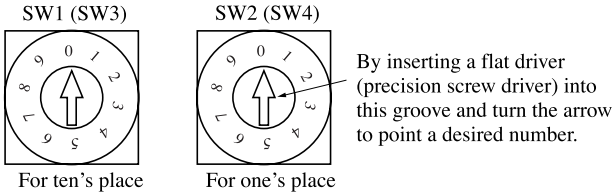

● **Summary of address setting methods (figures in [ ] should be used with previous SL)**

	Units supporting new SL			Units NOT supporting new SL		
	Indoor unit address setting		Outdoor unit address setting	Indoor unit address setting		Outdoor unit address setting
	Indoor No. switch	Outdoor No. switch	Outdoor No. switch	Indoor No. switch	Outdoor No. switch	Outdoor No. switch
Manual address setting (previous SL/new SL)	000 ~ 127 [47] (*1)	00 ~ 31[47]	00 ~ 31[47]	00 ~ 47	00 ~ 47	00 ~ 47
Automatic address setting for single refrigerant system installation (previous SL/new SL)	000	49	49	49	49	49
Automatic address setting for multiple refrigerant systems installation (with new SL only)	000	49	00 ~ 31	×	×	×

(*1) Do not set numbers other than those shown in the table, or an error may be generated.
Note: When units supporting new SL are added to a network using previous SL such as one involving FD○A△△KXE4 series units, choose previous SL for the communication protocol and set addresses manually.

- An outdoor unit No., which is used to identify which outdoor unit and indoor units are connected in a refrigerant system, is set on outdoor unit PCB and indoor unit PCB. Give the same outdoor unit No. to all outdoor unit and indoor units connected in same refrigerant system.
- An indoor unit No. is used to identify individual indoor units. Assign a unique number that is not assigned to any other indoor units on the network.

Unless stated otherwise, the following procedures apply, when new SL is chosen for the communication protocol.

When previous SL is chosen, use figures shown in [ ] in carrying out these procedures.

Manual address setting Generally applicable to new SL/previous SL, use figures in [ ] with previous SL.

① Outdoor unit address setting
Set as follows before you turn on power. Upon turning on power, the outdoor unit address is registered.
Set the **Outdoor Unit No. switch to a number 00 - 31 [in the case of previous SL: 00 - 47].**
Set a unique number by avoiding the numbers assigned to other outdoor units on the network.

② Indoor unit address setting
Set as follows before you turn on power. Upon turning on power, the indoor unit address is registered.
Set **the Indoor Unit No. switch to a number 000 - 127 [in the case of previous SL: 00 - 47].**
Set **the Outdoor Unit No. switch** to the outdoor unit No. of the associated outdoor unit within the range of **00 - 31 [in the case of previous SL: 00 - 47].**
Set a unique number by avoiding the numbers assigned to other indoor units on the network.

③ Turn on power in order from the outdoor unit to indoor units. Give a one-minute or longer interval for them.
* When there are some units not supporting new SL connected in the network, set SW5-5 to ON to choose the previous SL communication mode.
In the case of previous SL, the maximum number of indoor units connectable in a network is 48.

Automatic address setting Generally applicable to new SL/previous SL, use figures in [ ] with previous SL.

With new SL, you can set indoor unit addresses automatically even for an installation involving multiple refrigerant systems connected with same network, in addition to the conventional automatic address setting of a single refrigerant system installation.
However, an installation must satisfy some additional requirements such as for wiring methods, so please read this manual carefully before you carry out automatic address setting.

(1) In the case of a single refrigerant system installation
(Generally applicable to new SL/previous SL, use figures in [ ] with previous SL.)

① Outdoor unit address setting
Set as follows before you turn on power.
Make sure that the **Outdoor Unit No. switch** is set to **49 (factory setting)**

② Indoor unit address setting
Set as follows before you turn on power.
Make sure that the **Indoor Unit No. switch** is set to **000 [in the case of previous SL: 49] (factory setting)**
Make sure that the **Outdoor Unit No. switch** is set to **49 (factory setting)**

③ Turn on power in order from the outdoor unit to indoor units. Give a one-minute or longer interval for them. Unlike the procedure set out in (2) below, you need not change settings from the 7 segment display panel.

④ Make sure that the number of indoor units indicated on the 7 segment display panel agrees with the number of the indoor units that are actually connected to the refrigerant system.

(2) In the case of a multiple refrigerant systems installation
(Applicable to new SL only. In the case of previous SL, set addresses with some other method.)

(This option is available when the interconnection wiring among refrigerant systems is on the outdoor side and new SL is chosen as the communication protocol.)

Address setting procedure (perform these steps for each outdoor unit)

[STEP1] (Items set before turning on power)

① Outdoor unit address setting

Set as follows before you turn on power.

Set the **Outdoor Unit No. switch** to a number **00 - 31.** Set a unique number by avoiding the numbers assigned to other outdoor units on the network.

② Indoor unit address setting

Set as follows before you turn on power.

Make sure that the **Indoor Unit No. switch** is set to **000 (factory setting)**

Make sure that the **Outdoor Unit No. switch** is set to **49 (factory setting)**

③ Isolate the present refrigerant system from the network.

Disengage the **network connectors (white 2P)** of the outdoor units. (Turning on power without isolating each refrigerant system will result in erroneous address setting.)

[STEP2] (Power on and automatic address setting)

④ Turn on power to the outdoor unit

Turn on power in order from the outdoor unit to indoor units. Give a one-minute or longer interval for them.

⑤ Select and enter "1" in P31 on the 7 segment display panel of each outdoor unit to input "Automatic address start.

⑥ Input a starting address and the number of connected indoor units.

Input a starting address in P32 on the 7 segment display panel of each outdoor unit.

⑦ When a starting address is entered, the display indication will switch back to the "Number of Connected Indoor Units Input" screen.

Input the number of connected indoor units from the 7 segment display panel of each outdoor unit. Please input the number of connected indoor units for each outdoor unit. (You can input it from P33 on the 7 segment display panel.) When the number of connected indoor units is entered, the 7 segment display panel indication will switch to "AUX" and start flickering.

[STEP3] (Automatic address setting completion check)

⑧ Indoor unit address determination

When the indoor unit addresses are all set, the 7 segment display panel indication will switch to "AUE" and start flickering.

If an error is detected in this process, the display will show "A○○."

Check the 7 segment display panel of each outdoor unit.

Depending on the number of connected indoor units, it may take **about 30 minutes** before the indoor unit addresses are all set.

[STEP4] (Network definition setting)

⑨ Network connection

When you have confirmed an "AUE" indication on the display of each outdoor unit, **engage the network connectors** again.

⑩ Network polarity setting

After you have made sure that the network connectors are engaged in ⑧, select and enter "1" in P34 on the 7 segment display panel of **any outdoor unit (on only 1 unit)** to specify network polarity.

⑪ Network setting completion check

When the network is defined, "End" will appear on the 7 segment display panel. An "End" indication will go off, when some operation is made from the 7 segment display panel or 3 minutes after.

	STEP1	STEP2	STEP3	STEP4
Indoor unit power source	② OFF	④ ON	—	—
Outdoor unit power source	① OFF	④ ON	—	—
Indoor unit (indoor/outdoor No.SW)	② indoor000/outdoor 49 (factory setting)	—	—	—
Outdoor unit (outdoor No.SW)	① 01,02(Ex)	—	—	—
Network connectors	③ Disconnect (each outdoor unit)	—	—	⑨ Connect (each outdoor unit)
Start automatic address setting		⑤ Select "Automatic Address Start" on each outdoor unit.		
Set starting address		⑥ outdoor 01:[01](EX) outdoor 02:[04](EX)	—	—
Set the number of indoor unit		⑦ outdoor 01:[03](EX) outdoor 02:[03](EX)	—	—
Polarity setting			—	⑩ Set in P34 on the 7 segment display panel of any outdoor unit.
7 segment display		⑦ [AUX] (Blink)	⑧ "AUE"(blink), or "A○○" in error events.	⑪ [End]

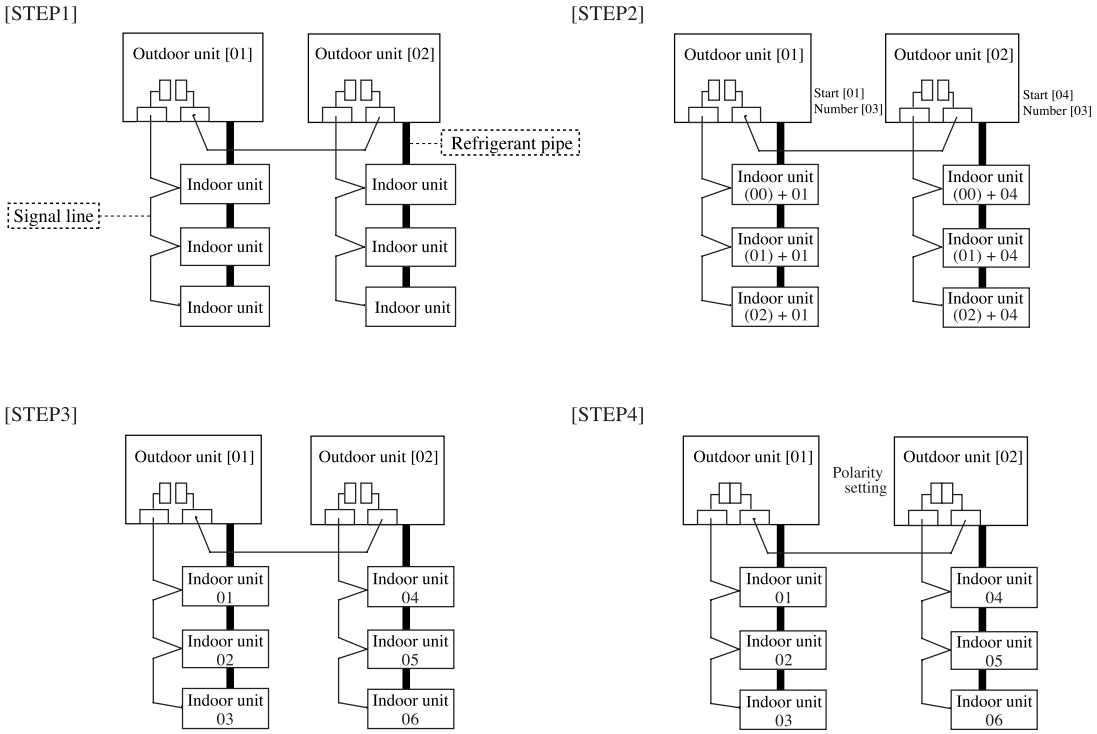

- Within a refrigerant system, indoor units are assigned addresses in the order they are recognized by the outdoor unit. Therefore, they are not necessarily assigned addresses in order from the nearest to the outdoor unit first as depicted in drawings above.
- Make sure that power has been turned on to all indoor units.
- When addresses are set, you can have the registered indoor unit address No.'s and the outdoor unit address No. displayed on the remote control unit by pressing its Inspection switch.
- Automatic address setting can be used for an installation in which prulal indoor units are controlled from one remote control unit.
- Once they are registered, addresses are stored in microcomputers, even if power is turned off.
- If you want to change an address after automatic address setting, you can change it from the remote control unit with its "Address Change" function or by means of manual setting. Set a unique address by avoiding the address assigned to other indoor unit on the network when the address is changed.
- Do not turn on power to centralized control equipment until automatic address setting is completed.
- When addresses are set, be sure to perform a test run and ensure that you can operate all indoor and outdoor units normally. Also check the addresses assigned to the indoor units.

Address change (available only with new SL)

"Address Change" is used, **when you want to change an indoor unit address assigned with the "Automatic Address Setting" function from a remote control unit.**

Accordingly, the conditions that permit an address change from a remote control unit are as follows.

	Indoor unit address setting		Outdoor unit address setting
	Indoor No.SW	Outdoor No.SW	Outdoor No.SW
Automatic address setting forsingle refrigerant system installation	000	49	49
Automatic address setting for multiple refrigerant systems installation	000	49	00 ~ 31

If "CHANGE ADD. ▼" is selected with some addresses falling outside these conditions, the following indication will appear for 3 seconds on the remote controller "INVALID OPER" .

Operating procedure

1) When single indoor unit is connected to the remote controller.

	Item	Operation	Display
1	Address change mode	① Press the AIR CON No. switch for 3 seconds or longer.	[CHANGE ADD. ▼]
		② Each time when you press the ⬍ switch, the display indication will be switched.	[CHANGE ADD. ▼] ⇔ [MASTER I/U ▲]
		③ Press the Set switch when the display shows "CHANGE ADD. ▼" and then start the address change mode, changing the display indication to the "Indoor Unit No. Setting" screen from the currently assigned address.	[I/U 001 O/U 01] (1sec) →[⬍ SET I/U ADD.] (1sec) →[I/U 001⬍] (Blink)
2	To set a new indoor unit No.	④ Set a new indoor unit No. with the ⬍ switch. A number indicated on the display will increase or decrease by 1 upon pressing the ▲ or ▼ switch respectively.	[I/U 000▲] ⇔ [I/U 001 ⬍] ⇔ [I/U 002 ⬍] ⇔ · · · ⇔ [I/U 127 ▼]
		⑤ After selecting an address, press the Set switch, and then the indoor unit address No. is defined.	[I/U 002] (2sec)
3	To set a new outdoor unit No.	⑥ After showing the defined indoor address No. for 2 seconds, the display will change to the "Outdoor Address No. Setting" screen. The currently assigned address is shown as a default value.	[I/U 002] (2sec Lighting) →[⬍ SET O/U ADD.] (1sec) →[O/U 01⬍] (Blink)
		⑦ Set a new outdoor unit No. with the ⬍ switch. A number indicated on the display will increase or decrease by 1 upon pressing the ▲ or ▼ switch respectively.	[O/U 00▲] ⇔ [O/U 01 ⬍] ⇔ [O/U 02 ⬍] ⇔ · · · ⇔ [O/U 31 ▼]
		⑧ After selecting an address, press the Set switch, and then the outdoor unit No. and the indoor unit No. are defined.	[I/U 002 O/U 02] (2sec Lighting) →[SET COMPLETE] (2sec Lighting) →Returns to normal condition.

2) When plural indoor units are connected to the remote controller.
When plural indoor units are connected, you can change their addresses without altering their cable connection.

	Item	Operation	Display
1	Address change mode	① Press the AIR CON Unit No. switch for 3 seconds or longer.	[CHANGE ADD ▼]
		② Each time when you press the ⬍ switch, the display indication will be switched.	[CHANGE ADD ▼] ⇔[MASTER I/U▲]
		③ Press the Set switch when the display shows "CHANGE ADD. ▼" The lowest indoor unit No. among the indoor units connected to the remote control unit will be shown.	[⬍SELECT I/U] (1sec) →[I/U 001 O/U 01▲] (Blink)
2	Selecting an indoor unit to be changed address	④ Pressing the ⬍ switch will change the display indication cyclically to show the unit No.'s of the indoor units connected to the remote controller and the unit No.'s of the outdoor units connected with them.	[I/U 001 O/U 01⬍] ⇔[I/U 002 O/U 01⬍] ⇔[I/U 003 O/U 01⬍] ⇔ · · · ⇔[I/U 016 O/U 01▼]
		⑤ Then the address No. of the indoor unit to be changed is determined and the screen switches to the display "⬍ SET I/U ADD."	[⬍ SET I/U ADD.] (1sec) →[I/U 001] (Blink)
3	Setting a new indoor unit No.	⑥ Set a new indoor unit No. with the ⬍ switch. A number indicated on the display will increase or decrease by 1 upon pressing the ▲ or ▼ switch respectively.	[I/U 000 ▲] ⇔[I/U 001⬍] ⇔[I/U 002⬍] ⇔ · · · ⇔[I/U 127 ▼]
		⑦ After selecting an address, press the Set switch. Then the address No.of the indoor unit is determined.	[I/U 002] (2sec)
4	Setting a new outdoor unit No.	⑧ The display will indicate the determined indoor address No. for 2 seconds and then switch to the "⬍SET O/U ADD." screen. A default value shown on the display is the current address.	[I/U 002] (2sec lighting) →[⬍ SET O/U ADD.] (1sec) →[O/U 01⬍] (Blink)
		⑨ Set a new outdoor unit No. with the ⬍ switch. A number indicated on the display will increase or decrease by 1 upon pressing the ▲ or ▼ switch respectively.	[O/U 00 ▲] ⇔[O/U 01⬍] ⇔[O/U 02⬍] ⇔ · · · ⇔[O/U 31 ▼]
		⑩ After selecting an address, press the Set switch. Then the address of the indoor unit and outdoor unit are determined.	[I/U 002 O/U 02](2sec lighting) →[⬍SELECT](1sec lighting) →[I/U SELECTION▼](lighting)
		⑪ If you want to continue to change addresses, return to step ④.	[Press the ⬍ switch](1sec) →[SET COMPLETE] (2~10seclighting)
5	Ending the session	⑫ If you want to end the session (and reflect new address settings) In Step ⑩, press the ▼ switch to select "END ▲". If you have finished changing addresses, press the Set switch while "END ▲" is shown. While new settings are being transmitted, "SET COMPLETE" will be indicated. Then the remote controller display will change to the normal state.	[END▲] →[SET COMPLETE] (2~10sec lighting) →Normal state
		⑬ If you want to end the session (without reflecting new address settings) Before you complete the present address setting session, press the "ON/OFF" switch. Then the display is change to exit from this mode and switch the display to the normal state. All address settings changed in the session will be aborted and not reflected.	[ON/OFF] →Forced termination

The ⬍ switch will continuously change the display indication to the next one in every 0.25 seconds when it is pressed for 0.75 seconds or longer.
If the Reset switch is pressed during an operation, the display indication returns to the one that was shown before the last Set switch operation.
Even if an indoor unit No. is changed in this mode, the registered indoor unit No. before address change mode is displayed when [I/U SELECTION ▼] is shown.
When "SET COMPLETE" is shown, indoor unit No.'s are registered.

NOTICE

Turn on power to centralized control equipment after the addresses are determined.
Turning on power in wrong order may result in a failure to recognize addresses.

- **7 segment display indication in automatic address setting**

Items that are to be set by the customer

Code	Contents of a display	
P30	Communication protocol	0: New SL mode 1: previos SL mode (The communication plotocol is displayed ; display only)
P31	Automatic address start	0: Automatic address standby 1: Automatic address start
P32	Input starting address	Specify a starting indoor unit address in automatic address setting.
P33	Input number of connected indoor units	Specify the number of indoor units connected in the refrigerant system in automatic address setting.
P34	Polarity difinition	0: Network polarity not defined. 1: Network polarity defined.

7 segment display indication in automatic address setting.

Code	Contents of a display
AUX	During automatic address setting. X: The number of indoor units recognized by the outdoor unit.
AUE	Indoor unit address setting is completed normally.
End	Polarity is defined. (Automatic address) Completed normally.

Address setting failure indication

Code	Contents of a display	Please check
A00	Unable to find any indoor unit that can be actually communicated with.	Are signal lines connected properly without any loose connections? Is power for indoor units all turned on?
A01	The number of the indoor units that can be actually communicated with is less than the number specified in P33 on the 7 segment display panel.	Are signal lines connected properly without any loose connections? Are the network connectors coupled properly? Input the number of connected indoor units again.
A02	The number of the indoor units that can be actually communicated with is more than the number specified in P33 on the 7 segment display panel.	Are signal lines connected properly without any loose connections? Are the network connectors coupled properly? Input the number of connected indoor units again.
A03	Starting address (P32) + Number of connected indoor units (P33) > 128	Input the starting address again. Input the number of connected indoor units again.
A04	While some units are operating in the previous SL mode on the network, the automatic address setting on multiple refrigerant systems is attempted.	Perform manual address setting. Arrange all units to operate in the new SL.

Error indication

Code	Contents of a display	Cause
E2	Duplicating indoor unit address.	Incorrect pairing of indoor-outdoor units.
E3	Incorrect pairing of indoor-outdoor units.	· An outdoor unit number that does not exist in the network is specified · No master unit exists in combination outdoor unit.
E11	Address setting for plural remote controllers.	· Indoor unit address is set from plural remote controllers.
E12	Incorrect adderess setting of indoor units.	· Automatic address setting and manual address setting are mixed.
E31	Duplicating outdoor unit address.	· Plural outdoor units are exist as same address in same network.
E46	Incorrect setting.	· Automatic address setting and manual address setting are mixed.

(ii) Control switching

Outdoor unit control settings can be changed with the dipswitch and 7segment display P○○ setting on the PCB. In changing settings in P○○ on the 7 segment display panel, you can use SW8 (increasing a number shown on the 7 segment display panel: one's place), SW9 (increasing a number shown on the 7 segment display panel: tens place) and SW7 (data write/enter) by pressing them for a prolonged time.

Contents of Control switching	Method of control setting	
	Dipswitch SW setting	P○○setting on the 7 segment display panel.
Forced cooling/heating mode *2	Switch SW3-7 to ON*1	Select "2" in P07. *1
Cooling test operation	Switch SW5-1 to ON + SW5-2 to ON	—
Heating test operation	Switch SW5-1 to ON + SW5-2 to OFF	—
Pump down	Close the outdoor unit service valves and perform the following operations in the stated order: (1) Switch SW5-2 to ON (2) Switch SW5-3 to ON (3) Switch SW5-1 to ON	—
Demand mode *2 (J13 closed: level input J13 opened: pulse input)	SW4-7:OFF, SW4-8:OFF*1 80% (factory setting) SW4-7:ON, SW4-8:OFF*1 60% SW4-7:OFF, SW4-8:ON*1 40% SW4-7:ON, SW4-8:ON*1 00%	Select "1" in P07. *1 —
Communication protocol setting	SW5-5 ON: previous SL communication, OFF: new SL communication	—
CnS1 input setting	J13: closed (factory setting) for level input, J13: opened for pulse input	—
Defrost setting	J15: closed (factory setting) for normal defrost, J15: opened for enhanced defrost	
Operation priority change	—	P01 0: earlier entry priority (factory setting) 1: later entry priority
Outdoor fan snow guard control	—	P02 0: invalid (factory setting) 1: valid
Outdoor fan snow guard control operation time setting	—	P03 30sec (factory setting)10, 30 ~ 600sec
Capacity save mode *3	—	P04 OFF:invalid (factory setting) 000, 040, 060, 080 [%]
Silent mode setting *2	—	P05 0 (factory setting) – 3: the larger the number, the stronger the effect.
External output (CnZ1) function assignment	—	P06
External input (CnS1) function assignment	—	P07
Spare	—	P8 ~ 29

*1 The switching is activated when both SW and P○○ are changed.
*2 The switching is activated when a signal is input to CnS1.
*3 Capacity restriction is effected without a signal input to CnS1 in the capacity save mode.

The external input function of CnS1 can be changed by changing the setting in P07 on the 7 segment display panel. When a signal is input to CnS1, the following functions are enabled.

	CnS1 closed	CnS1 opened
"0" : External operation input	Operation permitted	Operation prohibition
"1" : Demand input	Invalid	Valid
"2" : Cooling/heating forced input	Heating	Cooling
"3" : Silent mode input	Valid	Invalid
"4" : Spare	-	-
"5" : Outdoor fan snow guard control input	Valid	Invalid
"6" : Test run external input 1 (equivalent to SW5-1)	Test run start	Normal operation
"7" : Test run external input 2 (equivalent to SW5-2)	Cooling test run	Heating test run
"8" : Silent mode 2	Valid	Invalid
"9" : Spare	-	-

The external output function of CnZ1 can be changed by changing the setting in P06 on the 7 segment display panel.

"0" : Operation output
"1" : Error output
"2" : Compressor ON output
"3" : Fan ON output
"4 – 9" : Spare

(iii) External input and output specifications.

Contents	Specification	Connector on PCB
External input CnS1	Non-voltage contact (DC12V)	NICHIATSU B02B-XAKS-1-T
External output CnZ1	DC12V output	MOLEX 5566-02A-RE

(7) Test operation

Before beginning operation

(1) **Make sure that a measurement between the power supply terminal block and ground, when measured with a 500V megger tester, is greater than 1 MΩ.**

(2) Please check the resistance of the signaling line terminal block before power is turned on. If a resistance measurement is 100Ω or less, it suggests a possibility that power cables are connected to the signaling line terminal block. (Please check wiring refer to section 6.ELECTRICAL WIRING WORK)

(3) **Be sure to turn on the crank case heater 6 hours before operation.**

(4) **Make sure that the bottom of the compressor casing is warm.** (Outdoor temperature + 5°C or more)

(5) Be sure to fully open the service valves (liquid, gas) for the outdoor unit.
Operating the outdoor unit with the valves closed may damage the compressor.

(6) **Check that the power to all indoor units has been turned on. If not, a failure may occur.**

> **CAUTION**
>
> Please make sure that the service valves (gas, liquid) are full open before a test run. Conducing a test run with any of them in a closed position can result in a compressor failure.

Test operation

(1) Test run from an outdoor unit.

Whether CnS1 is set to ON or OFF, you can start a test run by using the SW5-1 and SW5-2 switches provided on the outdoor unit PCB.Select the test run mode first.

Please set SW5-2 to ON for a cooling test run or OFF for a heating test run. (It is set to OFF at the factory for shipment)

Turning SW5-1 from OFF to ON next will cause all connected indoor units to start.

When a test run is completed, please set SW5-1 to OFF.

Note: During a test run, an indoor unit cannot be operated from the remote control unit (to change settings). ("Under centralized control" is indicated)

(2) Method of starting a test run for a cooling operation from an outdoor unit: please operate a remote control unit according to the following steps.

(a) Start of a cooling test run

- ○ Operate the unit by pressing the [START/STOP] button.
- ○ Select the "COOLING" mode with the [MODE] button.
- ○ Press the [TEST RUN] button for 3 seconds or longer.
  The screen display will be switched from "Select with ITEM ⬍" →"Determine with [SET] " →"Cooling test run ▼."
- ○ When the [SET] button is pressed while "Cooling test run▼" is displayed, a cooling test run will start. The screen display will be switched to "COOLING TEST RUN."

(b) Termination of a cooling test run

- ○ When the [START/STOP] button or the "TEMP SET [▽] [△]" button is pressed, a cooling test run will be terminated.

Transfer

- Use the instruction manual that came with the outdoor unit to explain the operation method to the customer.
  Please ask the customer to keep this installation manual together with the user's manual of his indoor units.
- Instruct the customer that the power should not be turned off even if the unit is not to be used for a long time. This will enable operation of the air conditioner any time.
  (Since the compressor bottom is warmed by the crank case heater, seasonal compressor trouble can be prevented.)

(8) Cautions for servicing (for R410A and compatible machines)

(1) To avoid mixing of different types of oil, use separate tools for each type of refrigerant.

(2) To avoid moisture from being absorbed by the ice machine oil, the time for when the refrigerant circuit is open should be kept as short as possible.
(Within 10 min. is ideal.)

(3) For other piping work, airtighteness testing , vacuuming, and refrigerant charging, refer to section 4, REFRIGERANT PIPING.

(4) Diagnostic Inspection Procedures
For the meanings of failure diagnosis messages, please refer to the technical manual.

(5) 7-segment LED indication
Data are indicated when so chosen with the indication selector switch. For the details of indication, please refer to the technical manual.

(9) Setting function with the wired remote controller

(a) The functional setting.

• The initial function setting for typical using is performed automatically by the indoor unit connected, when remote controller and indoor unit are connected.
As long as they are used in a typical manner, there wiil be no need to change the initial settings.
If you would like to change the initial setting marked "○" , set your desired setting as for the selected item.
The procedure of functional setting is shown as the following diagram.

[Flow of function setting]

Start : Stop air-conditioner and press "○" (SET) and "" (MODE) buttons at the same time for over three seconds.
Finalize : Press "○" (SET) button.
Reset : Press "" (RESET) button.
Select : Press ▲ ▼ button.
End : Press ON/OFF button.
It is possible to finish above setting on the way,
and unfinished change of setting is unavailable.

Record and keep the setting

Note 1: The initial setting marked ※is decided by connected indoor and outdoor unit, and is automatically defined as following table.

Function No.	Item	Default	Model
Remote controller function02	AUTO RUN SET	AUTO RUN ON	"Auto-RUN" mode selectable indoor unit.
		AUTO RUN OFF	Indoor unit without "Auto-RUN" mode
Remote controller function06	FAN SPEED SW	VALID	Indoor unit with two or three step of air flow setting
		INVALID	Indoor unit with only one of air flow setting
Remote controller function07	LOUVER SW	VALID	Indoor unit with automatically swing louver
		INVALID	Indoor unit without automatically swing louver
Remote controller function13	I/U FAN	HI-MID-LO	Indoor unit with three step of air flow setting
		HI-LO	Indoor unit with two step of air flow setting
		HI-MID	
		1 FAN SPEED	Indoor unit with only one of air flow setting
Remote controller function15	MODEL TYPE	HEAT PUMP	Heat pump unit
		COOLING ONLY	Exclusive cooling unit

(i) Remote controller function

"○" : Initial settings

"※" : Automatic criterion

Stop air-conditioner and press (SET) + (MODE) buttons at the same time for over three seconds.

FUNCTION SET

FUNCTION

Function	setting		
01 GRILLE ↑↓ SET			When you use at 50Hz area
	↑↓ INVALID	○	
	50Hz ZONE ONLY		When you use at 50Hz area
	60Hz ZONE ONLY		When you use at 60Hz area
02 AUTO RUN SET			
	AUTO RUN ON	※	
	AUTO RUN OFF	※	Automatical operation is impossible
03 TEMP SW			
	VALID	○	
	INVALID		Temperature setting button is not working
04 MODE SW			
	VALID	○	
	INVALID		Mode button is not working
05 ON/OFF SW			
	VALID	○	
	INVALID		On/Off button is not working
06 FAN SPEED SW			
	VALID	※	
	INVALID	※	Fan speed button is not working
07 LOUVER SW			
	VALID	※	
	INVALID	※	Louver button is not working
08 TIMER SW			
	VALID	○	
	INVALID		Timer button is not working
09 SENSOR SET			
	SENSOR OFF	○	Remote thermistor is not working.
	SENSOR ON		Remote thermistor is working.
	SENSOR +3.0℃		Remote thermistor is working, and to be set for producing +3.0°C increase in temperature.
	SENSOR +2.0℃		Remote thermistor is working, and to be set for producing +2.0°C increase in temperature.
	SENSOR +1.0℃		Remote thermistor is working, and to be set for producing +1.0°C increase in temperature.
	SENSOR -1.0℃		Remote thermistor is working, and to be set for producing -1.0°C increase in temperature.
	SENSOR -2.0℃		Remote thermistor is working, and to be set for producing -2.0°C increase in temperature.
	SENSOR -3.0℃		Remote thermistor is working, and to be set for producing -3.0°C increase in temperature.
10 AUTO RESTART			
	INVALID	○	
	VALID		
11 VENT LINK SET			
	NO VENT	○	
	VENT LINK		In case of Single split series, by connecting ventilation device to CNT of the indoor printed circuit board (in case of VRF series, by connecting it to CND of the indoor printed circuit board), the operation of ventilation device is linked with the operation of indoor unit.
	NO VENT LINK		In case of Single split series, by connecting ventilation device to CNT of the indoor printed circuit board (in case of VRF series, by connecting it to CND of the indoor printed circuit board), you can operate /stop the ventilation device independently by (VENT) button.
12 TEMP RANGE SET			
	INDN CHANGE	○	If you change the range of set temperature, the indication of set temperature will vary following the control.
	NO INDN CHANGE		If you change the range of set temperature, the indication of set temperature will not vary following the control, and keep the set temperature.
13 I/U FAN			
	HI-MID-LO	※	Airflow of fan becomes the three speed of - - .
	HI-LO	※	Airflow of fan becomes the two speed of - .
	HI-MID		Airflow of fan becomes the two speed of - .
	1 FAN SPEED	※	Airflow of fan is fixed at one speed.
14 POSITION			If you change the remote controller function "14 POSITION", you must change the indoor function "04 POSITION" accordingly.
	4POSITION STOP	○	You can select the louver stop position in the four.
	FREE STOP		The louver can stop at any position.
15 MODEL TYPE			
	HEAT PUMP	※	
	COOLING ONLY	※	
16 EXTERNAL CONTROL SET			
	INDIVIDUAL	○	If you input signal into CNT of the indoor printed circuit board from external, the indoor unit will be operated independently according to the input from external.
	FOR ALL UNITS		If you input into CNT of the indoor printed circuit board from external, all units which connect to the same remote controller are operated according to the input from external.
17 ROOM TEMP INDICATION SET			
	INDICATION OFF	○	
	INDICATION ON		In normal working indication, indoor unit temperature is indicated instead of airflow. (Only the master remote controller can be indicated.)
18 INDICATION			
	INDICATION ON	○	
	INDICATION OFF		Heating preparation indication should not be indicated.
19 ℃/℉ SET			
	℃	○	Temperature indication is by degree C
	℉		Temperature indication is by degree F

ON/OFF button (finished)

(ii) Indoor unit function

"○" : Initial settings

"※" : Automatic criterion

Stop air-conditioner and press (SET) + (MODE) buttons at the same time for over three seconds.

FUNCTION SET ▼

I/U FUNCTION ▲

Indoor unit No. are indicated only when plural indoor units are connected.

I/U000 ▲
I/U001
I/U002
I/U003
I/U004

To set other indoor unit, press AIRCON NO. button, which allows you to go back to the indoor unit selection screen (for example: I/U 000 ▲).

Note1: Fan setting of "HIGH SPEED"

Fan tap		Indoor unit air flow setting		
FAN SPEED SET	STANDARD	HI-MID-LO	HI-LO	HI- MID
	HIGH SPEED1 , 2	UHI- HI- MID	UHI- MID	UHI- HI

Function	setting		
02 FAN SPEED SET	STANDARD	※	Initial function setting of some indoor unit is "HIGH SPEED".
	HIGH SPEED 1	※	
	HIGH SPEED 2		
03 FILTER SIGN SET	INDICATION OFF		
	TYPE 1	○	The filter sign is indicated after running for 180 hours.
	TYPE 2		The filter sign is indicated after running for 600 hours.
	TYPE 3		The filter sign is indicated after running for 1000 hours.
	TYPE 4		The filter sign is indicated after running for 1000 hours, then the indoor unit will be stopped by compulsion after 24 hours.
04 POSITION			If you change the indoor function "04 POSITION", you must change the remote controller function "14 POSITION" accordingly.
	4POSITION STOP	○	You can select the louver stop position in the four.
	FREE STOP		The louver can stop at any position.
05 EXTERNAL INPUT			
	LEVEL INPUT	○	
	PULSE INPUT		
06 OPERATION PERMISSION/PROHIBITION			
	INVALID	○	
	VALID		Permission/prohibition control of operation will be valid.
07 EMERGENCY STOP			
	INVALID	○	
	VALID		With the VRF series, it is used to stop all indoor units connected with the same outdoor unit immediately. When stop signal is inputed from remote on-off terminal "CNT-6", all indoor units are stopped immediately.
08 ※ SP OFFSET	OFFSET +3.0℃		To be reset for producing +3.0°C increase in temperature during heating.
	OFFSET +2.0℃		To be reset for producing +2.0°C increase in temperature during heating.
	OFFSET +1.0℃		To be reset for producing +1.0°C increase in temperature during heating.
	NO OFFSET	○	
09 RETURN AIR TEMP	OFFSET +2.0℃		To be reset producing +2.0°C increase in return air temperature of indoor unit.
	OFFSET +1.5℃		To be reset producing +1.5°C increase in return air temperature of indoor unit.
	OFFSET +1.0℃		To be reset producing +1.0°C increase in return air temperature of indoor unit.
	NO OFFSET	○	
	OFFSET -1.0℃		To be reset producing -1.0°C increase in return air temperature of indoor unit.
	OFFSET -1.5℃		To be reset producing -1.5°C increase in return air temperature of indoor unit.
	OFFSET -2.0℃		To be reset producing -2.0°C increase in return air temperature of indoor unit.
10 ※ FAN CONTROL			
	LOW FAN SPEED	○	When heating thermostat is OFF, fan speed is low speed.
	SET FAN SPEED		When heating thermostat is OFF, fan speed is set speed.
	INTERMITTENCE		When heating thermostat is OFF, fan speed is operated intermittently.
	FAN OFF		When heating thermostat is OFF, the fan is stopped. When the remote thermistor is working, "FAN OFF" is set automatically. Do not set "FAN OFF" when the indoor unit's thermistor is working.
11 FROST PREVENTION TEMP			Change of indoor heat exchanger temperature to start frost prevention control.
	TEMP HIGH		
	TEMP LOW	○	
12 FROST PREVENTION CONTROL			Working only with the Single split series.
	FAN CONTROL ON	○	To control frost prevention, the indoor fan tap is raised.
	FAN CONTROL OFF		
13 DRAIN PUMP LINK			
	❄💧	○	Drain pump is run during cooling and dry.
	❄💧 AND ※		Drain pump is run during cooling, dry and heating.
	❄💧 AND ※ AND ≋		Drain pump is run during cooling, dry, heating and fan.
	❄💧 AND ≋		Drain pump is run during cooling, dry and fan.
14 ❄ FAN REMAINING			
	NO REMAINING	○	After cooling is stopped or cooling thermostat is OFF, the fan does not perform extra operation.
	0.5 HOUR		After cooling is stopped or cooling thermostat is OFF, the fan perform extra operation for half an hour.
	1 HOUR		After cooling is stopped or cooling thermostat is OFF, the fan perform extra operation for an hour.
	6 HOUR		After cooling is stopped or cooling thermostat is OFF, the fan perform extra operation for six hours.
15 ※ FAN REMAINING			
	NO REMAINING	○	After heating is stopped or heating thermostat is OFF, the fan does not perform extra operation.
	0.5 HOUR		After heating is stopped or heating thermostat is OFF,the fan perform extra operation for half an hour.
	2 HOUR		After heating is stopped or heating thermostat is OFF,the fan perform extra operation for two hours.
	6 HOUR		After heating is stopped or heating thermostat is OFF, the fan perform extra operation for six hours.
16 ※ FAN INTERMITTENCE			
	NO REMAINING	○	
	20minOFF 5minON		During heating is stopped or heating thermostat is OFF, the fan perform intermittent operation for five minutes with low fan speed after twenty minutes' OFF.
	5minOFF 5minON		During heating is stopped or heating thermostat is OFF, the fan perform intermittent operation for five minutes with low fan speed after five minutes' OFF.

ON/OFF button (finished)

(b) How to set function

1) Stop air-conditioner and press (SET) (MODE) buttons at the same time for over three seconds, and the "FUNCTION SET ▼ " will be displayed.

2) Press (SET) button.

3) Make sure which do you want to set, FUNCTION ▼" (remote controller function) or "I/U FUNCTION ▲ " (indoor unit function).

4) Press ▲ or ▼ button.
Selecct " FUNCTION ▼ " (remote controller function) or "I/U FUNCTION ▲ " (indoor unit function).

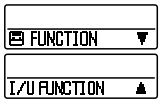

5) Press (SET) button.

6) 【On the occasion of remote controller function selection】

① "DATA LOADING" (Indication with blinking)
↓
Display is changed to "01 GRILLE ↑↓ SET".

② Press ▲ or ▼ button.
"No. and function"are indicated by turns on the remote controller function table, then you can select from them.
(For example)

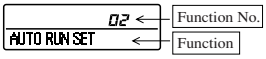

③ Press (SET) button.
The current setting of selected function is indicated.
(for example) "AUTO RUN ON" ← If "02 AUTO RUN SET" is selected

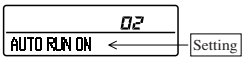

④ Press ▲ or ▼ button.
Select the setting.

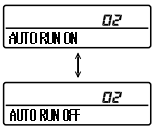

⑤ Press (SET)
"SET COMPLETE" will be indicated, and the setting will be completed.
Then after "No. and function" indication returns, Set as the same procedure if you want to set continuously ,and if to finish, go to 7.

7) Press ON/OFF button.
Setting is finished.

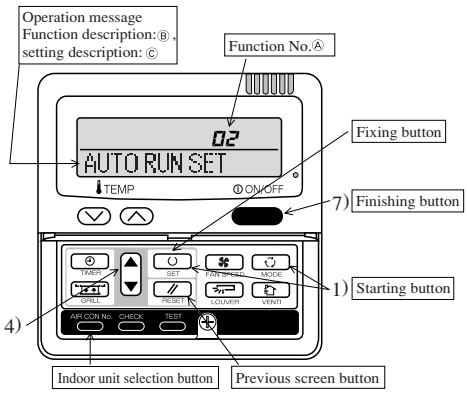

【On the occasion of indoor unit function selection】

① "DATA LOADING" (Blinking for 2 to 23 seconds to read the data)
↓
Indication is changed to "01 AUTO FILTER CLEANING".
Go to ② .

[Note]

(1) If plural indoor units are connected to a remote controller, the indication is "I/U 000" (blinking) ← The lowest number of the indoor unit connected is indicated.

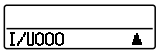

(2) Press ▲ or ▼ button.
Select the number of the indoor unit you are to set
If you select "ALL UNIT ▼ ", you can set the same setting with all unites.

(3) Press (SET) button.

② Press ▲ or ▼ button.
"No. and function" are indicated by turns on the indoor unit function table, then you can select from them.
(For example)

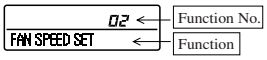

③ Press (SET) button.
The current setting of selected function is indicated.
(For example) "STANDARD" ← If "02 FAN SPEED SET" is selected.

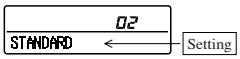

④ Press ▲ or ▼ button.
Select the setting.

⑤ Press (SET) button.
"SET COMPLETE" will be indicated, and the setting will be completed.
Then after "No. and function" indication returns, set as the same procedure if you want to set continuously , and if to finish, go to 7.

※ When plural indoor units are connected to a remote controller, press the AIRCON NO. button, which allows you to go back to the indoor unit selection screen. (example "I/U 000▲ ")

- It is possible to finish by pressing ON/OFF button on the way, but unfinished change of setting is unavailable.
- During setting, if you press (RESET) button, you return to the previous screen.
- Setting is memorized in the controller and it is saved independently of power failure.

【How to check the current setting】

When you select from "No. and funcion" and press set button by the previous operation, the "Setting" displayed first is the current setting.
(But, if you select "ALL UNIT ▼ ", the setting of the lowest number indoor unit is displayed.)

(c) The range of temperature setting.

When shipped, the range of set temperature differs depending on the operation mode as below.
Heating : 16~30°C (55~86°F)
Except heating (cooling, fan, dry, automatic) : 18~30°C (62~86°F)

1) Upper limit and lower limit of set temperature can be changed with remote controller.

Upper limit setting: valid during heating operation. Possible to set in the range of 20 to 30°C (68 to 86°F).
Lower limit setting: valid except heating (automatic, cooling, fan, dry) Possible to set in the range of 18 to 26°C (62 to 79°F).
When you set upper and lower limit by this function, control as below.

a) When ⑫ TEMP RANGE SET, remote controller function of function setting mode is "INDN CHANGE" (factory setting),
[If upper limit value is set]
During heating, you cannot set the value exceeding the upper limit.
[If lower limit value is set]
During operation mode except heating, you cannot set the value below the lower limit.

b) When ⑫ TEMP RANGE SET, remote controller function of function setting mode is "NO INDN CHANGE"
[If upper limit value is set]
During heating, even if the value exceeding the upper limit is set, upper limit value will be sent to the indoor unit.
But, the indication is the same as the temperature set.
[If lower limit value is set]
During except heating, even if the value lower than the lower limit is set, lower limit value will be sent to the indoor unit.
But, the indication is the same as the temperature set.

2) How to set upper and lower limit value

a) Stop the air-conditioner, and press [○] , (SET) and [⟲] , (MODE) button at the same time for over three seconds .
The indication changes to "FUNCTION SET ".
b) Press [▼] button once, and change to the "TEMP RANGE ▲ " indication.
c) Press [○] (SET) button, and enter the temperature range setting mode.
d) Select "UPPER LIMIT ▼ " or "LOWER LIMIT ▲ " by using [▲] [▼] button.
e) Press [○] (SET) button to fix.
f) When "UPPER LIMIT ▼ " is selected (valid during heating)
① Indication: ☝∨∧ SET UP → UPPER 30°C∨ "
② Select the upper limit value with temperature setting button [▼] [▲] . Indication example: "UPPER 26°C ∨∧ " (blinking)
③ Press [○] (SET) button to fix. Indication example: "UPPER 26°C" (Displayed for two seconds)
After the fixed upper limit value displayed for two seconds, the indication will return to "UPPER LIMIT ▼ ".

g) When "LOWER LIMIT ▲ " is selected (valid during cooling, dry, fan, automatic)

① Indication: ☝∨∧ SET UP → LOWER 18°C∧ "

② Select the upper limit value with temperature setting button ▼ ▲ . Indication example: "LOWER 24°C ∨∧ " (blinking)

③ Press ○ (SET) button to fix. Indication example: "LOWER 24°C" (Displayed for two seconds)
After the fixed upper limit value displayed for two seconds, the indication will return to "LOWER LIMIT ▼ ".

h) Press ON/OFF button.

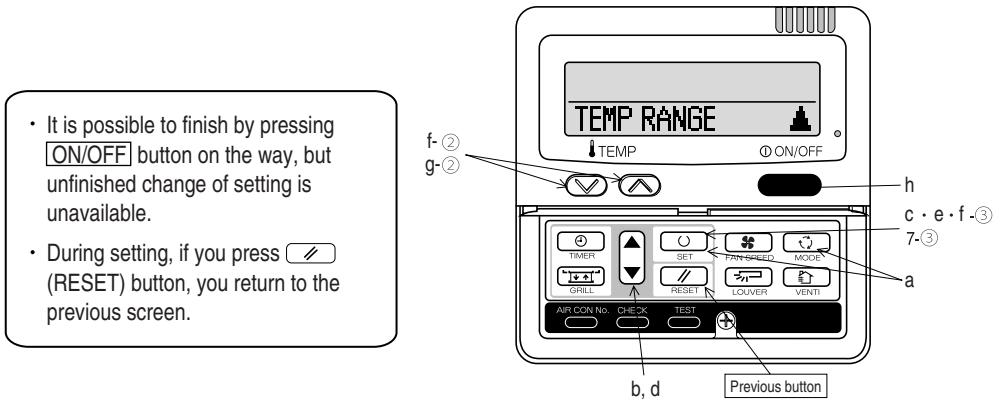

(d) Trail operation of drain pump

Drain pump operation from remote control unit is possible. Operate a remote control unit by following the steps described below.

1) To start a forced drain pump operation.

① Press the TEST button for three seconds or longer.
The display will change " TEST RUN ▼ "

② Press the ▼ button once and cause " DRAIN PUMP ⇕ " to be displayed.

③ When the ○ (SET) button is pressed, a drain pump operation will start.
Display: "☝ TO STOP "

2) To cancel a drain pump operation.

① If either ○ (SET) or ON/OFF button is pressed, a forced drain pump operation will stop. The air conditioning system will become OFF.

○ IIf two (2) remote controllers are connected to one (1) inside unit, only the master controller is available for trial operation and confirmation of operation data. (The slave remote controller is not available.)

(e) How to set the airflow direction (Only FDT, FDTC, FDE)

(i) FDT, FDTC series

It is possible to change the movable range of the louver on the air outlet from the wired remote controller. Once the top and bottom position is set, the louver will swing within the range between the top and the bottom when swing operation is chosen. It is also possible to apply different setting to each louver.

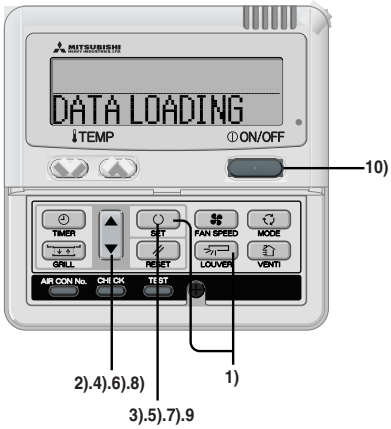

1) Stop the air conditioner and press SET button and LOUVER button simultaneously for three seconds or more.

The following is displayed if the number of the indoor units connected to the remote controller is one. Go to step 4.

"DATA LOADING "
↓
"No.1 "

The following is displayed if the number of the indoor units connected to the remote controller are more then one.

"SELECT I/U "
↓
"I/U000 "

2) Press ▲ or ▼ button. (selection of indoor unit)

Select the indoor unit of which the louver is set.

[EXAMPLE]
"I/U000 "⇔"I/U001 "⇔"I/U002 "⇔
"I/U003 "

3) Press SET button. (determination of indoor unit)

Selected indoor unit is fixed.

[EXAMPLE]
"I/U001 " (displayed for two seconds)
↓
"DATA LOADING "
↓
"No.1 "

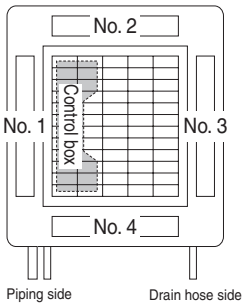

Louver No.

NOTICE

- For FDT type, in case the louver No to be set is uncertain, set any louver temporarily. The louver will swing once when the setting is completed and it is possible to confirm the louver No and the position.
  After that, choose the correct louver No and set the top and bottom position.
- For FDTC series, set louver No1 other settings selected have no effect.

4) Press ▲ or ▼ button. (selection of louver No.)

Select the louver No. to be set according to the right figure.

[EXAMPLE]
"No.1 "⇔"No.2 "⇔"No.3 "⇔
"No.4 "

- For FDTC series, set louver No1 other settings selected have no effect.

5) Press SET button. (Determination of louver No.)

The louver No. to be set is confirmed and the display shows the upper limit of the movable range.

[EXAMPLE] If No.1 louver is selected,
"No.1 UPPER2 " ←current upper limit position

6) Press ▲ or ▼ button. (selection of upper limit position)

Select the upper limit of louver movable range.
"position 1" is the most horizontal, and "position 6" is the most downward.
"position --" is to return to the factory setting. If you need to change the setting to the default setting, use "position --".

"No.1 UPPER1 " (the most horizotal)
⇔ "No.1 UPPER2 "
⇔ "No.1 UPPER3 "
⇔ "No.1 UPPER4 "
⇔ "No.1 UPPER5 "
⇔ "No.1 UPPER6 " (the most downwards)
⇔ "No.1 UPPER-- " (return to the default setting)

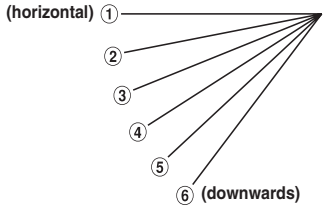

the position of the louver

7) Press ○ SET button. (Fixing of the upperlimit position)

The upper limit position is fixed and the setting position is displayed for two seconds.Then proceed to lower limit position selection display.

[EXAMPLE]

No.1 UPPER2 (displayed for two seconds)
↓
No.1 LOWER5 ⇕ (shows current setting)

8) Press ▲ or ▼ button. (Selection of lower limitposition)

Select the lower limit position of louver.
"position 1" is the most horizontal, and "position 6 " is the most downwards.
"position --" is to return to the factory setting. If you need to change the setting to the default setting, use "position --".

No.1 LOWER1 ▼ (the most horizontal)
No.1 LOWER2 ⇕
No.1 LOWER3 ⇕
No.1 LOWER4 ⇕
No.1 LOWER5 ⇕
No.1 LOWER6 ⇕ (the most downwards)
No.1 LOWER-- ▲ (return to the default setting)

9) Press ○ SET button. (Fixing of the upper limit position)

Upper limit position and lower limit position are fixed, and the set positions are displayed for two seconds, then setting is completed.

- After the setting is completed, the louver which was set moves from the original position to the lower limit position, and goes back to the original position again. (This operation is not performed if the indoor unit and/or indoor unit fan is in operation.)

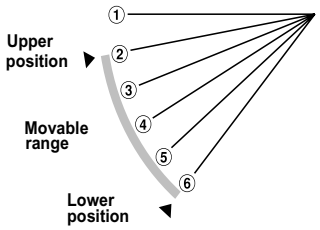

[EXAMPLE]

No.1 U2 L6 (displayed for two seconds)
SET COMPLETE
No.1 ▲

10) Press ① ON/OFF button.

Louver adjusting mode ends and returns to the original display.

Caution

If the upper limit position number and the lower limit position number are set to the same position, the louver is fixed at that position auto swing does not funtion.

ATTENTON

If you press ⊘ RESET button during settings, the display will return to previous display.If you press ⏻ON/OFF button during settings, the mode will be ended and return to original display, and the settings that have not been completed will become invalid.

When plural remote controllers are connected, louver setting operation cannot be set by slave remote controller.

If it is necessary to fix the louver position manually, follow the procedure mentioned below.

① Shut off the main power switch.

② Unplug the connector of the louver motor which you want to fix the position. Make sure to insulate unplugged connectors electrically with a vinyl tape.

③ Adjust the louver position slowly by hand so as to be within the applicable range mentioned below table.

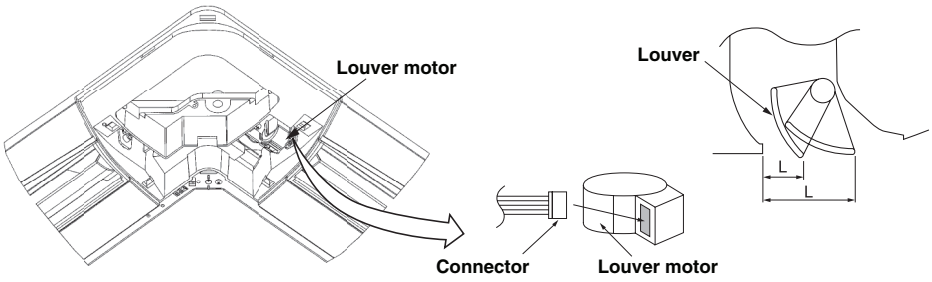

<Range of louver setting>

Vertical airflow direction	Horizontal 0°	Downwards 45°
Dimension L (mm)	43	26

※It can be set between 26~43mm freely.

Caution

- Any automatic control or operation from the remote controller will be disabled on the louver whose position is fixed in the above way.
- Do not set a louver beyond the specified range. Failure to observe this instruction may result in dripping, dew condensation, the fouling of the ceiling and the malfunctioning of the unit.

(ii) FDE series

It is possible to change the movable range of the louver on the air outlet from the wired remote controller. Once the top and bottom position is set, the louver will swing within the range between the top and the bottom when swing operation is chosen. It is also possible to apply different setting to each louver.

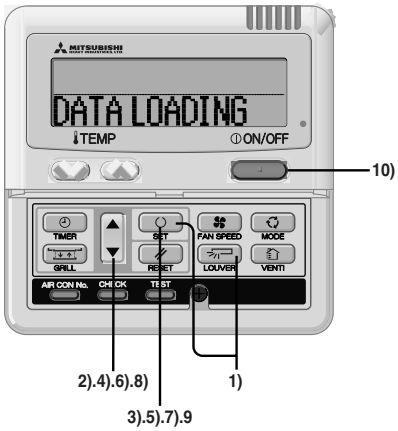

1) Stop the air conditioner and press ○ SET button and LOUVER button simultaneously for three seconds or more.

The following is displayed if the number of the indoor units connected to the remote controller is one. Go to step 4.

"DATA LOADING "
↓
"No.1 "

The following is displayed if the number of the indoor units connected to the remote controller are more than one.

"SELECT I/U "
↓
"I/U000 "

2) Press ▲ or ▼ button. (selection of indoor unit)

Select the indoor unit of which the louver is set.

[EXAMPLE]
"I/U000 "⇔"I/U001 "⇔"I/U002 "⇔
"I/U003 "

3) Press ○ SET button. (determination of indoor unit)

Selected indoor unit is fixed.

[EXAMPLE]
"I/U001 " (displayed for two seconds)
↓
"DATA LOADING "
↓
"No.1 "

4) Press ▲ or ▼ button. (selection of louver No.)

Select the louver No. to be set according to the right figure.

[EXAMPLE]
"No.1

5) Press ○ SET button. (Determination of louver No.)

The louver No. to be set is confirmed and the display shows the upper limit of the movable range.

[EXAMPLE] If No.1 louver is selected,
"No.1 UPPER2 " ←current upper limit position

6) Press ▲ or ▼ button. (selection of upper limit position)

Select the upper limit of louver movable range.
"position 1" is the most horizontal, and "position 6" is the most downward.
"position --" is to return to the factory setting. If you need to change the setting to the default setting, use "position --".

"No.1 UPPER1 " (the most horizotal)
⇔ "No.1 UPPER2 "
⇔ "No.1 UPPER3 "
⇔ "No.1 UPPER4 "
⇔ "No.1 UPPER5 "
⇔ "No.1 UPPER6 " (the most downwards)
⇔ "No.1 UPPER-- " (return to the default setting)

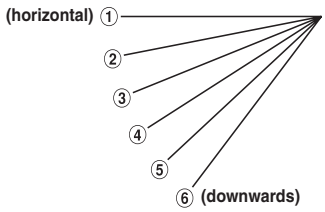

the position of the louver

7) Press ○ SET button. (Fixing of the upperlimit position)

The upper limit position is fixed and the setting position is displayed for two seconds.Then proceed to lower limit position selection display.

[EXAMPLE]

No.1 UPPER2 (displayed for two seconds)
↓
No.1 LOWER5 ⇕ (shows current setting)

8) Press ▲ or ▼ button. (Selection of lower limitposition)

Select the lower limit position of louver.
"position 1" is the most horizontal, and "position 6 " is the most downwards.
"position --" is to return to the factory setting. If you need to change the setting to the default setting, use "position --".

No.1 LOWER1 (the most horizontal)
No.1 LOWER2 ⇕
No.1 LOWER3 ⇕
No.1 LOWER4 ⇕
No.1 LOWER5 ⇕
No.1 LOWER6 ⇕ (the most downwards)
No.1 LOWER-- (return to the default setting)

9) Press ○ SET button. (Fixing of the upper limit position)

Upper limit position and lower limit position are fixed, and the set positions are displayed for two seconds, then setting is completed.

- After the setting is completed, the louver which was set moves from the original position to the lower limit position, and goes back to the original position again. (This operation is not performed if the indoor unit and/or indoor unit fan is in operation.)

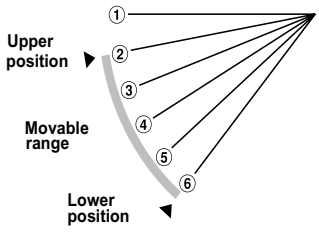

[EXAMPLE]

No.1 U2 L6 (displayed for two seconds)
SET COMPLETE
No.1

10) Press ① ON/OFF button.

Louver adjusting mode ends and returns to the original display.

Caution

If the upper limit position number and the lower limit position number are set to the same position, the louver is fixed at that position auto swing does not funtion.

ATTENTON

If you press ⊘ RESET button during settings, the display will return to previous display.If you press ①ON/OFF button during settings, the mode will be ended and return to original display, and the settings that have not been completed will become invalid.

When plural remote controllers are connected, louver setting operation cannot be set by slave remote controller.

(10) Notabilia as a unit designed for R410A

(a) Do not use any refrigerant other than R410A.
R410A will rise to pressure about 1.6 times higher than that of a conventional refrigerant.

(b) A unit designed for R410A has adopted a different size indoor unit operation valve charge port and a different size check joint provided in the unit to prevent the charging of a wrong refrigerant by mistake. The processed dimension of the flared part of a refrigerant pipe and a flare nut's parallel side measurement have also been altered to raise strength against pressure. Accordingly, you are required to arrange dedicated R410A tools listed in the table below before installing or servicing this unit.

(c) Do not use a charge cylinder. The use of a charge cylinder will cause the refrigerant composition to charge, which results in performance degradation.

(d) In charging refrigerant, always take it out from a cylinder in the liquid phase.

(e) All indoor units must be models designed exclusively for R410A. Please check connectable indoor unit models in a catalog, etc. (A wrong indoor unit, if connected into the system, will impair proper system operation)

	Dedicated R410A tools
a)	Gauge manifold
b)	Charge hose
c)	Electronic scale for refrigerant charging
d)	Torque wrench
e)	Flare tool
f)	Protrucsion control copper pipe gauge
g)	Vaccum pump adapter
h)	Gas leak detector

4.6 OUTLINE OF OPERATION CONTROL BY MICROCOMPUTER

(1) Wired remote controller (Optional parts)

The figure below shows the remote controller with the cover opened. Note that all the items that may be displayed in the liquid crystal display area are shown in the figure for the sake of explanation.

Characters displayed with dots in the liquid crystal display area are abbreviated.

Pull the cover downward to open it.

The figure below shows the remote control with the cover opened.

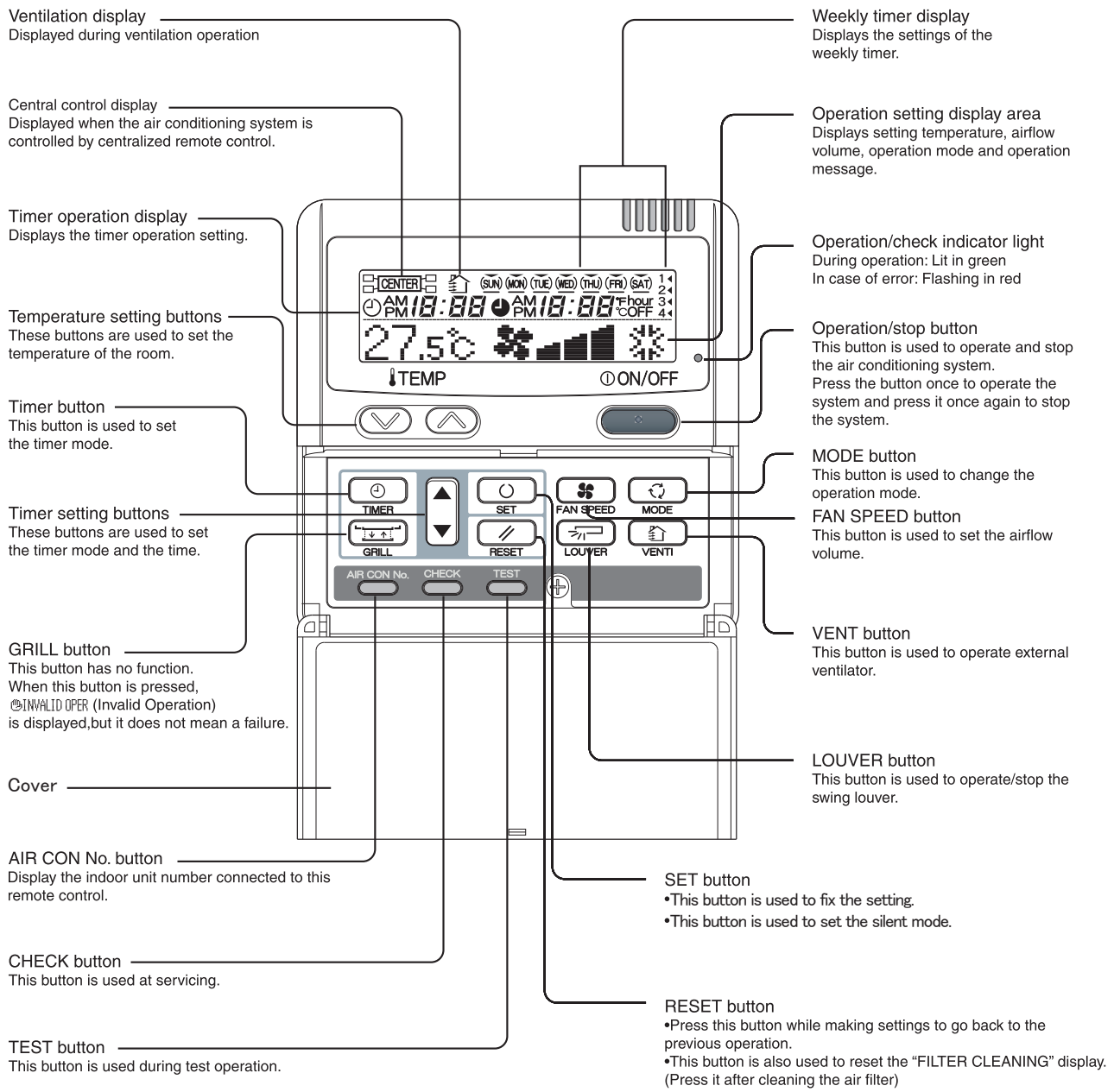

＊ All displays are described in the liguid crystal display for explanation.

Installation of remote control

DO NOT install it on the following places in order to avoid malfunction.

(1) Places exposed to direct sunlight
(2) Places near heat devices
(3) High humidity places
(4) Hot surface or cold surface enough to generate condensation
(5) Places exposed to oil mist or steam directly
(6) Uneven surface

(2) Operation control function by the indoor controller

(1) Operations of functional items during cooling/heating [Applicable model: All models]

Operation / Functional item	Cooling		Fan	Heating			Dehumidify
	Thermostat ON	Thermostat OFF		Thermostat ON	Thermostat OFF	Hot start (Defrost)	
Compressor	○	×	×	○	×	○	○/×
4-way valve	×	×	×	○	○	○(×)	×
Outdoor fan	○	×	×	○	×	○(×)	○/×
Indoor fan	○	○	○	○/×	○/×	○/×	○/×
Louver motor	○/×			○/×	○/×	○/×	○/×
Drain pump (4)	○	×(2)	×(2)	○/×(2)			Thermostat ON: ○ Thermostat OFF: ×(2)

Note (1) ○: Operation ×: Stop ○/×: Turned ON/OFF by the control other than the room temperature control.
(2) ON during the drain motor delay control
(3) Drain pump ON setting may be selected by the indoor unit function setting of the wired remote controller. Refer to page 263 for details.

(2) Dehumidifying operation

(a) When the humidity sensor is not provided (Models other than FDT Series)
Intake air temperature sensor [Thı-A (by the remote controller when the remote control sensor is enabled)] controls the indoor temperature environment simultaneously.

1) Operation is started in the cooling mode. When the difference between the intake air temperature and the setting temperature is 2°C or less, the indoor unit fan tap is brought down by one tap. That tap is retained for 3 minutes after changing the indoor fan tap.
2) If the suction air temperature exceeds the setting temperature 3°C or more during defrosting operation, the indoor fan tap is raised by one tap. That tap is retained for 3 minutes after changing the indoor fan tap.
3) If the thermostat OFF is established during the above control, the indoor fan tap at the thermostat ON is retained so far as the thermostat is turned OFF.
4) After stopping the cooling operation, the indoor unit continues to run at Lo for 15 seconds.

(b) When the humidity sensor is provided (FDT Series only) [Optional]

1) Operation starts in the cooling mode, and the target relative humidity is determined based on the setting temperature. If the humidity detected by the humidity sensor becomes lower than the target relative humidity, the indoor unit fan tap is retained.
2) Anything other than 1) above is same as the item (a) above.

(3) Timer operation [Applicable model: All models]

(a) Timer
Set the duration of time from the present to the time to turn off the air-conditioner.
It can be selected from 10 steps in the range from “OFF 1 hour later” to “OFF 10 hours later”. After the clock timer setting, the remaining time is displayed with progress of time in the unit of hour.

(b) OFF timer
Time to turn OFF the air-conditioner can be set in the unit of 10 minutes.

(c) ON timer
Time to turn ON the air-conditioner can be set. Indoor temperature can be set simultaneously.

(d) Weekly timer
Timer operation (ON timer, OFF timer) can be set up to 4 times a day for each weekday.

(e) Timer operations which can be set in combination

	Timer	OFF timer	ON timer	Weekly timer
Timer		×	○	×
OFF timer	×		○	×
ON timer	○	○		×
Weekly timer	×	×	×	

Note (1) ○: Allowed ×: Not

(4) Remote controller display during the operation stop

(a) "Centralized control ON" is displayed always on the LCD under the "Center/Remote" and "Center" modes during the operation stop (Power ON). This is not displayed under the "Remote" mode.

(b) If this display is not shown under the "Center/Remote" mode, check if the indoor unit power switch is turned on or not.

(5) Hot start (Prevention of cold draft during heating) [Applicable model: All models of the heat pump unit]

At the startup of heating operation, at resetting the thermostat, during defrosting operation and at returning to heating, the indoor fan is controlled by the indoor heat exchanger temperature (detected with Thı-R) to prevent the cold draft.

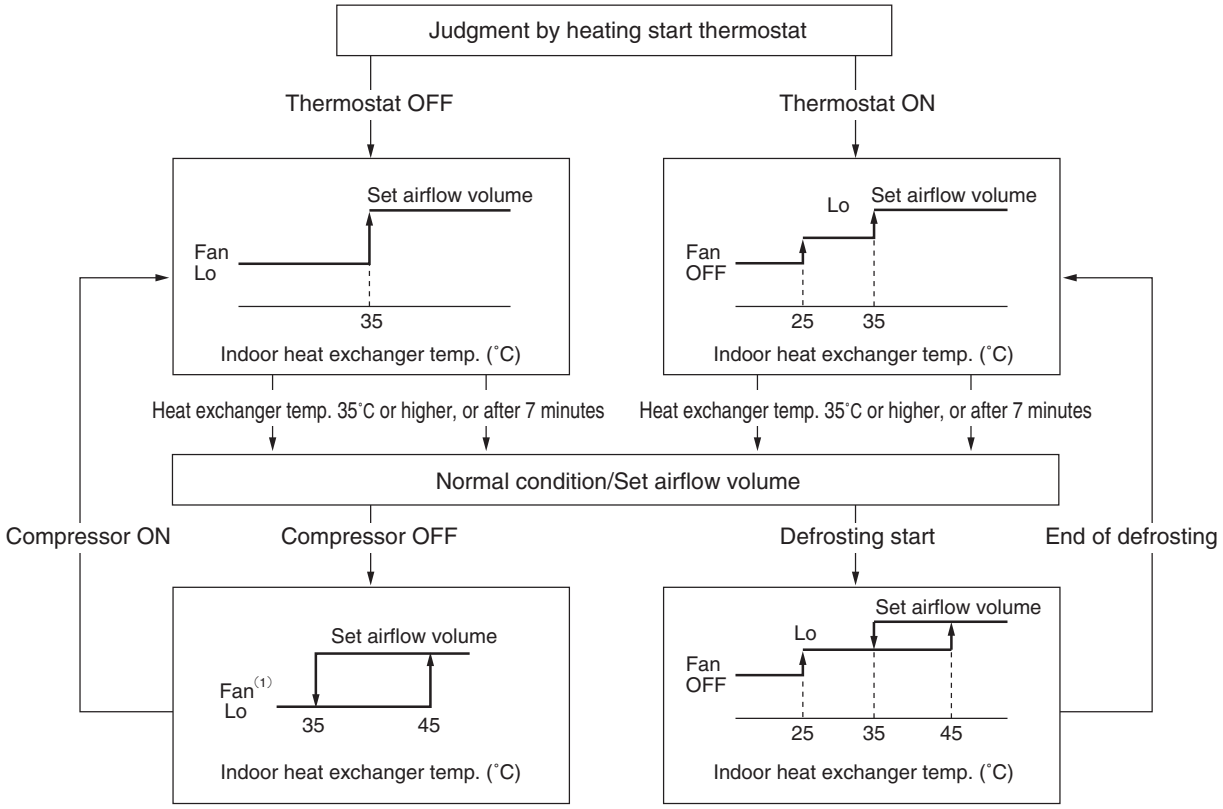

Note (1) Heating preparation is displayed during the hot start (when the compressor is operating and the indoor fan does not provide the set airflow volume).

(6) Hot keep [Applicable model: All models of the heat pump unit]

Hot keep control is performed at the start of the defrost control.

(a) Control

1) When the indoor heat exchanger temperature (detected with Thı-R1 or R2) drops to 35°C or lower, indoor fan is changed to the lower tap at each setting.

2) During the hot keep operation, the louver horizontal control signal is transmitted.

(b) Ending condition

When the indoor fan is at the lower tap at each setting, it returns to the set airflow volume as the indoor heat exchanger temperature rises to 45°C or higher.

(7) Fan control during the heating thermostat OFF [Applicable model: All models of the heat pump unit]

When the heating thermostat is turned OFF, the setting of the fan control is selectable with using the indoor function of wired remote controller [Heating fan control].

(a) Low speed (Factory default)

If the indoor heat exchanger temperature drops 35°C or lower with the heating thermostat OFF, the indoor fan operate at the lower speed tap at each setting.

(b) Set airflow volume

Even if the indoor heat exchanger temperature drops 35°C or lower with the heating thermostat OFF, the indoor fan continues to run at the set airflow volume.

(c) Intermittent operation

If the indoor heat exchanger temperature drops 35°C or lower with the heating thermostat OFF, the indoor fan operates at the lower speed tap at each setting and, when the indoor heater exchanger temperature drops 25°C or lower, the indoor fan stops for 5 minutes. Then the fan runs at the slow speed tap for 2 minutes, and the judgment is made by the thermostat.

(d) Stop

If the indoor heat exchanger temperature drops 35°C or lower with the heating thermostat OFF, the indoor fan is turned OFF. The same applies also when the remote controller sensor is effective.

(8) Filter sign [Applicable model: All models]

As the operation time (when ON/OFF switch is at ON) accumulates to 180 hours (1), "Filter cleaning" is displayed on the remote controller. (This is also displayed when the unit is in trouble and under the centralized control, regardless of ON/OFF)

Note (1) Time setting for the filter sign can be made as shown below using the indoor function of wired remote controller "Filter sign setting". (It is set at 1 at the shipping from factory.)

Filter Sign Setting	Function
Setting 1	Setting time: 180 hrs (Factory default)
Setting 2	Setting time: 600 hrs
Setting 3	Setting time: 1,000 hrs
Setting 4	Setting time: 1,000 hrs (Unit stop) (2)

(2) After the setting time has elapsed, the "Filter cleaning" is displayed and, after operating for 24 hours further (counted also during the stop), the unit stops.

(9) Auto swing control [Applicable model: FDT, FDTW (models equipped of the panel of auto swing), FDTS and FDE(N)]

(a) Louver control

(i) Press the [Louver] button to operate the swing louver when the air conditioner is operating.
"Auto wind direction" is displayed for 3 seconds and then the swing louver moves up and down continuously.

(ii) To fix the swing louver at a position, press one time the [Louver] button while the swing louver is moving so that four stop positions are displayed one after another per second.
When a desired stop position is displayed, press the [Louver] button again. The display stops, changes to show the "Louver stop" for 5 seconds and then the swing louver stops.

(iii) Louver operation at the power on
The louver swings one time automatically (without operating the remote controller) at the power on.
This allows inputting the louver motor (LM) position, which is necessary for the microcomputer to recognize the louver position.

Note (1) If you press the Louver button, the swing motion is displayed on the louver position LCD for 10 second. The display changes to the "Auto wind direction" display 3 seconds later.

(b) Automatic louver level setting during heating
While hot start operation and heating thermostat OFF operation, the louver keeps the level position (In order to prevent the cold draft) whether the auto swing switch is operated or not (auto swing or louver stop), The louver position display LCD continues to show the display which has been shown before entering this control.

(c) Louver-free stop control
When the louver-free stop has been selected with the indoor function of wired remote controller "Louver control setting", the louver motor stops when it receives the stop signal from the remote controller. If the auto swing signal is received from the remote controller, the auto swing will start from the position where it was before the stop.

Note (1) When the indoor function of wired remote controller "Louver control setting" has been switched, switch also the remote control function "Louver control setting" in the same way.

(10) Compressor inching prevention control [Applicable model: All models]

(a) 3-minutes timer
When the compressor has been stopped by the thermostat, remote controller operation switch or anomalous condition, its restart will be inhibited for 3 minutes. However, the 3-minute timer is invalidated at the power on.

(b) 3-minutes forced operation timer

- Compressor will not stop for 3 minutes after the compressor ON. However, it stops immediately when the thermostat is turned OFF by the stop command by means of the ON/OFF switch or the change of operation mode.
- If the thermostat is turned OFF during the forced compressor operation in heating mode, the louver position (with the auto swing) is returned to the level position.

Note (1) The compressor stops when it has entered the protective control.

(11) Drain motor (DM) control [Applicable type: FDT, FDTW, FDTS and FDR]

(a) Drain motor (DM) start operation at the same time when compressor ON at cooling and dehumidifying mode and keeps operating for 5 minutes after operation stop, the anomalous stop, thermostat OFF and switching from cooling or dehumidifying operation to fan or heating operation.

	Indoor unit operation mode				
	Stop (1)	Cooling	Dehumidifying	Fan (2)	Heating
Compressor ON		Control A			
Compressor OFF	Control B				

Note (1) Including the stop from cooling, dehumidifying, fan and heating operation and the anomalous stop.
(2) Including the "Fan" operation according to the mismatch of operation modes.

(i) Control A
1) If the float switch detects any anomalous draining condition, the unit stops with the anomalous stop (displays E9) and the drain pump starts.
2) The drain motor keeps operating while the float switch is detecting the anomalous condition.

(ii) Control B
If the float switch detects any anomalous drain condition, the drain motor is turned ON for 5 minutes, and at 10 seconds after the drain motor OFF it checks the float switch. If it is normal, the unit is stopped under the normal condition or, if there is any anomalous condition, E9 is displayed and the drain motor is turned ON. (The ON condition is maintained during the drain detection.)

(b) Drain motor (DM) interlock control
(i) Start conditions
Depending on the function setting of the remote controller, the drain motor is turned ON under either one of the following conditions.
1) During heating operation (Both the thermostat ON/OFF)
2) During heating operation (Both the thermostat ON/OFF) + Fan operation
3) Fan operation

(ii) Stop conditions
The drain motor is turned OFF 5 minutes after the stop of operations 1) to 3) above.

(12) Operation check/drain pump test run operation mode

(a) If the power is turned on when the dip switch (SW7-1) on the indoor PCB is ON state, it enters the mode of operation check/drain pump test run. It is ineffective (prohibited) to change the switch after turning power on.

(b) When the communication with the remote controller has been established within 60 seconds after turning power on by the dip switch (SW7-1) ON, it enters the operation check mode. Unless the remote controller communication is established, it enters the drain pump test run mode.
Note (1) To select the drain pump test run mode, disconnect the remote control connector (CNB) on the indoor PCB to shut down the remote controller communication.

(c) Operation check mode
There is no communication with the outdoor unit but it allows performing operation in respective modes by operating the remote controller.

(d) Drain pump test run mode
When the drain pump test run is established, only the drain pump operates, and during operation the protective functions by the microcomputer of indoor unit become ineffective.

(13) Indoor heat exchanger anti-frost (anti-frost control)

Thermostat OFF control

1) Thermostat is turned OFF depending on the temperature detected with the heat exchanger sensor (Thı-R1, R2) during "Cooling" and "Dehumidifying" operations.

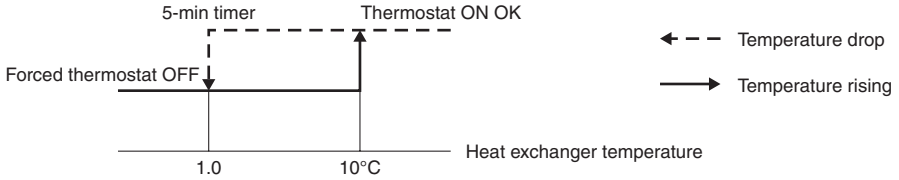

2) For 4 minutes after the thermostat ON, the forced thermostat OFF control for the anti-frost protection is not effective.
a) When temperatures detected by the heat exchanger sensors Thı-R1 and R2 are higher than the anti-frost protection temperature at 4 minutes after the thermostat ON, the detection starts from the state of thermostat ON.

3) If the temperature detected with the heat exchanger sensor Thı-R1 or R2 has stayed below the anti-frost protection temperature (-0.5°C) continuously for 5 minutes after 4 minutes of the thermostat ON operation, then the thermostat is turned OFF forcibly.
The thermostat will be turned ON if temperatures detected by Thı-Ra and R2 picked up in the thermostat ON range.

4) "Anti-frost" signal is sent to the outdoor unit.

(14) Anomalous fan motor (FDT and FDK only)

Fan motor will be stopped with displaying "E16", if it has detected the revolutions of 200 rpm or less continuously for 30 seconds at a rate of 4 times within 60 minutes, after starting the motor.

(15) High ceiling control [Applicable type: FDT, FDTW, FDTS, FDE and FDR]

When the indoor unit is installed at a high ceiling, the airflow volume mode control can be changed with the indoor function of wired remote controller "High ceiling setting".

Setting	Standard (Shipping)	High Ceiling 1	High Ceiling 2
Remote controller setting	Hi Me Lo	Hi Me Lo	Hi Me Lo
Fan speed	Hi Me Lo	UHi1 Hi Me	UHi2 Hi Me

Note (1) It is set at Standard at the shipping from factory.
(2) At the hot start, heating thermostat OFF, or other, the indoor fan operate at the slow speed tap at each setting.

(16) Hot start

Indoor fan motor control is performed at the start of heating operation.

(a) When the temperature detected with the indoor heat exchanger sensor (Thı-R1 or Thı-R2) drops 35°C or lower, it control the fan with AC motor: Lo and DC motor: ULo.

(b) When the heat exchanger sensor detects 45°C or higher with the fan running at Lo/ULo, it returns to the set airflow volume.

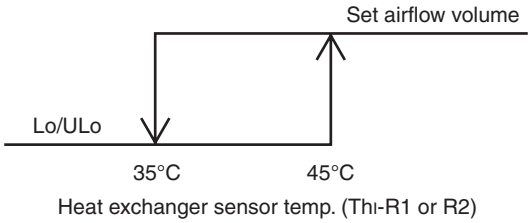

(c) On the indoor unit of which the thermostat has been turned OFF during heating operation, the fan is turned OFF if the heat exchanger sensor temperature (Thi-R1 or Thi-R2) drops 25°C or lower.

(17) Detection room temperature compensation during heating [Applicable model: All models of the heat pump unit]

With the standard specification, the compressor is turned ON/OFF based on the setting temperature of thermostat. However, when the thermostat OFF is likely to occur earlier because the unit is installed in a condition that warm air tends to accumulate near the ceiling, the setting can be changed by using the indoor function of wired remote controller "Heating room temperature compensation". Since the compressor is turned ON/OF at one of the setting temperature at +3, +2 or +1°C, the feeling of heating can be improved. However, the upper limit of setting temperature is 30°C.

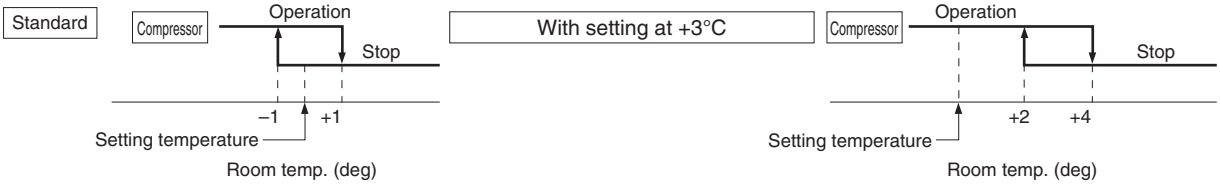

(18) Intake air temperature compensation

This is the function to compensate a difference between the detected temperature of the intake air temperature sensor and the measured temperature after installation of unit.

(a) It is adjustable in the unit of 0.5°C by using the indoor function of wired remote controller "Intake air temperature compensation".

- +1.0°C, +1.5°C and +2.0°C
- –1.0°C, –1.5°C and –2.0°C

(b) Since the compensated temperature is transmitted to the remote controller and the outdoor unit, it is controlled with the compensated temperature.

Note (1) Compensation of detection temperature is effective for the indoor unit sensor only.

(19) External control (Remote display)/Remote operation [Applicable model: All models]

Always connect the wired remote controller. Otherwise, you cannot perform the remote operation.

(a) Output for external control (remote display) (Optional remote RUN/STOP monitor kit can be utilized.)

Following output connectors (CNT) are provided on the indoor control PCB. Connect the remote RUN/STOP monitor kit and pick up respective dry contact signal.

- **Operation output**: Outputs DC12V relay drive signal during operation.
- **Heating output**: Outputs DC12V relay drive signal during heating operation.
- **Compressor ON output**: Outputs DC12V relay drive signal when the compressor is operating.
- **Error output**: When any anomalous condition occurs, it outputs DC12V relay drive signal.

(b) Remote operation input

Remote operation inputs (switch input, timer input) connectors (CnT) are provided on the indoor control PCB.
However, the remote operation by the CnT is not effective when "Center mode" is selected with the air-conditioner.

(i) At the shipping from factory [Indoor function of wired remote controller "External input selector" is set at the level input.]

- Startup at the input signal to CnT OFF → ON [Edge input] … Air-conditioner ON
- Stop at the input signal to CnT ON → OFF [Edge input] … Air-conditioner OFF

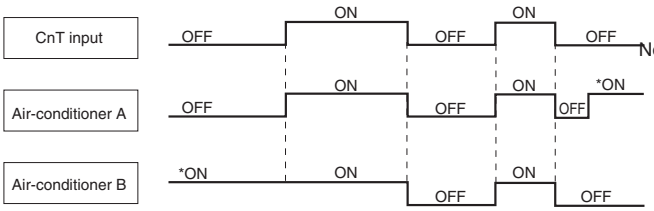

Note (1) ON marked with * means ON by a remote controller switch or other.

(ii) When the setting is changed to the pulse input at site using the indoor unit function of wired remote controller "External input selector"

It becomes effective only when the input signal to CnT is changed OFF→ON and the air-conditioner operation [ON/OFF] is inverted.

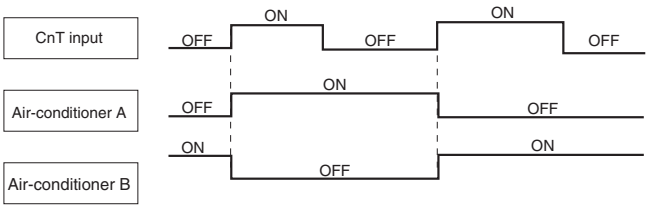

(c) Processing of emergency stop signal

This emergency stop signal is used to stop all indoor unis connected to the same outdoor unit in emergency.

1) The emergency stop control becomes effective if the emergency stop control setting is changed to "Valid" from the wired controller.
2) If the emergency stop [E-63] signal is received from outdoor unit, it is transmitted to the remote controller and makes stop.

(d) Fresh air processing operation input

1) If indoor unit controller receive fresh air processing operation signal (*1) or fresh air processing stop signal from remote controller, it output ON signal or OFF signal from CnD connector respectively.
   *1. Operation switch ON at interlock setting and ventilation switch ON at non-interlock setting.
2) Output relay is DC12V option and maximum relay load is LY2F (OMRON).
3) In case of interlock setting, if either of indoor units connected to one remote controller is in the state of anomalous stop, the fresh air processing unit connected to that indoor unit cannot be operated. Other processing units connected to the indoor units operating normally can be operate.
   In case of non-interlock setting, processing unit can start ventilation even though the connected indoor unit is in anomalous stop.
4) In case of interlock setting if indoor unit stops, processing unit also stop.
5) In case of interlock setting if indoor unit stops with anomalous stop, processing unit also stop.
6) If indoor unit is started or stopped from center console, processing unit can start or stop in case of interlock setting, but it keep stopping in case of non-interlock setting.
7) Interlock or non-interlock can be set only on the remote controller.

(20) Dip switch function

Model capacity selection with SW6 0 : OFF, 1 : ON

Model	P22	P28	P36	P45	P56	P71	P80	P90	P112	P140	P160	P224	P280
SW6-1	0	1	0	0	0	0	1	0	1	0	1	0	1
SW6-2	0	0	1	0	1	0	0	1	1	0	0	1	1
SW6-3	0	0	0	1	1	0	0	0	0	1	1	1	1
SW6-4	0	0	0	0	0	1	1	1	1	1	1	1	1

(3) Operation control function by the remote controller

(1) Switching sequence of the operation mode switches of remote controller

→ Dehumidifying → Cooling → Fan → Heating → Auto

(2) [CPU reset]

When the “CHECK” and “GRILL” buttons on the remote controller are pressed at the same time, this function is activated. This function is same as power supply reset.

(3) [Power failure compensation function]

- This function becomes effective when “POWER FAILURE COMPENSATION SET” is valid by setting the remote controller functions.
- The remote controller's status is always stored in memory, and after recovery of power, operation is resumed according to the memory contents. However the auto swing stop position and timer mode are cancelled, but the weekly timer setting is restored with the holiday setting through all weekdays.
  By resetting the clock and cancelling the holiday setting for each weekday after recovery of power, weekly timer setting becomes effective.
- Contents stored in memory for power failure compenstion are as follows.

Note (1) Item ⑥⑦and ⑧ are stored in memory regardless of whether the power failure compensation setting is valid or invalid, and silent mode setting is cancelled regardless of whether the power failure compensation setting is valid or invalid.

① Running or Stopping status just before power failure
If it had been operating under OFF timer mode or simple timer mode, memorzed status is as stopping (At the recovery of power, the timer mode is cancelled but weekly timer setting is changed to the holiday setting through all weekdays

② Operation mode

③ Fan speed mode

④ Room temperature setting

⑤ Louver auto swing/stop
However, the stop position (position 4) is cancelled and is becomes the level position (position 1).

⑥ “Remote control function items”, set with the remote controller function setting (“Indoor unit function items” are stored in the inoor unit's memory.)

⑦ Upper limit value and lower limit value set by temperature setting control.

⑧ Clock timer setting and weekly timer setting (Other timer settings are not sotred in memory).

[Parts layout on remote controller PCB]

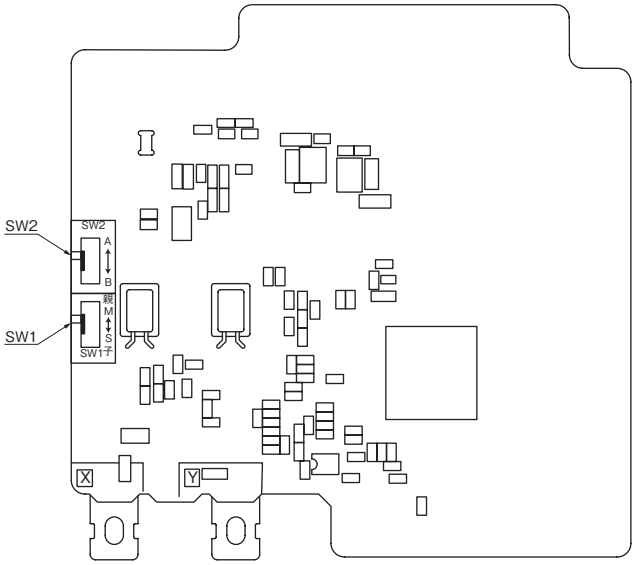

■ **Control selector switch (SW1)**

Switch		Function
SW1	M	Master remote controller
	S	Slave remote controller

Note (1) SW2 is not normally used, so do not change the selection.

(4) Operation control function by the outdoor controller

(A) Normal control

(1) Operation of major functional components under each operation mode

Operation mode / Functional components	Cooling/Dehumidifying			Heating		
	Compressor ON	Compressor OFF	All stop by remote controller	Compressor ON	Compressor OFF	All stop by remote controller
Magnetic Contactor for compressor (52C1)	ON	ON	OFF	ON	ON	OFF
Crankcase heater (CH1)	ON/OFF*1	ON/OFF*1	ON	ON/OFF*1	ON/OFF*1	ON
Compressor (CM1)	Cooling low pressure control	Stop	Stop	Heating high pressure control	Stop	Stop
Fan motor (FMo1)	Normal control	Stop	Stop	Normal control	Stop	Stop
4-way valve (20S)	OFF	OFF	OFF	ON	ON	ON→OFF*2
Electronic expansion valve for sub-cooling coil (EEVSC)	Normal control	Fully closed	Fully closed	Fully closed	Fully closed	Fully closed
Electronic expansion valve for heating (EEVH)	Fully open	Fully open	Fully open	Normal control	Fully closed	Fully closed

Note (1) Above list shows the conditions at steady state under each operation mode.
(2) *1 According to discharge superheat
(3) *2 It turns OFF after retaining ON condition for a certain minutes

(2) Compressor control

Compressor rotation speed at Cooling (Dehumidifying) and Heating operations are as follows.

Unit: rps

Item / Model	Cooling (Dehumidifying) Operation	Heating Operation
FDCP112KXE6	40 ~ 77	20 ~ 110
FDCP140KXE6	40 ~ 100	20 ~ 110
FDCP155KXE6	40 ~ 106	20 ~ 110

(3) Outdoor fan control

(a) Control contents of fan tap and fan speed

Outdoor fan tap	Fan speed	
	Cooling	Heating
	FMo1 [rpm]	FMo1 [rpm]
0th speed	0	0
1th speed	200	130
2th speed	300	300
3th speed	400	400
4th speed	500	500
5th speed	600	600
6th speed	740	740
7th speed	820	820
8th speed	870	870

(b) Fan control during cooling

During cooling and dehumidifying, fan speed is controlled in accordance with the high pressure (sensed by PSH) and the ambient air temperature (sensed by Tho-A).

(i) Initial fan speeds are as follows.

Initial outdoor fan speed at cooling

Model	Ambient air temp ≤ 5°C	5°C < Ambient air Temp. < 10°C	10°C ≤ Ambient air Temp.
All models	1th speed	3th speed	5th speed

(ii) During normal operation, the speed is changed in accordance with the high pressure value.

(c) Fan control during heating

During heating, fan speed is controlled in accordance with the low pressure (sensed by PSL).

(i) Initial fan speeds are as follows.

- Outdoor fan initial speed during heating

Model	Speed
All models	6th speed

(ii) During normal operation, the speed is changed in accordance with the low pressure value.

(4) Defrost (Defrost control)

- **Temperature condition of defrosting**

(a) Start conditions (Standard specification or cold region specification can be selected by switching the jumper wire J15.)

Defrost operation will start, when outdoor unit whose compressor is operating under heating mode has satisfied all the following conditions.

(i) When 33 minutes of cumulative compressor operation time has passed since heating operation started.

(ii) When 33 minutes of cumulative compressor operation time has passed since defrosting ended.

(iii) When 8 minutes has passed since the compressor turned ON from OFF status.

(iv) When 8minutes has passed since one outdoor fan turned ON from OFF status.

(v) After all above conditions have been met, when any of the following conditions is satisfied.

① When the outdoor heat exchanger temperature (sensed by Tho-R) and the ambient air temperature (sensed by Tho-A) dropped below the defrosting start temperature in Fig. 1 for 30 seconds continuously

② When the suction pressure saturated temperature calculated by the low pressure (sensed by PSL) and the ambient air temperature (sensed by Tho-A) dropped below the defrosting start temperature in Fig. 2 for 30 seconds continuously

Fig. 1

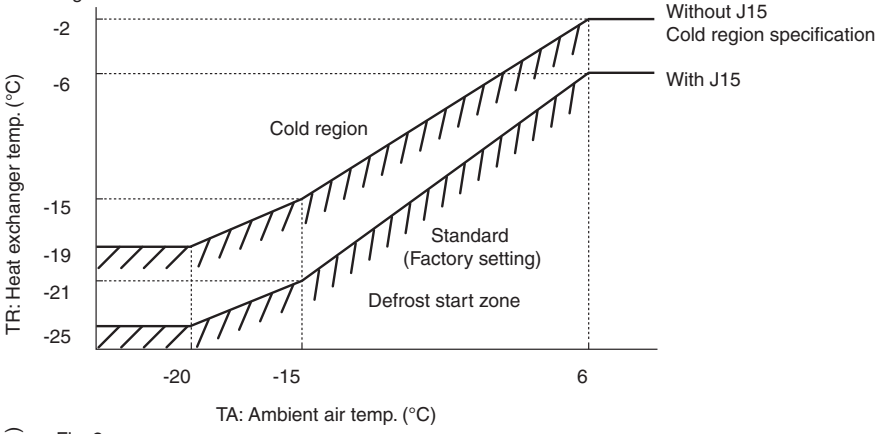

Fig. 2

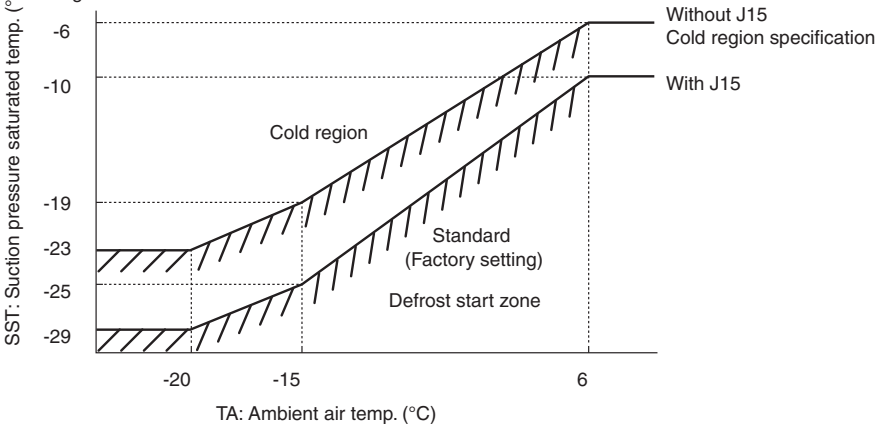

(b) End conditions

Defrosting operation stops when any of the following conditions is satisfied.

(i) When 12 minutes has passed since defrost started

(ii) When the outdoor heat exchanger temperature (sensed by Tho-R) is detected 12°C or higher continuously for 10 seconds

(iii) When it has detected the high pressure (HP) ≥ 3.0MPa

(5) Protective control

(a) Discharge pipe temperature control

If the discharge pipe temperature exceeds 105°C, compressor speed is reduced to suppress the rising of discharge pipe temperature.

(i) If the discharge pipe temperature sensor detects 115°C or higher for 2 seconds continuously, it makes compressor stopped. And if this anomaly occurs 5 times within 60 minute, it makes the unit anomalous stop (E36-1)

(ii) If the discharge overheat sensor (Td-DST) detects 5degC or lower for 10 minutes continuously, it makes compressor stopped (liquid flooding anomaly).
And if this anomaly occurs 3 times within 60 minutes, it makes the unit anomalous stop (E36-3)

(b) High pressure control

(i) Compressor rotation speed protection control

① If high pressure sensor (PSH) detects 3.70MPa or higher, it makes compressor rotaion speed decreasing

② If high pressure sensor (PSH) still detects 3.70MPa or higher 5 seconds after ① control, it makes compressor rotation speed decreasing more.

③ If high pressure sensor (PSH) detects lower than 3.70MPa, this protective control is released.

(ii) High pressure protective control
If high pressure switch (63H1) is activated or if high pressure sensor (PSH) detects 4.14MPa or higher for 10 seconds continuously, it makes compressor stopped (High pressure anomaly).
And if this anomaly occurs 5 times within 60 minute, it makes the unit anomalous stop.(E40)

(c) Low pressure control

(i) Compressor rotation speed protection control

① If low pressure sensor (PSL) detects 0.18MPa or lower for 10 seconds continuously, it makes compressor rotaion speed decreasing

② If low pressure sensor (PSL) still detects 0.18MPa or lower 30 seconds after ① control, it makes compressor rotation speed decreasing more.

③ If low pressure sensor (PSL) detects higher than 0.236MPa, this protective control is released.

(ii) Low pressure protective control
If high pressure sensor (PSL) detects 0.134MPa or lower for 30 seconds continuously, or if it detects 0.003MPa or lower for 5 seconds continuously, it makes compressor stopped (Low pressure anomaly).
And if this anomaly occurs 5 times within 60 minute, it makes the unit anomalous stop.(E49)

(d) High pressure ratio protective control

① If pressure ratio is 8.0 or higher, it makes compressor rotaion speed decreasing

② If pressure ratio is 8.0 or higher 60 seconds after ① control, it makes compressor rotation speed decreasing more.

③ If pressure ratio is 7.9 or lower, this protective control is released.

(e) Over-current protection control (Current safe)

(i) Compressor capacity control

① Compressor speed is controlled by detecting the inverter's T-phase current or secondary current.

② The control is changed at every ambient air temperature zone.

[Fig. 1]

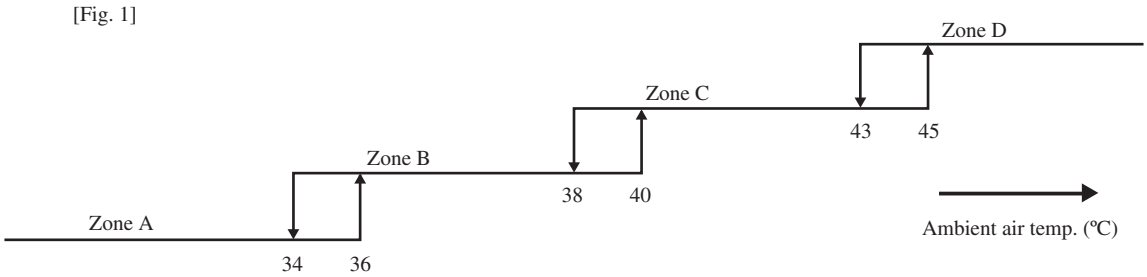

• Current safe setting value

Power supply	Current safe value [A]									
	Inverter primary (T-phase) current					Inverter secondary current				
	Cooling				Heating	Cooling				Heating
	Zone A	Zone B	Zone C	Zone D		Zone A	Zone B	Zone C	Zone D	
1-phase	21	21	19	15	23	21				
3-phase	13.5	13.5	11.5	11.5	13.5	13				

③ End condition

This control ends when the inverter's T-phase current or secondary current drops below the current safe setting value minus 1 ampere for 3 minutes continuously or below the current safe setting value in the table shown above for 6 minutes continuously.

(ii) Compressor upper limit frequency control

When it enters any zone other than the zone A (Fig. 1), the upper limit of compressor speed is changed.

Power supply	Compressor upper limit speed (rps)				
	Cooling				Heating
	Zone A	Zone B	Zone C	Zone D	
1-phase	98	92	82	54	110
3-phase	106	98	92	54	

However, the priority is given to the upper limit compressor speed by this control or the compressor speed under normal condition, whichever the lower.

(f) Power transistor temperature (PT) protective control

If the power transistor temperature exceeds 85°C, the compressor speed is controlled.

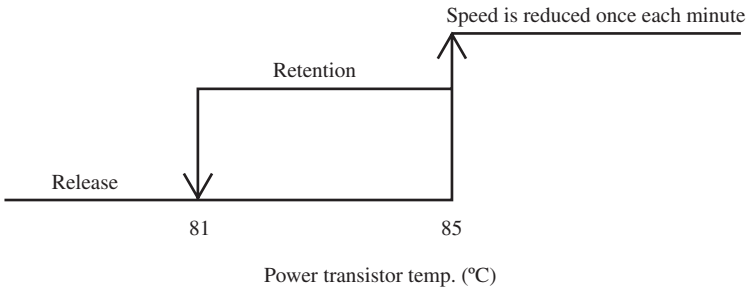

(6) Test run

(a) Start conditions

(i) Turn ON the test run switch (SW5-1). The switch is invalid if it is turned ON before the power ON.

(ii) Pump down switch (SW5-3) must be turned OFF.

(b) Contents of control

(i) Turning ON the dip switch (SW5-2) conducts cooling operation and turning OFF (SW5-2) conducts heating operation.

1) Cooling operation

Compressor operation frequency control is operated under the cooling low pressure control.

2) Heating operation

Compressor operation frequency control is operated under the heating high pressure control.

(ii) Test run start signal under corresponding operation mode is transmitted to all indoor units connected.

(c) End conditions

(i) When the test run switch (SW5-1) is turned OFF, it stops.

(ii) When it has stopped anomalously by the error control during test run, the error is displayed in the same way as normal operation and the state of anomalous stop continues even if the test run switch (SW5-1) is turned OFF.

(B) Optional controls

Outdoor unit control settings can be changed with the dipswitch and 7 segment display Pxx setting on the PCB. In changing settings in Pxx on the 7 segment display panel, you can use SW8 (increasing a number shown on the 7 segment display panel: one's place), SW9 (increasing a number shown on the 7 segment display panel: tens place) and SW7 (data write/enter) by pressing them for a prolonged time.

Contents of Control switching	Method of control setting	
	Dipswitch SW setting	POO setting on the 7 segment diaplay panel
Forced cooling/heating mode*2	Switch SW3-7 to ON*1	Select "2" in P07. *1
Cooling test operation	Switch SW5-1 to ON + SW 5-2 to ON	–
Heating test operation	Switch SW5-1 to ON + SW 5-2 to OFF	–
Pump down	Close the outdoor unit service valves and perform the following operations in the stated order: (1) Switch SW5-2 to ON (2) Switch SW5-3 to ON (3) Switch SW5-1 to ON	–
Demand mode *2 (J13 closed: level input J13 opend: pulse input)	SW4-7:OFF, SW4-8:OFF*1 80% (factory setting) SW4-7:ON, SW4-8:OFF*1 60% SW4-7:OFF, SW4-8:ON*1 40% SW4-7:ON, SW4-8:ON*1 00%	Select "1" in P07. *1
Communication protcol setting	SW5-5 ON: previous SL communication, OFF: new SL communication	–
CnS1 input setting	J13: closed (factory setting) for level input, J13: opend for pulse imput	–
Defrost setting	J15: closed (factory setting) for normal defrost, J15: opend for enhanced defrost	–
Operation priority change	–	P01 0: earlier entry priority (factory setting) 1: later entry priority
Outdoor fan snow guard control	–	P02 0: invalid (factory setting) 1: valid
Outdoor fan snow guard control operation time setting	–	P03 30sec (factory setting) 10, 30~600sec
Capacity save mode *3	–	P04 OFF: invalid (factory setting) 000, 040, 060, 080 [%]
Silent mode setting *2	–	P05 0 (factory setting) - 3: the larger the number, the stronger the effect.
External output (CnZ1) function assignment	–	P06
External input (CnS1) function assignment	–	P07
Spare	–	P8~29

*1 The switching activated when both SW and Pxx are changed.
*2 The switching activated when a signal is input to CnS1
*3 Capacity restriction is effected without a signal input to CnS1 in the capacity seve mode.

- **Functions of outdoor PCB connectors CNS1 and CNZ1**

① CNS1 connector: Following functions can be selected by selecting with [P07] on 7-segment display.

(Note) More than one function cannot operate at same time.

	CNS1 short-circuit	CNS1 open
"0": External operation input	Operation allowed	Operation prohibited
"1": Demand input	Invalid	Valid
"2": Forced cooling/heating input	Heating	Cooling
"3": Silent mode input 1	Valid	Invalid
"4": Spare	-	-
"5": Outdoor fan snow protection control input	Valid	Invalid
"6": Test run external input 1 (Equal to SW5-1)	Test run start	Normal operation
"7": Test run external input 2 (Equal to SW5-2)	Cooling test run	Heating test run
"8": Silent mode input 2	Valid	Invalid
"9": Spare	-	-

② CNZ1 connector: Following functions can be selected by selecting with [P06] on 7-segment display.

"0": Operation output
"1": Error output
"2": Compressor ON output
"3": Fan ON output
"4" ~ "9": Spare

(1) External input and demand input

(a) Operation permission and prohibition modes

(Note) With 7-segment display [P07]-[0]

1) Operation permission or operation prohibition mode is switched with the connector (CnS1) and the jumper wire (J13) on the outdoor PCB.
   J13: Switching of CnS1 input method
   J13 short-circuited: CNS1 is for the level input.
   J13 open: CnS1 is for the pulse input.
2) Operation permission/prohibition control by the external input CnS1 of outdoor unit

Input: CnS1	Switching with J13	CnS1: Switching of operation permission/ prohibition modes
Short-circuit Open	Short-circuit (Level input)	Operation prohibition mode → Operation permission mode
	Open (Pulse input)	Switching of operation permission/ operation prohibition modes (Reversal)
Short-circuit Open	Short-circuit (Level input)	Operation permission mode → Operation prohibition mode
	Open (Pulse input)	—— (NOP)

Note (1) Factory setting – J13: Short-circuit, CnS1: Short-circuit (Short-circuit pin connected)

3) Remote controller displays the operating conditions, Operation conditions are transferred to optional centralised controller.
4) When the control comand from remote controller is not accepted (Under the condition of the system all stop status by external input), “Center” is dispalyed. See Item 5) mentioned below.
5) CnS1 performs the following operations depending on the short-circuit or open of the jumper wire (J13). In case of pulse input, the pulse width is 500ms or larger.
   ① J13 – Short-circuit

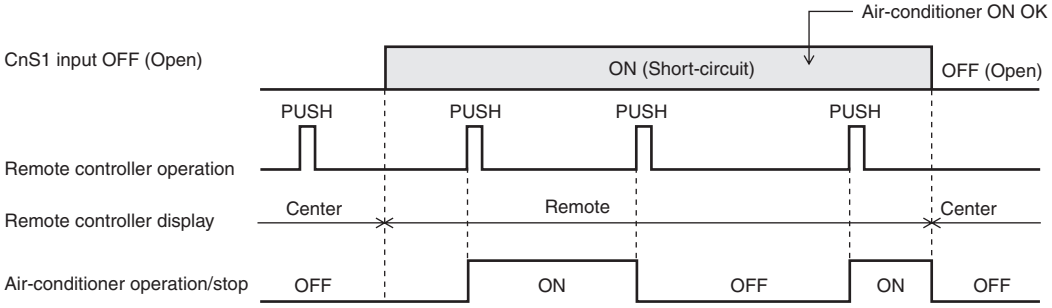

   ② J13 - Open

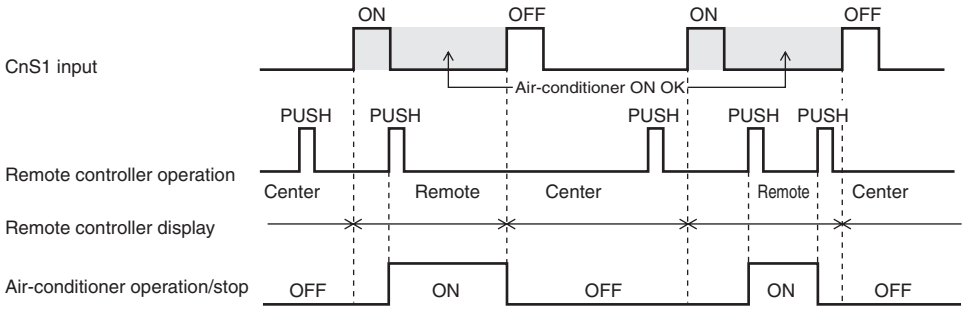

(b) Demand control

(Note) With 7-segment [P07] = [1]

1) Demand control and normal operation are switched with the connector (CnS1) and the jumper wire (J13) on the outdoor PCB.
   J13: Switching of CnS1 input method
   J13 short-circuit: CnS1 is for the level input
   J13 open: CnS1 is for the pulse input

2) Operation/ stop control by the demand input CnS1 of outdoor unit

Input: CnS1	Switching with J13	CnS1: Switching of demand control/ normal operation
Short-circuit Open	Short-circuit (Level input)	Demand control → Normal operation
	Open (Pulse input)	Switching of normal operation/ demand control (Reversal)
Short-circuit Open	Short-circuit (Level input)	Normal operation → Demand control
	Open (Pulse input)	$\overline{\text{NOP}}$

Note (1) Factory setting – J13: Short-circuit, CnS1: Short-circuit (Short-circuit pin connected)

3) Remote controller displays the operating conditions, Operation conditions are transferred to optional centralised controller.

4) Demand control

Demand ratio can be switched with the dip switches (SW4-7, 4-8) on the outdoor PCB.

SW4-7, SW4-8 demand switching: 0 – Open, 1 – Short-circuit

SW4-7	SW4-8	Compressor upper limit speed (rps)					
		FDC112KXEN/S6		FDC140KXEN/S6		FDC155KXEN/S6	
		Cooling	Heating	Cooling	Heating	Cooling	Heating
0	0	57	65	74	76	78	76
1	0	42	49	56	57	58	57
0	1	29	33	37	38	40	38
1	1	0	0	0	0	0	0

5) CnS1 performs the following operations depending on the short circuited or open of the jumper wire (J13).

In the case of pulse input, the pulse width is 500ms or larger.

① J13 – Short-circuit

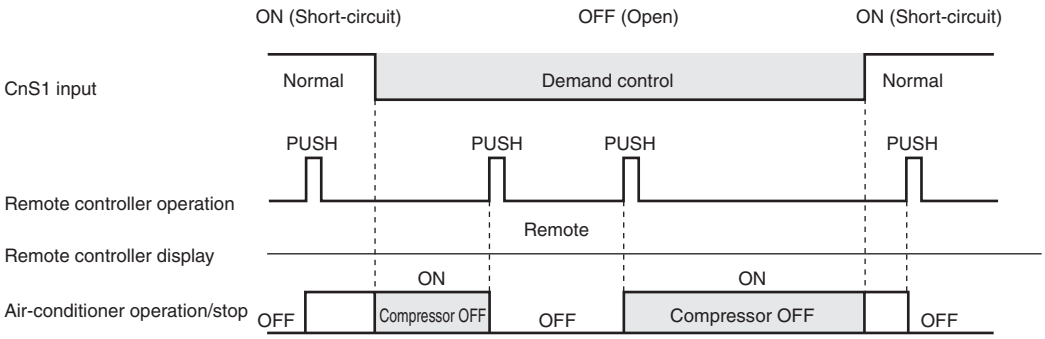

② J13 - Open

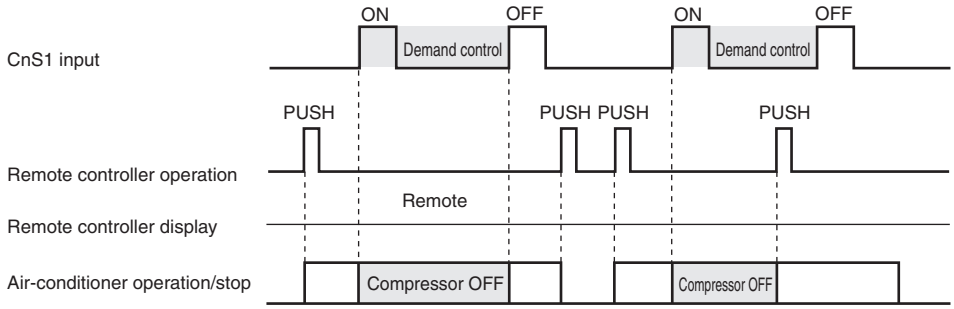

(2) Silent mode control

(Note) With 7-segment display [P07]-[3] for silent mode 1
or with 7-segment display [P07]-[8] for silent mode 2

(a) Start conditions

When all the followings are satisfied

(i) When the strat command of silent mode input from indoor unit or from external input terminal of outdoor unit has become effective.

Silent mode 1: when [07]=3 and CnS1is shorted

Silent mode 2: when [07]=8 and CnS1is shorted

(Note) Silent mode 1 and 2 can not be set at same time.

(ii) When the outdoor operation mode is “Operation”

(iii) In case of external input of silent mode 1, the ambient air temperature should be satisfied with the following conditions.

(Note) In case of external input of silent mode 2, these conditions can be disregarded.

1) Silent setting 0, 1: Effective in zone A and B

2) Silent setting 2, 3: Effective in zone B

(Note) Silent setting 0 to 3 can be swiched by [P05] of 7-segment display.

<Outdoor operation mode - Cooling>

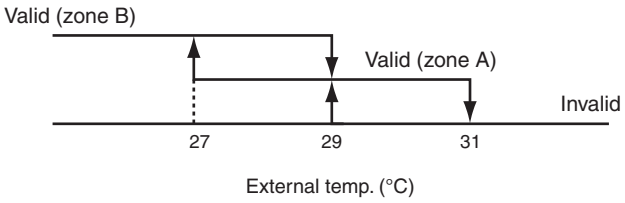

<Outdoor operation mode - Heating>

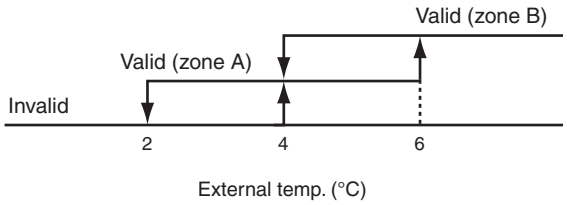

(b) Control contents

Contents of setting are changed with the silent setting of outdoor unit.

(i) Upper limit of compressor is restricted.

(ii) Upper limit speed of outdoor fan is restricted.

All models	Compressor upper limit speed (rps)	Outdoor fan upper limit speed (rpm)
Silent setting 0 (Factory default)	70	610
Silent setting 1	60	550
Silent setting 2	50	520
Silent setting 3	40	440

(c) End condition

- When the starting conditions are not established

(3) Outdoor fan snow protection control

(a) This control is enabled/disabled by entering data into 7-segment display.

(b) Outdoor fan control switching operation

[Starting conditions]

When following conditions are established for 10 minutes continuously.

(i) Snow protection control setting is valid ([P02]=1) and ambient air temperature < 3°C or external input of outdoor fan snow protection control ON. ([P07]=5 and CnS1 is shorted)

① Set the Code No. to "P02".

② "0" or "1" is displayed at the data display area.
"0": Outdoor fan control disabled (Factory setting)
"1": Outdoor fan control enabled

③ Press SW7 (Data write/delete) for 3 seconds continuously.

④ "0" or "1" blinks every 0.5 second at the data display area.

⑤ Press SW8 (one digit) to toggle between the blinling "0" and "1" display.

⑥ If SW7 is pressed for 3 minutes or longer continuously while "0 " and "1" is blinking, the blinking stops.
With this operation, the enabled/disabled setting of outdoor fan control is stored in memory of EEPROM, and henceforth the outdoor fan is controlled according to the contents of memory.

⑦ Contents of the outdoor fan control are retained even if the power is turned off and backed on again.

(c) Contents pf outdoor fan snow protection control

① If the ambient air temperature drops 3°C or lower when the unit is all stop or error stop, the outdoor fan runs at the maximum speed (4th speed) once every 10 minutes.

② The outdoor fan runs for 30 seconds.*
*Operation time outdoor fan is changeable from 10 to 600 seconds by [P03]

③ During this snow protection control, the compressor's magnetic contactor (52C1) is ON.

(d) End conditions of outdoor fan snow protection control

When folowing conditions are established.

(i) Snow protection control setting is invalid ([P02]=0) or ambient air temperature > 5°C and external input of outdoor fan snow protection control OFF (opened).

(ii) Compressor ON

(iii) During all stop by anomaly

<Ambient air temperature condition at snow protection control>

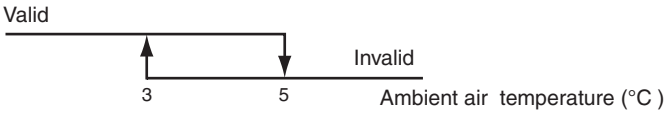

(4) External output

This function is used in order to operate the external optional devices in conjunction with relay outputs of the respective operation information from outdoor unit.

[External output function]

External output function of CnZ1 can be switched by changing of [P06] on 7-segment display as mentioned below.

0: Operation output

- When the outdoor unit operation mode is "Operation", the external output relay is turned ON.

(Note) The "Operation" includes not only compressor ON mode but also Fan mode and thermostat OFF mode under the condition of remote controller ON. But the anomalous stop is excluded.

1: Error output

- It is turned ON at anomalous stop, and turned OFF when "CHECK" and "RESET" buttons on remote controller are pressed simutaneously after recovering from the anomaly. Even if "CHECK" and "RESET" buttons are pressed before recovering from the anomaly, it is not turned OFF, but when recovering from the anomaly later, it is automatically turned OFF.

2: Compressor ON output

- It is turned ON when the compressor is ON.

3: Fan ON output

- It is turned ON when the outdoor fan speed command > 0.

(5) Energy saving mode control

This control is effective, when [P04] of 7-segment display is set 000, 040, 060, 080 (except OFF)

(a) Control contents

(i) Compressor upper limit speed is changed according to the setting ratio.

(ii) Compressor upper limit speed is obtained by multiplying the rating speed (at cooling/heating) with the setting ratio as follows.

OFF: Normal (Factory setting)

80%: 80% of rating compressor upper limit speed

60%: 60% of rating compressor upper limit speed

40%: 40% of rating compressor upper limit speed

0%: 0% of rating compressor upper limit speed (stop)

(Note) Compressor Upper limit speed (rps) on energy saving mode is shown in following table

P04	Compressor upper limit speed (rps)					
	FDC112KXEN/S6		FDC140KXEN/S6		FDC155KXEN/S6	
	Cooling	Heating	Cooling	Heating	Cooling	Heating
080	57	65	74	76	78	76
060	42	49	56	57	58	57
040	29	33	37	38	40	38
000	0	0	0	0	0	0

(iii) Except 0% of energy saving ratio, the following controls take precedence over this control.

- 4-way valve switching safeguard
- Defrosting control
- Oil return control
- Pump down operation control at removal of the unit
- Pump down control at start/stop

(6) Forced cooling/heating operation

(a) With this control, SW3-7 on the outdoor PCB is turned ON and CnS1 (equipped with short circuit pin) is shorted or opened so as to forcibly determined whether the indoor unit is operated for cooling or heating. (It is valid at [P07]=2)

(b) If any operation mode other than the forcible mode is commanded from indoor unit, the mode unmatch message is displayed on the remote controller or others and operation enters in the FAN mode.

SW3-7	CnS1	Operation
ON	Open	Cooling only
	Close	Heating only

(7) Emergency stop control

When one of indoor units receives the emergency stop signal from optional device like as refrigerant leakage detector and the information is transmitted to the outdoor unit, the outdoor unit stops operation and an emergency stop error is transmitted to all indoor units running.

Make the emergency stop effective by remote controller indoor function setting.

(a) When it receives the “Emergency stop” command from the indoor unit, it makes all stop by error.

(b) It shows the Error display “E63” and transmits the “Emergency stop” command to all indoor units.

(c) If the “Emergency stop reset” command is received from the indoor unit, the “Emergency stop reset” command is transmitted to all indoor units.

(8) Pump down operation control at removal of unit

When an outdoor unit is discarded or removed, the pump down control is performed at the outdoor unit side in order to recover the refrigerant quickly to the outdoor unit.

(a) Start conditions

This is implemented with the liquid service valve closed.

(i) Outdoor unit operation mode – Stop

(ii) Turn ON the test run cooling switch SW5-2 (cooling).

(iii) Turn ON the pump down switch SW5-3 (pump down).

(iv) Turn ON the test run switch SW5-1 when the above (i)-(iii) statuses are satisfied.

Note (1) Input before the power ON is invalid.

(b) Control contents

(i) Compressor starts under compressor start protection control and runs at target speed of pump down operation. However, when the operation start conditions have been established during the 3-minute delay control of compressor, the compressor starts after completing the 3-minute delay control.

Item / Model	Hp	Target compressor speed at pump down operation	
		Number of compressors	Compressor speed
FDC112KXEN/S6	4	1	37rps
FDC140KXEN/S6	5		45rps
FDC155KXEN/S6	6		

(ii) As the start conditions are established, both red LED and green LED on the outdoor PCB flash continuously. 7-segment display shows “PdS” (Channel 0) at the code display area.

(iii) During the pump down operation control, the protective controls (excluing low pressure protective control, anomalous low pressure control and pressure ratio protection control) and the error detection control are effective.

(iv) The sub-cooling coil expansion valve (EEVSC) closes fully during the pump down control.

(c) End conditions

If any of the following conditions is satisfied, this control ends.

(i) If a low pressure (LP) ≤ 0.01MPa is detected for 5 seconds continuously, it ends normally and initiates the followings.

① Red LED: keeps lighting

② Green LED: keeps flashing

③ 7-segment display: PdE

④ Remote controller: Stop

(ii) Anomalous all stop by the error detection control

(iii) If the cumulative compressor operation time under the pump down control totals 15 minutes (ending by time count up), it stops and initiates the following.

① Red LED: stays OFF

② Green LED: keeps flashing

③ 7-segment display: No display

④ Remote controller: Stop

(iv) When any of setting switches (SW5-1, SW5-2 and SW5-3) has been turned OFF during pump down.

(Note) Even if only the pump down switch SW5-3 is turned OFF, it does not recognized as the cooling test run mode , but stops

(C) Data output

(1) 7-segment and operation data retention

(a) 7-segment display

Operation information is displayed for checking various operation data during test run and for helping malfunction diagnosis at servising. Input data to microcomputer, contents of outdoor unit control, indoor unit registration information, or other, are mainly displayed on the 7-segment LED.

(i) Operation information display

① Displays each item at 7-segment of 3-digit × 1 on the outdoor unit PCB.

② Display is controlled with the following buttons.

SW9: Setting button for order of 10 of display code display

SW8: Setting button for order of 1 of display code display

SW7: Data erase/write button

③ 3 seconds after fixing display code, data are displayed according to the code display.

(During setting buttons, Code No. is displayed)

If SW9 or SW8 is pressed during the data display, it returns to corresponding code display.

If SW9 or SW8 is pressed during the code display, code No. is changed according the button setting.

Example) If it is required to display the data of code [C23] instead of the data of code[C00] displayed,

(i) Press SW9 or SW8 and it turns from data display to code display of [C00]

(ii) Press 2-times of SW9 and 3-times of SW8 in the state of [C00] display, the code display changes to [C23]

(iii) After 3 seconds passed, the data corresponding to [C23]is dispalyed.

④ Code [C96]is operable item. It is possible to delete the retained operation data (data of 30 minutes preceding an anomalous stop) by following resetting procedure.

<Resetting operation>

- Select code [C96]. If any anomalous data is retained, the data display [dEL] is shown 3 seconds later.
- Pressing SW7 for 3 seconds erases the memory data on RAM.
  (EEPROM data are not erased.)
- As the data are erased, the data display shows [- - -].
  When no anomalous data are retained, it displays [---] as well.
- Unless the reset operation is performed, data are retained. Therefore, if normal operation is resumed without the reset operation and an anomalous stop occurs again, no new anomalous data cannot be retained, but former anomalous data are still retained unchanged.

⑤ If you press SW8 (order of 1), the number changes 0 → 1 → 2 ... 9 → 0.

⑥ If you press SW9 (order of 10), the number jumps to the leading code of each order of 10.

Data display [Cxx] and setting value display [Pxx] are considered to be continuous.

Example: Pressing SW9 at [C07] it changes to [C10], and press SW9 again, it changes to [C20].

: Pressing SW9 at [C90], it changes to [P00], and press SW9 again, it changes to [P10].

⑦ Codes [C44] and [C45] are operable items. With the following reset operation, the cumulative compressor operation time corresponding to the code No. can be erased (reset). (Reset of operation time after replacing the compressor)

<Resetting operation>

- Select codes [C44] and [C45]. Cumulative compressor operation time to the present is displayed 3 seconds later.
- Pressing SW7 for 3 seconds erases the memory data.
  However, the cumulative compressor operation time data in the 30 minutes log data preceding an anomalous stop (if this retained log data are not deleted) are not erased by this procedure.

⑧ Data display for spare items is left in blank.

(ii) When the temperature is below -10.0°C for the display of discharge pressure saturated temperature and suction pressure saturated temperature, the fraction after decimal point is rounded up. (Because the range of 7-segment display is 3-digit.)

(iii) Precedence of display

① [Exx] > [Related to check operation ([CHJ] > [CHU])] > [PdE] > [PdS]> [oPx] > [Cxx]

② If resetting from the display of ①, it is switched to [C00].

③ If SW8 or SW9 is pressed during the display of ①, it changes to [C00].
However, unless no button input is done for 10 seconds after change to [C00], it changes to the display of ① automatically according to the precedence.

④ Display switching
Special display is the display other than [CXX].

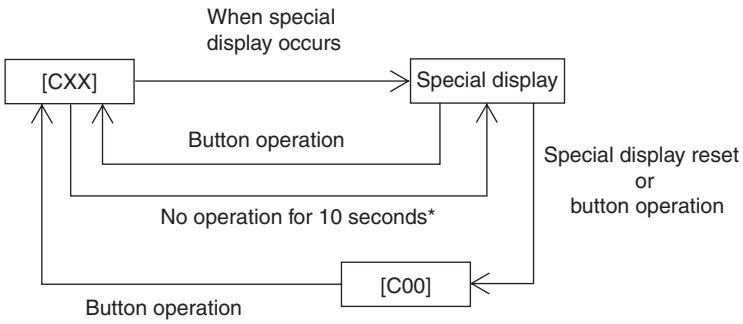

* If the special display is reset in the meanwhile, it remains as [CXX].

(b) List of 7-segment displays

Code No.	Contents of display	Data display range	Minimum unit	Remarks
Error display	[Exx]			
Caution display	[oPx]			
Special display	[PdS][PdE][CHx][CHE] [CHL][CHU][CHJ][CHO] and etc.			
Code No.	Contents of data display	Data display range	Minimum unit	Remarks
<Sensor value, actuator information>				
C00	CM1 operation frequency	0 ~ 130	1Hz	
C01	(Spare) CM2 operation frequency	0 ~ 130	1Hz	
C02	Tho-A Ambient air temperature	L,-20 ~ 43	1Hz	
C03	Tho-R1 Heat exchanger temperature 1	L,-25 ~ 73	1°C	
C04	Tho-R2 Heat exchanger temperature 2	L,-25 ~ 73	1°C	
C05	(Spare) Tho-R3 Heat exchanger temperature 3	L,-25 ~ 73	1°C	
C06	(Spare) Tho-R4 Heat exchanger temperature 4	L,-25 ~ 73	1°C	
C07	Tho-D1 Discharge pipe temperature (CM1)	L,31 ~ 136	1°C	
C08	(Spare) Tho-D2 Discharge pipe temperature (CM2)	L,31 ~ 136	1°C	
C09	(Spare)			
C10	(Spare) Tho-C1 Under-dome temperature (CM1)	L,5 ~ 90	1°C	
C11	(Spare) Tho-C2 Under-dome temperature (CM2)	L,5 ~ 90	1°C	
C12	Tho-P1 Power transistor temperature (CM1)	L,5 ~ 136	1°C	
C13	(Spare) Tho-P2 Power transistor temperature (CM2)	L,5 ~ 136	1°C	
C14	Tho-SC Sub-cooling coil temperature 1	L,18 ~ 73	1°C	
C15	Tho-H Sub-cooling coil temperature 2	L,-25 ~ 73	1°C	
C16	Tho-S Suction pipe temperature	L,-25 ~ 73	1°C	
C17	(Spare) Temperature sensor (Active filter)			
C18	CT1 (CM1) current	0 ~ 50	1A	
C19	(Spare) CT2 (CM2) current	0 ~ 50	1A	
C20	EEVH1 Heating expansion valve opening angle	0 ~ 500	1 pulse	
C21	(Spare) EEVH2 Heating expansion valve opening angle	0 ~ 500	1 pulse	
C22	EEVSC Sub-cooling coil expansion valve opening angle	0 ~ 500	1 pulse	
C23	FMo1 Actual fan speed	0 ~ 999	10min-1	
C24	(Spare) FMo2 Actual fan speed	0 ~ 999	10min-1	
C25	PSH High pressure sensor	0 ~ 4.15	0.01MPa	
C26	PSL Low pressure sensor	0 ~ 1.70	0.01MPa	
C27	(Spare)			
C28	(Spare)			
C29	(Spare)			

Code No.	Contents of data display	Data display range	Minimum unit	Remarks
C30	Pressure switch	0,1 (0: Close, 1: Open)	–	Order of 100: 63H1-1 Order of 10: (Spare) 63H1-R Order of 1: (Spare)
C31	External input	0,1 (0: Close, 1: Open)	–	Order of 100: CNS1 Order of 10: (Spare) CNS2 Order of 1: (Spare) CNG1
C32	External input	0,1 (0: Close, 1: Open)	–	Order of 100: (Spare) CNG2 Order of 10: (Spare) Order of 1: (Spare)
C33	Relay output	0,1 (0: Close, 1: Open)	–	Order of 100: 52C-1 Order of 10: 20S Order of 1: Crankcase heater 1
C34	Relay output	0,1 (0: Close, 1: Open)	–	Order of 100: (Spare) SV6 Order of 10: (Spare) SV7 Order of 1: (Spare) Cooling fan
C35	Relay output	0,1 (0: Close, 1: Open)	–	Order of 100: (Spare) SV1 Order of 10: (Spare) SV11 Order of 1: (Spare) SV12
C36	Relay output	0,1 (0: Close, 1: Open)	–	Order of 100: (Spare) Order of 10: (Spare) Order of 1: (Spare)
C37	External output	0,1 (0: Close, 1: Open)	–	Order of 100: External output (CNZ1) Order of 10: (Spare) Operation output Order of 1: (Spare) Anomalous output
C38	(Spare)	0,1 (0: Close, 1: Open)	–	Order of 100: Order of 10: Order of 1:
C39	(Spare)	0,1 (0: Close, 1: Open)	–	Order of 100: Order of 10: Order of 1:
<Outdoor unit information>				
C40	Number of connected indoor units	0 ~ 50	1	
C41	Capacity of connected indoor units	0 ~ 200		
C42	Number of indoor units with thermostat ON	0 ~ 50	1	
C43	Required Hz total	0 ~ 999	1Hz	
C44	Cumulative compressor operation time (CM1)	0 ~ 655	100h	
C45	(Spare) Cumulative compressor operation time (CM2)	0 ~ 655	100h	
C46	Discharge pressure saturated temperature	-50 ~ 70	0.1°C	Range unable to display (-10°C or under) is in the unit of 1°C.
C47	Suction pressure saturated temperature	-50 ~ 30	0.1°C	Range unable to display (-10°C or under) is in the unit of 1°C.
C48	Sub-cooling coil temperature sensor 1 saturated pressure	-0.68 ~ 4.15	0.01 MPa	0 is omitted in negative range. -0.68 → [-.68]
C49	Cooling sub-cooling	0 ~ 50	0.1deg	
C50	Heating overheat	0 ~ 50	0.1deg	
C51	Sub-cooling coil overheat	0 ~ 50	0.1deg	
C52	Discharge pipe overheat 1	0 ~ 50	0.1deg	
C53	(Spare) Under-dome overheat 1	0 ~ 50	0.1deg	
C54	Target cooling low pressure	0.00 ~ 2.00	0.01MPa	
C55	Target heating high pressure	1.60 ~ 4.15	0.01MPa	

Code No.	Contents of data display	Data display range	Minimum unit	Remarks
C56	Target Fk	0 ~ 999	1Hz	
C57	Inverter 1 operation frequency command	0 ~ 130	1Hz	
C58	(Spare) Inverter 2 operation frequency command	0 ~ 130	1Hz	
C59	FMo1 Fan Speed command	0 ~ 999	10min-1	
C60	(Spare) FMo2 Fan Speed command	0 ~ 999	10min-1	
<Control status>				
C61	Control status	0,1 (0: Close, 1: Open)	–	Order of 100: Oil return control ON
				Order of 10: Defrosting ON
				Order of 1: (Spare)
C62	Control status	0,1 (0: Close, 1: Open)	–	Order of 100: Test run control ON
				Order of 10: Demand control ON
				Order of 1: Silent mode control ON
C63	Control status	0,1 (0: Close, 1: Open)	–	Order of 100: Capacity measurement mode ON
				Order of 10: (Spare)
				Order of 1: (Spare)
C64	(Spare)	0,1 (0: Close, 1: Open)	–	Order of 100:
				Order of 10:
				Order of 1:
C65	Protection control status	0,1 (0: Close, 1: Open)	–	Order of 100: HP control by compressor speed down control ON
				Order of 10: LP control by compressor speed down control ON
				Order of 1: Td control by compressor speed down control ON
C66	Protection control status	0,1 (0: Close, 1: Open)	–	Order of 100: Compression ratio control by compressor speed down control ON
				Order of 10: CS control by compressor speed down control ON
				Order of 1: PT control by compressor speed down control ON
C67	(Spare)	0,1 (0: Close, 1: Open)	–	Order of 100: Tc control by compressor speed down control ON
				Order of 10: (Spare)
				Order of 1: (Spare)
C68	Compressor stop cause	0 ~ 127	1	→ *1
C69	(Spare)	0,1 (0: Close, 1: Open)	–	Order of 100:
				Order of 10:
				Order of 1

Code No.	Contents of data display	Data display range	Minimum unit	Remarks
<Anomalous counter information>				
C70	Counter · Sensor wire disconnected	0 ~ 3	1	
C71	Counter · High pressure protection	0 ~ 5	1	
C72	Counter · Anomalous low pressure ③ (During operation)	0 ~ 5	1	
C73	Counter · Anomalous low pressure ① (During stop)	0 ~ 5	1	
C74	Counter · Discharge pipe 1 anomalous temperature	0 ~ 5	1	
C75	Counter · Anomalous FMo1 stop	0 ~ 5	1	
C76	(Spare) Counter · Anomalous FMo2 stop	0 ~ 127	1	
C77	Counter · Current cut (CM1)	0 ~ 4	1	
C78	Counter · Compressor 1 starting failure	0 ~ 20	1	
C79	Counter · Inverter 1 comunication error	0 ~ 4	1	
C80	(Spare) Counter · Power transistor 1 overheat	0 ~ 127	1	
C81	(Spare) Counter · Compressor 1 rotor lock	0 ~ 127	1	
C82	Counter · Inverter 1 desynchronism error	0 ~ 127	1	
C83	Counter · Inverter 1 comunication error cumulative	0 ~ 127	1	
C84	Counter · Indoor/outdoor comunication error	0 ~ 255	1	
C85	Counter · CPU reset	0 ~ 255		
C86	(Spare) Counter · Anomalous low pressure ② (Immediately after startup)			
C87	(Spare) Counter · Discharge pipe 2 anomalous temperature			
C88	(Spare) Counter · Current cut (CM2)			
C89	(Spare) Counter · Power transistor 2 overheat			
C90	(Spare) Counter · Compressor 2 starting failure			
C91	(Spare) Counter · Compressor 2 rotor lock			
C92	(Spare) Counter · Inverter 2 comunication error			
C93	(Spare)			
C94	(Spare)			
<Others>				
C95	(Spare)			
C96	Data reset			
C97		0 ~ 991	–	
C98	Program · POL version	0.00 ~ 9.99	0.01	Graphic language version Display position was changed from C79.
C99		–		

Code No.	Contents of data display	Data display range	Minimum unit	Remarks
<User setting>				
P00	(Spare)	– – – –	–	
P01	Operation preference switching	0 : (Factory default) 0,1	–	0: First push preference (Factory default) 1: Last push preference
P02	Outdoor fan snow protection control	0 : (Factory default) 0,1	–	0: Outdoor fan snow pretection control invalid (Factory default) 1: Outdoor fan snow pretection control valid
P03	Outdoor fan snow protection control ON time setting	30 : (Factory default) 10, 30 ~ 600 [Sec]	30	Changes like 10, 30, 60 90 … 600
P04	Demand ratio change value	OFF : (Factory default) OFF,000,040, 060,080		0: OFF, 1: 0%, 2: 40%. 3: 60%, 4: 80% Factory default is 0: OFF.
P05	Silent setting	0 : (Factory default) 0 ~ 9	1	
P06	External output function quota	0 : (Factory default) 0 ~ 9	1	
P07	External input (CNS1) function quota	0 : (Factory default) 0 ~ 9	1	
P08	(Spare) External input (CNS2) function quota	1 : (Factory default) 0 ~ 9	1	
P09	(Spare) External input (CNG1) function quota	2 : (Factory default) 0 ~ 9	1	
P10	(Spare) External input (CNG2) function quota	3 : (Factory default) 0 ~ 9	1	

Code No.	Contents of data display	Data display range	Minimum unit	Remarks
<New super link setting>				
P30	Super link communication satus	0,1	–	0: Old super link 1: New super link
P31	Start address input	1 : (Factory default) 0 ~ 127	1	To specify the start address at auto address setting
P32	Number of connected indoor units input	1 : (Factory default) 1 ~ 24 (*)	1	(*) Upper limit is maximum connectble number of indoor units for each outdoor unit model. To specify the number of connected indoor units at auto address setting.
P33	Polarity transmission	0 : (Factory default) 0,1	–	0: Does not transmit polarity. 1: Transmit polarity.
P34	Indoor address clear setting and display	0 : (Factory default) 0 ~ 3	1	0: Does not transmit clear setting signal 1: Transmits clear setting signal 2: Clear setting completed 3: Clear setting error (End by error) (*) If this setting changes "0"→"1" when [P35] setting is "1", the addresses of all connected indoor units are cleared..
P35	Indoor address clear transmission 2	0 : (Factory default) 0,1	–	0: Does not transmit clear setting signal 1: Transmits clear setting signal (* Interlocked with [P34].) For operation error protection
P36	(Spare)	–		
P37	(Spare)	–		
P38	(Spare)			
P39	(Spare)			

*1 Compressor stop cause
[definition of signal]
It shows the latest comprressor anomalous stop cause

Compressor stop cause		No
	At power on	0
Sensor disconnection and/or short-circuit	Ambient air temperature	1
	Outdoor heat exchanger temperture 1	2
	Outdoor heat exchanger temperture 2	3
	Discharge pipe temperature sensor (CM1)	4
	Suction pipe temperature sensor	5
	Sub-cooling temperature sensor (liquid side)	6
	Sub-cooling temperature sensor (gas side)	7
	Under-dome temperature sensor	8
	Power transistor temperature sensor	9
	Active filter temperature sensor	10
	High pressure sensor	11
	Low pressure sensor	12
Anomaly detection	HP anomaly	20
	LP anomaly	21
	Td1 anomaly	22
	FMo1 anomaly	23
	FMo2 anomaly	24
	Inverter 1 current cut	25
	Inverter 1 startup failure	26
	Inverter 1 communication erro	27
	Inverter 1 anomalous compressor induced voltage and torque	28
	Inverter 1 power tansistor overheat	29
	Inverter 1 rotor lock	30
	Liquid flooding anomaly	31
Stop by restriction	Outdoor operation mode heating/cooling switching	40
	Heating overload protection	41

(c) Saving of Operation Data

Mainly for investigating causes of market claims, operation data are always saved in memory. If any trouble occurs, the data writing is stopped and only the operation data prior to the time when the trouble occurs are recorded. These data can be loaded to a PC via RS232C connector of PCB and utilized for identifying causes.

(i) Operation data for a period of 30minutes prior to the present operation are saved and updated continuously.

(ii) If an anomalous stop occurs, the data are not updated any more.

(ii) Data are written in based on 1 minute sampling interval and next data will be transmitted to PC upon demand.

Data	Data range	Example
Software version	Ascii 15 bytes	KD3C218######## (# : NULL)
PID (Program ID)	Ascii 2 bytes	5D
Outdoor unit capacity	Ascii 3 bytes	As listed blow
Power supply frequency	Ascii 2 bytes	60
Outdoor address	Ascii 2 bytes	00 ~ 3F
Indoor address × 16 units	Ascii 2 bytes × 16 units	40 ~ 7F
Indoor capacity × 16 units	Ascii 3 bytes × 16 units	022 ~ 280

Outdoor unit composition	Outdoor unit capacity data	Remarks
Single type	Example: 24HP - [S24]	S: Display with Horse Power of single type or single use of combination type
Master unit of combination type	Example: 46HP - [S46]	S: Display with Horse Power of master unit of combination type
Slave unit of combination type	Example: 20HP - [C20]	C: Display with Horse Power of slave unit of combination type

(iv) Error retention and monitoring data

Code No.	Write contents	Record data				
		Data write range	Unit of write	Number of bytes	Contents	
0	Indoor 1 Thı-A	–14 ~ 50	A/D value	1	Suction	
1	Indoor 1 Thı-R1	0 ~ 72	A/D value	1	Heat exchanger 1	
2	Indoor 1 Thı-R2	0 ~ 72	A/D value	1	Heat exchanger 2	
3	Indoor 1 Thı-R3	0 ~ 72	A/D value	1	Heat exchanger 3	
4	Indoor 1 EEV	0 ~ 470	1 pulse	2		
5	Indoor 1 operation/stop	0,1	–	1	0	Stop
					1	Operation
6	Indoor 1 operation mode	0 ~ 4	–	1	0	Auto
					1	Dehumidifying
					2	Cooling
					3	Fan
					4	Heating
7	Indoor 1 request Hz	0 ~ 255	1Hz	1		
8	Indoor 1 answer Hz	0 ~ 255	1Hz	1		
9	Indoor 1 indoor local	–	–	1	Bit0	Anti-frost
					Bit1	EEV opening angle implementation
10	Indoor 1 Thi spare	–14 ~ 50	A/D value	1	Discharge	
11	Indoor 1 type	0 ~ 8	–	1	0	FDT
					1	FDK
					2	Others
					3	FDE
					4	FDTC
					5	
					6	
					7	
					60 ~	
12	Indoor 1PID	–	–	1		
The data of indoor unit No.2-16 are continued. (contents are same as above)						

Code No.	Write contents	Record data Data write range	Unit of write	Number of bytes	Contents	
0	Error code	00 ~ 99	–	1	00: No error on outdoor unit 01-99: All errors	
1	Error existing unit address	00 ~ FF	–	1	00 – 3F: Outdoor 40 – 6F: Indoor	
<Sensor value>						
2	Tho-A Ambient air temperature	-20 ~ 70	A/D value	1		
3	Tho-R1 Heat exchanger temp. 1	-40 ~ 75	A/D value	2		
4	(Spare) Tho-R2 Heat exchanger temp. 2	-40 ~ 75	A/D value	2		
5	Tho-D1 Discharge pipe temp. (CM1)	-20 ~ 140	A/D value	1		
6	Tho-S Suction pipe temperature	-40 ~ 75	A/D value	2		
7	Tho-SC Sub-cooling coil temp. 1	-40 ~ 75	A/D value	2		
8	Tho-H Sub-cooling coil temp. 2	-40 ~ 75	A/D value	2		
9	Tho-P1 Power transistor temp. (Radiator fin)	-20 ~ 140	A/D value	1		
10	(Spare) Tho-AF Temperature sensor (Active filter)	-20 ~ 140	A/D value	1		
11	(Spare) Tho-C1 Under-dome temp. (CM1)	-40 ~ 90	A/D value	1		
12	CT1 Current	0 ~ 50	A/D value	1		
13	High pressure sensor	0 ~ 4.15	A/D value	1		
14	Low pressure sensor	0 ~ 1.70	A/D value	1		
<Outdoor unit information>						
15	Number of connected indoor units	0 ~ 127	1 unit	1		
16	Capacity of connected indoor units	0 ~ 65535	–	2		
17	Number of indoor units with thermostat ON	0 ~ 255	1 unit	1		
18	Total capacity of indoor units with cooling thermostat ON	0 ~ 65535		2		
19	Total capacity of indoor units with heating thermostat ON	0 ~ 65535		2		
20	Operation mode	0 ~ 2	–	1	0	Stop
					1	Cooling
					2	Heating
21	Inverter CM1 actual operation frequency	0 ~ 255	1Hz	1		
22	FMo1 Actual fan speed	0 ~ 65535	10min-1	2		
23	(Spare) FMo2 Actual fan speed	0 ~ 65535	10min-1	2		
24	Required Hz total	0 ~ 65535	1Hz	2		
25	Discharge pressure saturated temperature	-50 ~ 70	0.01°C	2		
26	Suction pressure saturated temperature	-50 ~ 30	0.01°C	2		
27	Sub-cooling coil temp. sensor 1 saturated pressure	-0.68 ~ 4.15	0.01MPa	2		
28	Pressure ratio	1.0 ~ 10.0	0.1	1	→*1	
29	Cooling sub-cooling	0 ~ 50	0.1deg	2	→18-1.Operation information	
30	Suction overheat	0 ~ 50	0.1deg	2	→18-1.Operation information	
31	Sub-cooling coil overheat	0 ~ 50	0.1deg	2	→18-1.Operation information	
32	Discharge pipe overheat	0 ~ 50	0.1deg	2	→18-1.Operation information	
33	(Spare) Compressor 1 under-dome overheat	0 ~ 50	0.1deg	2		
34	Target Fk	0 ~ 65535	1Hz	2		
35	Answer Hz total	0 ~ 65535	1Hz	2		
36	Inverter 1 operation frequency command	0 ~ 120	1Hz	1		

Code No.	Write contents	Record data Data write range	Unit of write	Number of bytes	Contents		
37	FM01 Fan speed command	0 ~ 65535	10min-1	2			
38	(Spare) FMo2 Fan speed command	0 ~ 65535	10min-1	2			
39	EEVH1 opening degree	0 ~ 65535	1 pulse	2			
40	EEVSC opening degree	0 ~ 65535	1 pulse	2			
41	Compressor target cooling low pressure	0.00 ~ 2.00	0.01MPa	1			
42	Compressor target heating high pressure	0.00 ~ 4.15	0.01MPa	2			
43	Outdoor EEVH target overheat	0 ~ 25.5	0.1°C	1	Actual range: 5°C – 11°C		
44	Outdoor EEVH initial learning opeing position	0 ~ 255	1 pulse	1			
45	Outdoor EEVSC target overheat	0 ~ 25.5	0.1°C	1			
46		0 ~ 2550	10cc	1			
47		0 ~ 255	3 min.	1			
<PCB hardware input>							
48	External input	–	–	1	Bit0	63H1	0: Open, 1: Short-circuit
					Bit1	(Spare) 63H1-R	0: Open, 1: Short-circuit
					Bit2	CNS1	0: Open, 1: Short-circuit
					Bit3	(Spare) CNS2	0: Open, 1: Short-circuit
					Bit4	(Spare) CNG1	0: Open, 1: Short-circuit
					Bit5	(Spare) CNG2	0: Open, 1: Short-circuit
					Bit6	(Spare)	0: Open, 1: Short-circuit
					Bit7	(Spare)	0: Open, 1: Short-circuit
49	Dip SW [SW3]	–	–	1	Bit0	SW3-1	0 : OFF, 1 : ON
					Bit1	SW3-2	0 : OFF, 1 : ON
					Bit2	SW3-3	0 : OFF, 1 : ON
					Bit3	SW3-4	0 : OFF, 1 : ON
					Bit4	SW3-5	0 : OFF, 1 : ON
					Bit5	SW3-6	0 : OFF, 1 : ON
					Bit6	SW3-7	0 : OFF, 1 : ON
					Bit7	SW3-8	0 : OFF, 1 : ON
50	Dip SW [SW4]	–	–	1	Bit0	SW4-1	0 : OFF, 1 : ON
					Bit1	SW4-2	0 : OFF, 1 : ON
					Bit2	SW4-3	0 : OFF, 1 : ON
					Bit3	SW4-4	0 : OFF, 1 : ON
					Bit4	SW4-5	0 : OFF, 1 : ON
					Bit5	SW4-6	0 : OFF, 1 : ON
					Bit6	SW4-7	0 : OFF, 1 : ON
					Bit7	SW4-8	0 : OFF, 1 : ON
51	Dip SW [SW5]	–	–	1	Bit0	SW5-1	0 : OFF, 1 : ON
					Bit1	SW5-2	0 : OFF, 1 : ON
					Bit2	SW5-3	0 : OFF, 1 : ON
					Bit3	SW5-4	0 : OFF, 1 : ON
					Bit4	SW5-5	0 : OFF, 1 : ON
					Bit5	SW5-6	0 : OFF, 1 : ON
					Bit6	SW5-7	0 : OFF, 1 : ON
					Bit7	SW5-8	0 : OFF, 1 : ON

Code No.	Write contents	Record data Data write range	Unit of write	Number of bytes	Contents		
52	Dip SW [SW6]	–	–	1	Bit0	(Spare) SW6-1	0 : OFF, 1 : ON
					Bit1	(Spare) SW6-2	0 : OFF, 1 : ON
					Bit2	(Spare) SW6-3	0 : OFF, 1 : ON
					Bit3	(Spare) SW6-4	0 : OFF, 1 : ON
					Bit4	(Spare) SW6-5	0 : OFF, 1 : ON
					Bit5	(Spare) SW6-6	0 : OFF, 1 : ON
					Bit6	(Spare) SW6-7	0 : OFF, 1 : ON
					Bit7	(Spare) SW6-8	0 : OFF, 1 : ON
53	Jumper SW	–	–	1	Bit0	J11	0: Open, 1: Short-circuit
					Bit1	J12	0: Open, 1: Short-circuit
					Bit2	J13	0: Open, 1: Short-circuit
					Bit3	J14	0: Open, 1: Short-circuit
					Bit4	J15	0: Open, 1: Short-circuit
					Bit5	J16	0: Open, 1: Short-circuit
					Bit6	(Spare)	
					Bit7	(Spare)	
<PCB hardware output>							
54	Relay output	–	–	1	Bit0	52C1	0 : OFF, 1 : ON
					Bit1	20S	0 : OFF, 1 : ON
					Bit2	CH1	0 : OFF, 1 : ON
					Bit3	(Spare) SV1	0 : OFF, 1 : ON
					Bit4	(Spare) SV6	0 : OFF, 1 : ON
					Bit5	(Spare) SV11	0 : OFF, 1 : ON
					Bit6	(Spare) SV12	0 : OFF, 1 : ON
					Bit7	(Spare) FMC1,2	0 : OFF, 1 : ON
55	Relay output	–	–	1	Bit0	Operation output (CnH)	0 : OFF, 1 : ON
					Bit1	Error output (CnY)	0 : OFF, 1 : ON
					Bit2	External output (CnZ)	0 : OFF, 1 : ON
					Bit3	(Spare)	0 : OFF, 1 : ON
					Bit4	(Spare)	0 : OFF, 1 : ON
					Bit5	(Spare)	0 : OFF, 1 : ON
					Bit6	(Spare)	0 : OFF, 1 : ON
					Bit7	(Spare)	0 : OFF, 1 : ON
<Related to compressor>							
56	CM1 Cumulative operation hours (Approx.)	0 ~ 65535	1h	2			
57	CM1 Starting times	0 ~ 65535	× 20 times	2			
58	CM1 3-minute delay timer	0 ~ 180	1 sec	1			
59	Energizing time count down	0 ~ 255	1 min	1			
60	Control status CH Compressor protection timer	0 ~ 360	3 min	1			
61	Control status CH Compressor protection start	0 ~ 15	–	1	15	Protection start complete	
					0 ~ 14	Protection start ON	

Code No.	Write contents	Record data Data write range	Unit of write	Number of bytes	Contents		
<Control status>							
62	Control status Oil return	0 ~ 2	–	1	0	None	
					1	Oil return ON	
63	Control status Defrost condition	0 ~ 3	–	1	0	None	
					1	Temperature condition	
					2	Time condition	
64	Control status Defrost status	0 ~ 4	–	1	0	None	
					1	Defrost status 1	
					2	Defrost status 2	
					3	Defrost status 3	
					4	Defrost status 4	
65	Control status Cooling low pressure anomaly recovering status	0 ~ 4	–	1	0	None	
					1	Status 1	
					2	Status 2	
					3	Status 3	
					4	Status 4	
66	Control status 1			1	Bit0	Test run control implementing	0: Normal, 1: Implementing
					Bit1	Demand control implementing	0: Normal, 1: Implementing
					Bit2	Silent mode implementing	0: Normal, 1: Implementing
					Bit3		0: Normal, 1: Implementing
					Bit4		0: Normal, 1: Implementing
					Bit5	(Spare)	0: Normal, 1: Implementing
					Bit6	Implementing pump down control at start/stop	0: Normal, 1: Implementing
					Bit7	Low ambient air temperature control implementing (→ *1)	0: Normal, 1: Implementing
67	Control status 2			1	Bit0	Pump-down control for removal of unit implementing	0: Normal, 1: Implementing
					Bit1	Compressor dilution protection (→ *1)	0: Normal, 1: Implementing
					Bit2	(Spare) Forced out refrigerant from outdoor heat exchanger	0: Normal, 1: Implementing
					Bit3	Forced out refrigerant from indoor heat exchanger	0: Normal, 1: Implementing
					Bit4	(Spare)	0: Normal, 1: Implementing
					Bit5	(Spare)	0: Normal, 1: Implementing
					Bit6	(Spare)	0: Normal, 1: Implementing
					Bit7	(Spare)	0: Normal, 1: Implementing

Code No.	Write contents	Record data Data write range	Unit of write	Number of bytes	Contents		
<Protection control status>							
68	Protection control Status 1			1	Bit0	HP protection 1 Compressor capacity control	0: Normal, 1: Implementing
					Bit1	HP protection 2 (→ *1) Indoor EEV minimal opening control at heating stop	0: Normal, 1: Implementing
					Bit2	HP protection 3 Indoor EEV Control at heating overload	0: Normal, 1: Implementing
					Bit3	HP protection 4 Indoor unit forced thermostat OFF control under heating at overload	0: Normal, 1: Implementing
					Bit4	LP protection 1 Compressor capacity control	0: Normal, 1: Implementing
					Bit5	LP protection 2 Compressor speed increasing rate control	0: Normal, 1: Implementing
					Bit6	LP protection 3 (→ *1) Outdoor EEV control	0: Normal, 1: Implementing
					Bit7	Td protection 1 Compressor capacity control	0: Normal, 1: Implementing
69	Protection control Status 2			1	Bit0	Td protection 2 (→ *1) Compressor dilution ratio protection control	0: Normal, 1: Implementing
					Bit1	Td protection 3 (→ *1) Indoor EEV minimal opening control at heating stop	0: Normal, 1: Implementing
					Bit2	Td protection 4 (→ *1) Outdoor EEV control	0: Normal, 1: Implementing
					Bit3	Compression ratio protection 1 Compressor capacity control	0: Normal, 1: Implementing
					Bit4	Compression ratio protection 2 (→ *1) Outdoor EEV control	0: Normal, 1: Implementing
					Bit5	CS protection 1 Compressor capacity control	0: Normal, 1: Implementing
					Bit6	PT protection 1 Compressor capacity control	0: Normal, 1: Implementing
					Bit7	(Spare) Tc protection 1 Compressor capacity control	0: Normal, 1: Implementing
70	Protection control Status 3			1	Bit0	CS protection 2 Compressor frequency upper limit control	0: Normal, 1: Implementing
					Bit1	(Spare)	0: Normal, 1: Implementing
					Bit2	(Spare)	0: Normal, 1: Implementing
					Bit3	(Spare)	0: Normal, 1: Implementing
					Bit4	(Spare)	0: Normal, 1: Implementing
					Bit5	(Spare)	0: Normal, 1: Implementing
					Bit6	(Spare)	0: Normal, 1: Implementing
					Bit7	(Spare)	0: Normal, 1: Implementing
71	Cause of compressor stop	0 ~ 127	–	1	→18 – 1. Operatio n information		

Code No.	Write contents	Record data Data write range	Unit of write	Number of bytes	Contents		
<Error counter information>							
72	Control status HP (63H1) anomaly counter	0 ~ 5	1	1			
73	Control status LP anomaly counter while running	0 ~ 5	1	1			
74	Control status LP anomaly counter while stopping	0 ~ 5	1	1			
75	Control status Td1 error counter	0 ~ 5	1	1			
76	Control status DC fan motor 1 error counter	0 ~ 5	1	1			
77	(Spare) Control status DC fan motor 2 error counter	0 ~ 127	1	1			
78	Control status sensor wire disconnected counter	0 ~ 3	1	1			
79	Control status INV1 current cut error counter	0 ~ 4	1	1			
80	Control status INV1 starting failure counter	0 ~ 20	1	1			
81	Control status INV1 communication error counter	0 ~ 4	1	1			
82	Control status INV1 desynchronism error counter	0 ~ 127	1	1			
83	Control status INV1 communication error counter cumulative	0 ~ 255	1	1			
84	(Spare) Control status INV1 power transistor overheat error counter	0 ~ 127	1	1			
85	(Spare) Control status INV1 rotor lock error counter	0 ~ 127	1	1			
<Setting value display>							
86	Operation priority switching outsoor fan snow protection control	0,1	–	1	0	First push priority	
					1	Last push priority	
87	Outdoor fan snow protection control	0,1		1	0	Invalid	
					1	Valid	
88	Outdoor fan snow protection control ON time setting	30: (Factory default) 10, 30 – 600 [sec]	10 sec	1			
89	Demand ratio change value	OFF, 000, 040, 060, 080 Factory default 0: OFF	–	1			
90	Silent mode setting	0 ~ 9	–	1			
91	(Spare) CNS1 function quota value	0 ~ 9	–	1			
92	(Spare) CNS2 function quota value	0 ~ 9	–	1			
93	(Spare) CNG1 function quota value	0 ~ 9	–	1			
94	(Spare) CNG2 function quota value	0 ~ 9	–	1			
95	External output function quota	0 ~ 9	–	1			

Code No.	Write contents	Record data Data write range	Unit of write	Number of bytes	Contents		
<Other>							
104	Override number	0 ~	–	1			
	<Indoor unit information>						
105				1	Bit0		
					Bit1		
					Bit2		
					Bit3		
					Bit4	(Spare)	
					Bit5	(Spare)	
					Bit6	(Spare)	
					Bit7	(Spare)	
106	Registered indoor 1 – 8 operation mode	0 ~ 4	–	8	0	Auto	
					1	Humidifying	
					2	Cooling	
					3	Fan	
					4	Heating	
107	Registered indoor 1 – 8 request Hz	0 ~ 255	1Hz	8			
108	Registered indoor 1 – 8 answer Hz	0 ~ 255	1Hz	8			
<Check operation information>							
109	Check operation status	0 ~ 7	–	1	0	Normal	
					1	Check operation starting condition insufficient	
					2	Check operation preparation operation	
					3	Check operation implementation	
					4	Check operation interrupted	
					5	Operation valve closing failure	
					6	Indoor unit failure	
					7	Check operation normal ending	
<Refrigerant amount judgment information>		–	–	–	–	–	–
110	(Spare) Refrigerant amount judgment control status	0 ~ 255	–	1			

Code No.	Write contents	Record data Data write range	Unit of write	Number of bytes	Contents		
<Piping washing operation information>							
111		0 ~ 7	–	1	0		
					1		
					2		
					3		
					4		
					5		
					6		
					7		
112	Registered indoor 1 – 8 unmatch check error	–	–	1	Bit0	Indoor 1 unmatch check error	0 : OFF, 1 : ON
					Bit1	Indoor 2 unmatch check error	0 : OFF, 1 : ON
					Bit2	Indoor 3 unmatch check error	0 : OFF, 1 : ON
					Bit3	Indoor 4 unmatch check error	0 : OFF, 1 : ON
					Bit4	Indoor 5 unmatch check error	0 : OFF, 1 : ON
					Bit5	Indoor 6 unmatch check error	0 : OFF, 1 : ON
					Bit6	Indoor 7 unmatch check error	0 : OFF, 1 : ON
					Bit7	Indoor 8 unmatch check error	0 : OFF, 1 : ON
113	Registered indoor 1 – 8 EEV check error	–	–	1	Bit0	Indoor 1 EEV check error	0 : OFF, 1 : ON
					Bit1	Indoor 2 EEV check error	0 : OFF, 1 : ON
					Bit2	Indoor 3 EEV check error	0 : OFF, 1 : ON
					Bit3	Indoor 4 EEV check error	0 : OFF, 1 : ON
					Bit4	Indoor 5 EEV check error	0 : OFF, 1 : ON
					Bit5	Indoor 6 EEV check error	0 : OFF, 1 : ON
					Bit6	Indoor 7 EEV check error	0 : OFF, 1 : ON
					Bit7	Indoor 8 EEV check error	0 : OFF, 1 : ON
114	Registered indoor 1 – 8 EEV opening pulse	0 ~ 127	Pulse	8			

(2) Outdoor PCB setting

Code	Input	Remarks
SW1	Outdoor address No. (Order of 10)	
SW2	Outdoor address No. (Order of 1)	
SW3-1	Inspection LED reset	
SW3-7	Forced heating/cooling	
SW5-1	Test run SW	
SW5-2	Test run Heating/Cooling	
SW5-3	Pump down SW	
SW7	Data erase/Write	
SW8	7-segment display code No. increasing (order of 1)	
SW9	7-segment display code No. increasing (order of 10)	
SW4-1	Model selection	See following table.
SW4-2		
SW4-3		
SW4-4		
SW4-7	Demand ratio selection	See following table.
SW4-8	Demand ratio selection	See following table.
J13	External input Level/Pulse	
J15	Defrost start temperature Normal/Cold region	

Note (1) Jumper wires J13, J15 indicate short-circuit/open.
(2) Dip switch SW's indicate OFF/ON.

■ Model selection with SW4-1 – SW4-4

Switch \ Model	FDC112KXEN6	FDC112KXES6	FDC140KXEN6	FDC140KXES6	FDC155KXEN6	FDC155KXES6
SW4-1	0	0	1	1	0	0
SW4-2	0	0	0	0	1	1
SW4-3	1	1	1	1	1	1
SW4-4	1	0	1	0	1	0

Note (1) 0: OFF, 1: ON

■ Demand ratio selection with SW4-7, SW4-8

SW4-7	SW4-8	Compressor capacity (%)
0	0	80
1	0	60
0	1	40
1	1	0

Note (1) 0: OFF, 1: ON

4.7 System troubleshooting procedure

(1) Basics of troubleshooting

Basic troubleshooting is to check/analyze/save data by connecting the maintenance PC.

Whenever arriving at the site, always connect the maintenance PC before starting work.

Method of error data analysis (Basic procedure)

- Identify whether particular error occurred during operation or operation is stopped.
- Is it caused by the installation conditions of outdoor/indoor unit? (Refrigerant quantity, pipe length, short-circuit, clogged filter, etc.)
- Isn't there any beginner's mistake at the installation? (Wrong address, mistake in piping or wiring, etc.)
- Is the failure related to any hardware (parts)? (SV main body, coil, capillary, check valve, sensor, etc.)
- Is it a component requiring close attention?
  Compressor, inverter PCB and outdoor unit DC fan motor
- Is it a failure of electric equipment part?

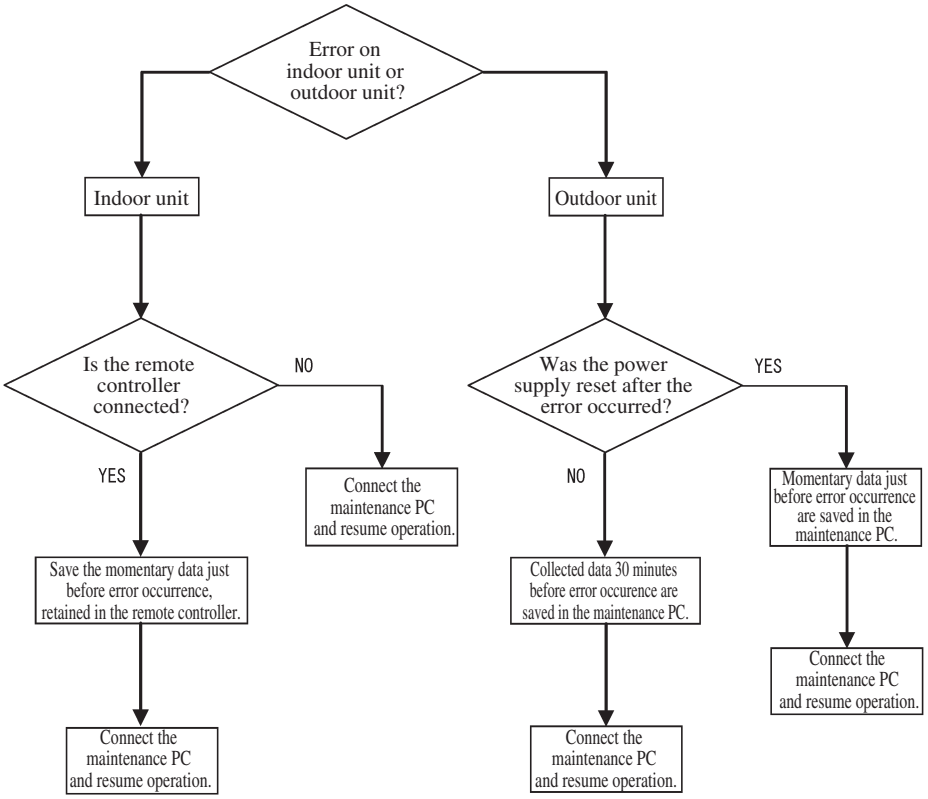

(2) Explanation of troubleshooting

(a) Checking 15V on the control PCB (Step to check if the inverter PCB fails or not)

Use this to diagnose E41, E42, E45 and E48.

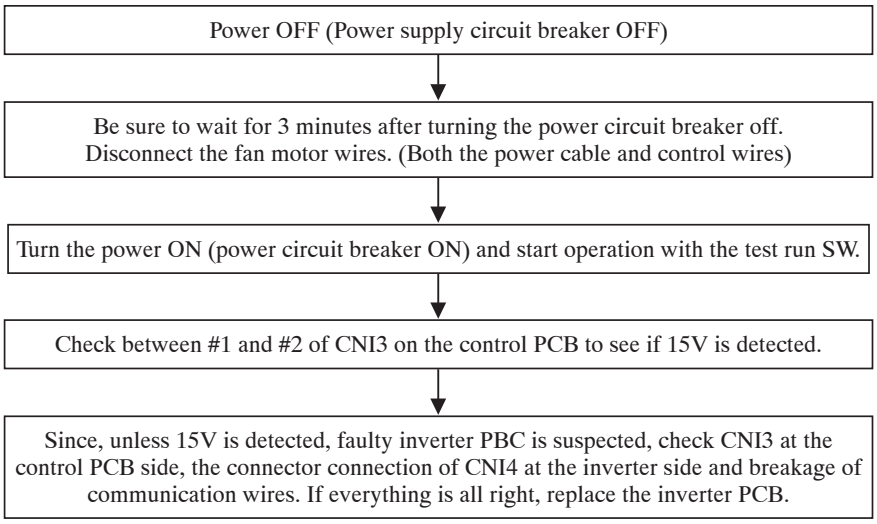

(b) Checking method of power transistor module (including drive circuit)

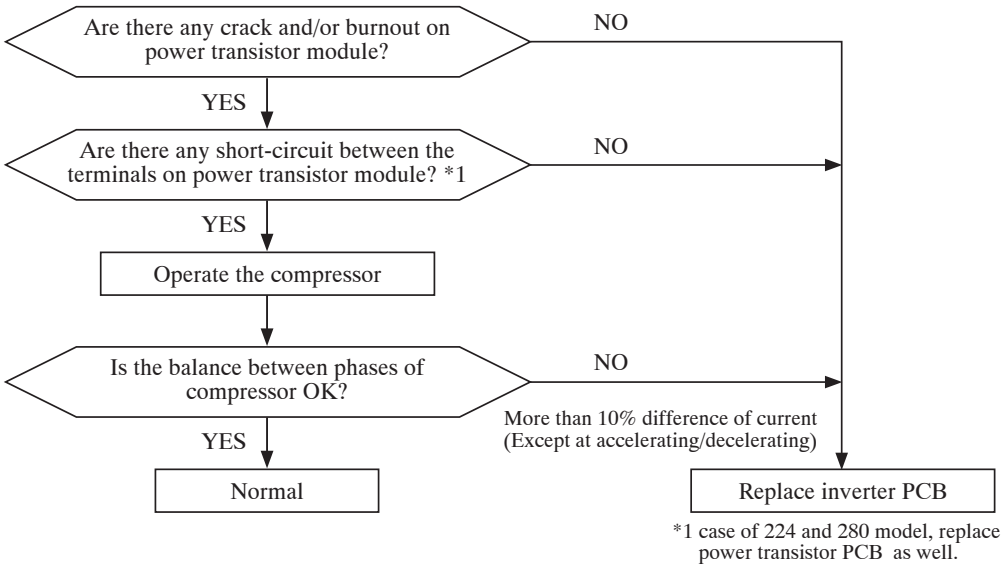

Tester		FDC112, 140, 155KXE6	FDC224-680KXE6
Terminal (+)	Terminal (–)	Normal value (Ω)	
P	N	about 1M	Several 10 M
N	P	about 300-400	Several M
P	U	0	Several 10 M
P	V		
P	W		
N	U	about 1.2M	Several 100K
N	V		
N	W		
U	P	about 1.3M	Several 100K
V	P		
W	P		
U	N	0	Several 10 M
V	N		
W	N		

Note (1) When a measured value is 0 – a few kΩ, the element may be broken. Replace the power transistor part.

***1 Inspection of short-circuit on the power transistor module terminals**

Disconnect the wiring of compressor and check for short-circuit with a tester.

Inspect between terminals of:

P-U, P-V, P-W, N-U, N-V, N-W and P-N

It will be easier to contact the tester at the following place at each terminal.

P: P terminal of power transistor

N: N terminal of power transistor

U: End of red harness to compressor

V: End of white harness to compressor

W: End of blue harness to compressor

(3) Contents of troubleshooting

(a) List of inspection displays

1) Indoor and outdoor units

Remote controller error code	7-segment display	Name of inspection	Classification	Page
E1	–	Remote controller communication error	Communication error	330
E2	–	Duplicated indoor unit address	Address setting error	331
E3	–	Outdoor unit signal line error	Address pairing setting error	332
E5	–	Communication error during operation	Communication error	333
E6	–	Indoor heat exchanger temperature thermistor anomaly	Thermistor wire breakage	334
E7	–	Intake air temperature thermistor anomaly	Thermistor wire breakage	335
E9	–	Drain trouble	System error	336
E10	–	Excessive number of indoor units (more than 17 units) by controlling with one remote controller	Communication error	337
E12	–	Address setting error on indoor unit	Address setting error	338
E16	–	Indoor fan motor anomaly (In case of FDT)	DC fan motor error	339
	–	Indoor fan motor anomaly (In case of FDK)	DC fan motor error	340
E19	–	Indoor unit operation check drain motor check setting error	Setting error	341
E28	–	Remote controller temperature thermistor anomaly	Thermistor wire breakage	342
E30	E30	Unmatch connection of indoor and outdoor unit	System error	343
E31	E31	Duplicated outdoor unit address No.	Address setting error	344
E32	E32	Open L3 Phase on power supply at primary side	Site setting error	345
E36	E36-1	Discharge pipe temperature error (Tho-D1)	System error	346
	E36-3	Liquid flooding anomaly	System error	347
E37	E37-1, 2 E37-5, 6	Outdoor heat exchanger and subcooing coil temperature thermistor anomaly	Thermistor wire breakage	348
E38	E38	Ambient air temperature thermistor anomaly (Tho-A)	Thermistor wire breakage	349
E39	E39-1	Discharge pipe temperature thermistor anomaly (Tho-D1)	Thermistor wire breakage	350
E40	E40	High pressure error (63H1-1 activated)	System error	351
E42	E42-1	Current cut	System error	352 353
E43	E43-1 E43-2	Excessive number of indoor units connected, excessive total capacity of connection	Site setting error	354
E45	E45-1	Communication error between inverter PCB and outdoor control	Communication error	355
E46	–	Mixed address setting methods coexistent in same network	Address setting error	356
E48	E48-1 E48-2	Outdoor DC fan motor anomaly	DC fan motor error	357
E49	E49	Low pressure error	System error	358
E53/E55	E53/E55-1	Suction pipe temperature thermistor anomaly (Tho-S), Under-dome temperature thermistor anomaly (Tho-C1)	Thermistor wire breakage	359
E54	E54-1 E54-2	High pressure sensor/Low pressure sensor anomaly	Thermistor wire breakage	360
E56	E56-1, 2	Power transitor temperature sensor anomaly (Tho-P1, Tho-P2)	Thermistor wire breakage	361
E58	E58	Anomalous compressor by loss of synchronism	System error	362
E59	E59	Compressor startup failure	System error	363
E63	E63	Emergency stop	Site setting error	364

(b) Troubleshooting

Error code	LED	Green	Red	Content
Remote controller: None 7-segment display:	Indoor	Keeps flashing	Stays Off	Operates but does not cool
	Outdoor	Keeps flashing	Stays Off	

1. Applicable model

All models

2. Error detection method

3. Condition of error displayed

4. Presumable cause

- Poor compression of compressor
- Faulty expansion valve operation

5. Troubleshooting

Diagnosis	Countermeasure
Check the indoor fan operation. Check the temperature differnce between inlet and outlet air.	
Is the temperature differnce between inlet and outlet air 10-20degC at cooling? — YES → Does the heat load increase after installtion? — NO →	It is normal. (This unit is designed to start in the soft start mode by detecting the compressor under dome temperature when it restart after power reset.
Does the heat load increase after installtion? — YES → Mistake in model selection. Calculate heat load once more.	It is necessary to replace to higher capacity unit or to install additional unit.
Is the temperature differnce between inlet and outlet air 10-20degC at cooling? — NO → Compressor is operating. — NO → "WAIT" message is displayed (for 3 seconds) when performing cooling, defrosting and heating operations from the remote controller. — YES →	Compressor refrigerant oil protection control at starting is activated. For the contents of control, refer to the compressor start control.
"WAIT" message is displayed (for 3 seconds) when performing cooling, defrosting and heating operations from the remote controller. — NO →	Compressor may be stopped by the error detection control. For the contents of control, refer to anomalous stop control by controlling compressor rotation speed of microcomputor control functions.
Compressor is operating. — YES → Is the compressor rotation speed low? — NO →	Inspect the followings. • Minor clogging of filter • Minor fouling of heat exchanger • Minor short-circuit • Minor shortage of refrigerant amount • Poor compression of compressor
Is the compressor rotation speed low? — YES → Check which control "Determination control of conpressor rotation speed" or "Protective control by controlling compressor rotation speed" is appropriate to this phenomenon.	
Are the temperature conditions of room and ambient air close to the rated conditions? (1) — YES →	Considering appropriate operation control, check suspicious points. Inspect the followings for reference. • Major clogging of filter • Major fouling of heat exchanger • Major short-circuit • Major shortage of refrigerant amount • Compressor protection ON • Indoor fan tap • Valid setting of silent mode
Are the temperature conditions of room and ambient air close to the rated conditions? (1) — NO → The unit is operating normally but is operating under the contol for protecting compressor or other respective parts.	

Note (1) Ambient: 35°C, Room: 27°CDB/19°CWB

Note:

Error code	LED	Green	Red	Content
Remote controller: None 7-segment display:	Indoor	Keeps flashing	Stays Off	Operates but does not heat
	Outdoor	Keeps flashing	Stays Off	

1. Applicable model

All models

2. Error detection method

3. Condition of error displayed

4. Presumable cause

- Faulty 4-way valve operation
- Poor compression of compressor
- Faulty expansion valve operation

5. Troubleshooting

Diagnosis	Countermeasure
Check the indoor unit fan operation. Check the temperature differnce between inlet and outlet air.	
Is the temperature differnce between inlet and outlet air 10-30degC at heating? — YES → Does the heat load increase after installtion? — NO →	It is normal. (This unit is designed to start in the soft start mode by detecting the compressor under dome temperature when it restart after power reset.
Does the heat load increase after installtion? — YES → Mistake in model selection. Calculate heat load once again. →	It is necessary to replace to higher capacity one or to install additional unit.
Is compressor operating? — NO → "WAIT" message is displayed (for 3 seconds) when performing cooling, defrosting and heating operations from the remote controller. — YES →	Compressor refrigerant oil protection control at starting is activated. For the contents of control, refer to the compressor start control
"WAIT" message is displayed (for 3 seconds) when performing cooling, defrosting and heating operations from the remote controller. — NO →	Compressor may be stopped by the error detection control.
Is compressor operating? — YES → Is the compressor rotation speed low? — NO →	Inspect the followings. • Minor clogging of filter • Minor fouling of heat exchanger • Minor short-circuit • Minor shortage of refrigerant amount • Poor compression of compressor
Is the compressor rotation speed low? — YES → Are the temperature conditions of room and ambient air close to close to the rated conditions? (1) — YES →	Considering appropriate operation control, check suspicious points. Inspect the followings for reference. • Major clogging of filter • Major fouling of heat exchanger • Major short-circuit • Major shortage of refrigerant amount • Compressor protection ON • Indoor fan tap • Valid setting of silent mode
Are the temperature conditions of room and ambient air close to close to the rated conditions? (1) — NO → The unit is operating normally but is operating under the contol for protecting compressor or other respective parts.	

Note (1) Ambient: 7°C, Room: 20°CDB

Note:

Error code	LED	Green	Red	Content
Remote controller: None 7-segment display:	Indoor	Stays Off	Stays Off	Earth leakage breaker activated
	Outdoor	Stays Off	Stays Off	

1. Applicable model

All models

2. Error detection method

3. Condition of error displayed

4. Presumable cause

- Defective compressor
- Noise

5. Troubleshooting

Diagnosis	Countermeasure
Are the insulation resistance and and coil resistance of compressor OK? — NO →	Replace compressor. *
YES ↓	
Is insulation of respective harnesses OK? Is any harness bitten between pannel and casing or etc? — NO →	Secure insulation resistance.
YES ↓	
Check the outdoor unit grounding wire/earth leakage breaker.	

Check of the outdoor unit grounding wire/earth leakage breaker

① Run an independent grounding wire from the grounding screw of outdoor unit to the grounding terminal on the distribution panel. (Do not connect to another grounding wire.)
② In order to prevent malfunction of the earth leakage breaker itself, confirm that it is conformed to higher harmonic regulation.

* Insulation resistance of compressor
- Immediately after installation or when the unit has been left for long period without power supply, the insulation resistance may drop to a few MΩ because of refrigerant migrated in the compressor.
  When the earth breaker is activated at lower insulation resistance, check the following points.

① 6 hours after power ON, check if the insulation resistance recovers to normal.
When power ON, crankcase heater heat up compressor and it evaporates the refrigerant migrated in the compressor.
② Check if the earth leakage breaker is conformed to higher harmonic regulation or not.
Since the unit is equipped with inverter, it is necessary to use components conformed to higher harmonic regulation to prevent malfunction of earth leakage breaker.

Note:

Error code	LED	Green	Red	Content
Remote controller: None 7-segment display:	Indoor	–	–	Excessive noise/vibration (1/3)
	Outdoor	–	–	

1. Applicable model

All models

2. Error detection method

3. Condition of error displayed

4. Presumable cause

① Improper installation work
- Improper vibration-proof work at instllation
- Insufficient strength of mounting face

② Defective product
- Before/after shipping from factory

③ Improper adjustment during commissioning
- Excess/shortage of refrigerant, etc.

5. Troubleshooting

Diagnosis

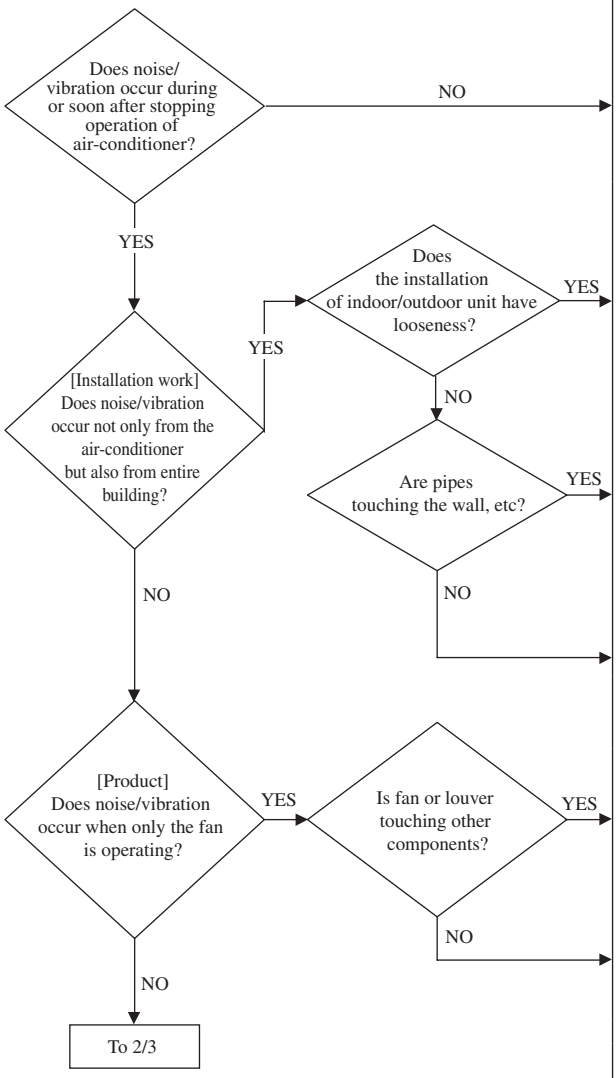

Countermeasure

If excessive noise/vibration persists when sufficient time has elapsed after stopping the unit, it is considered that the air-conditioner is not the source.

Check the installed condition carefully, and correct the installed position or insert rubber cushions into the gap or take other measure in order to eliminate looseness.

Prevent the vibration from transmitting to wall and etc by fixing pipes on the wall tightly or wrapping rubber cushion around the pipe which goes through the hole in the wall or applying other appropriate means.

Strength of ceiling wall, floor, etc. may be insufficient. Review the installation place or apply reinforcement to increase the strength.

Check for leaning of installed unit or incorrect mounting of fan, louver or motor, and then specify the contacting point and correct it.

When the heat exchanger or filter is clogged, clean them. In case that the unit is installed at the site where background noise is very low, small noise from indoor unit can be heard, but it is normal. Before installation, check for background noise. If backgound nois is very low, convince client prior to installation.

Note:

Error code	LED	Green	Red	Content
Remote controller: None 7-segment display:	Indoor	–	–	Excessive noise/vibration (2/3)
	Outdoor	–	–	

1. Applicable model

All models

2. Error detection method

3. Condition of error displayed

4. Presumable cause

5. Troubleshooting

Diagnosis	Countermeasure
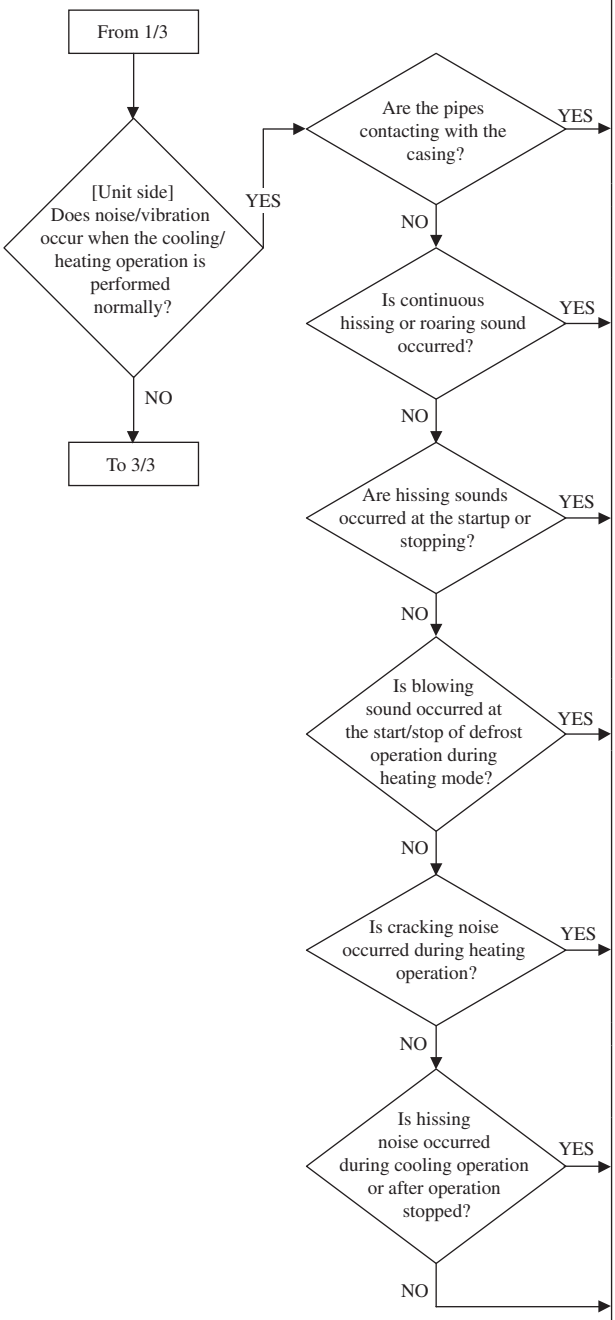	

Rearrange the piping to avoid contact with the casing.

Noise/vibration is generated when the refrigerant gas or liquid flows through inside of piping of air-conditioner. It is likely to occur particularly during cooling or defrosting in the heating mode. It is normal.

The noise/vibration occurs when the refrigerant starts or stops flowing. It is normal.

When the defrosting starts or stops during heating mode, the refrigerant flow is reversed due to switching 4-way valve. This causes a large change in pressure which produces a blowing sound. It may accompany also the hissing sounds as mentioned above. This is normal.

After the start or stop of heating operation or during defrosting, abrupt changes in temperature cause resin parts to shrink or expand. This is normal.

It is the sound produced by the drain pump that discharges drain from the indoor unit. The pump continues to run for 5 minutes after stopping the cooling operation. This is normal.

Apply the damper sealant at places considered to be the sources such as the pressure reducing mechanism (expansion valve), capillary, etc.

Note:

Error code	LED	Green	Red	Content
Remote controller: None 7-segment display:	Indoor	–	–	Excessive noise/vibration (3/3)
	Outdoor	–	–	

1. Applicable model

All models

2. Error detection method

3. Condition of error displayed

4. Presumable cause

5. Troubleshooting

Diagnosis	Countermeasure
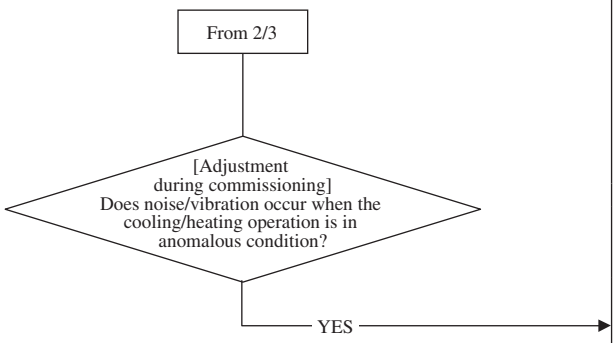	If insufficient cooling/heating problem happens due to anomalous operating conditions at cooling /heating, followings are suspicious. • Overcharge of refrigerant • Insufficient charge of refrigerant • Intrusion of air, nitrogen, etc. In such case, it is necessary to recover refrigerant, vacuum-dry and recharge refrigerant. * Since there could be many causes of noise/vibration, the above do not cover all. In such case, check the conditions when, where, how the noise/vibration occurs according to following check point. • Indoor/outdoor unit • Cooling/heating/fan mode • Startup/stop/during operation • Operating condition (Indoor/outdoor temperatures, pressure) • Time it occurred • Operation data retained by the remote controller such as compressor rotation speed, heat exchanger temperature, EEV opening degree, etc. • Tone (If available, record the noise) • Any other anomalies

Note:

Error code	LED	Green	Red	Content
Remote controller: None 7-segment display:	Indoor	Keeps flashing	Stays Off	Louver motor failure
	Outdoor	Keeps flashing	Stays Off	

1. Applicable model

2. Error detection method

3. Condition of error displayed

4. Presumable cause

5. Troubleshooting

Diagnosis	Countermeasure

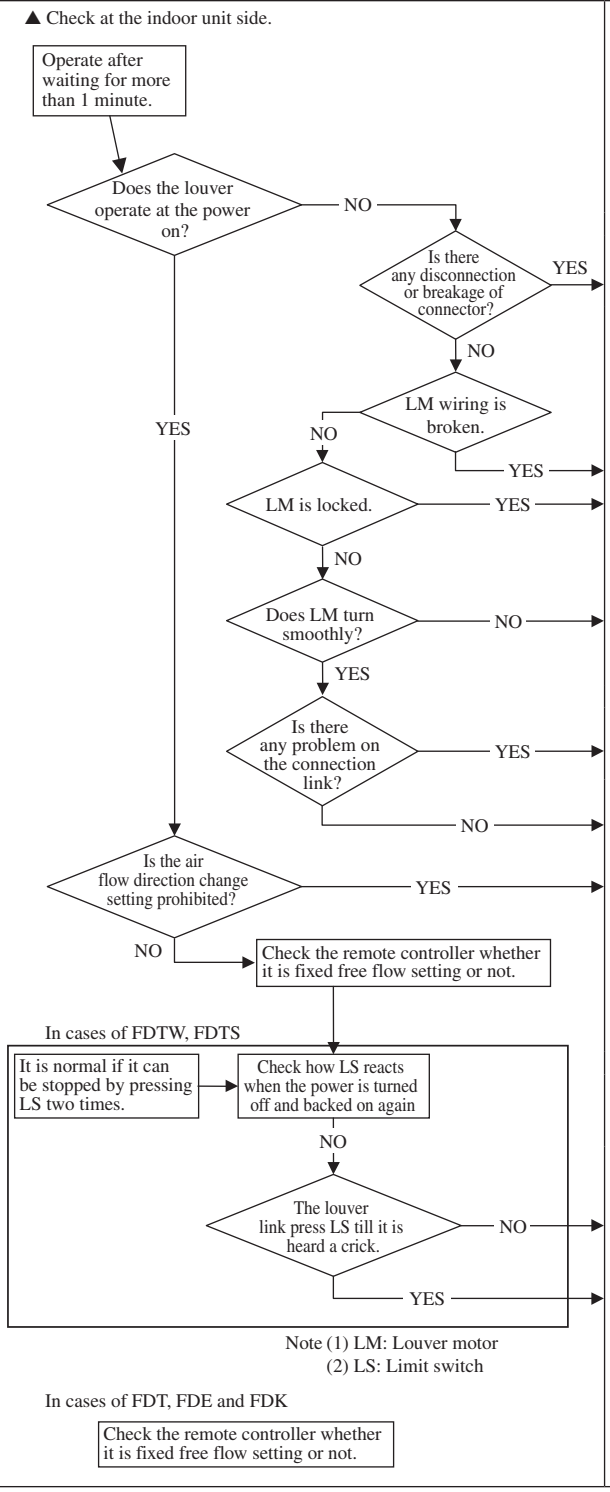

Note:

Error code	LED	Green	Red	Content
Remote controller: None 7-segment display:	Indoor	Stays Off	Stays Off	Power supply system error (Power supply to indoor unit PCB)
	Outdoor	Stays Off	2 times flash	

1. Applicable model

All models

2. Error detection method

3. Condition of error displayed

4. Presumable cause

- Misconnection or breakage of connecting wires
- Blown fuse
- Faulty transformer
- Faulty indoor power PCB
- Broken harness
- Faulty indoor control PCB

5. Troubleshooting

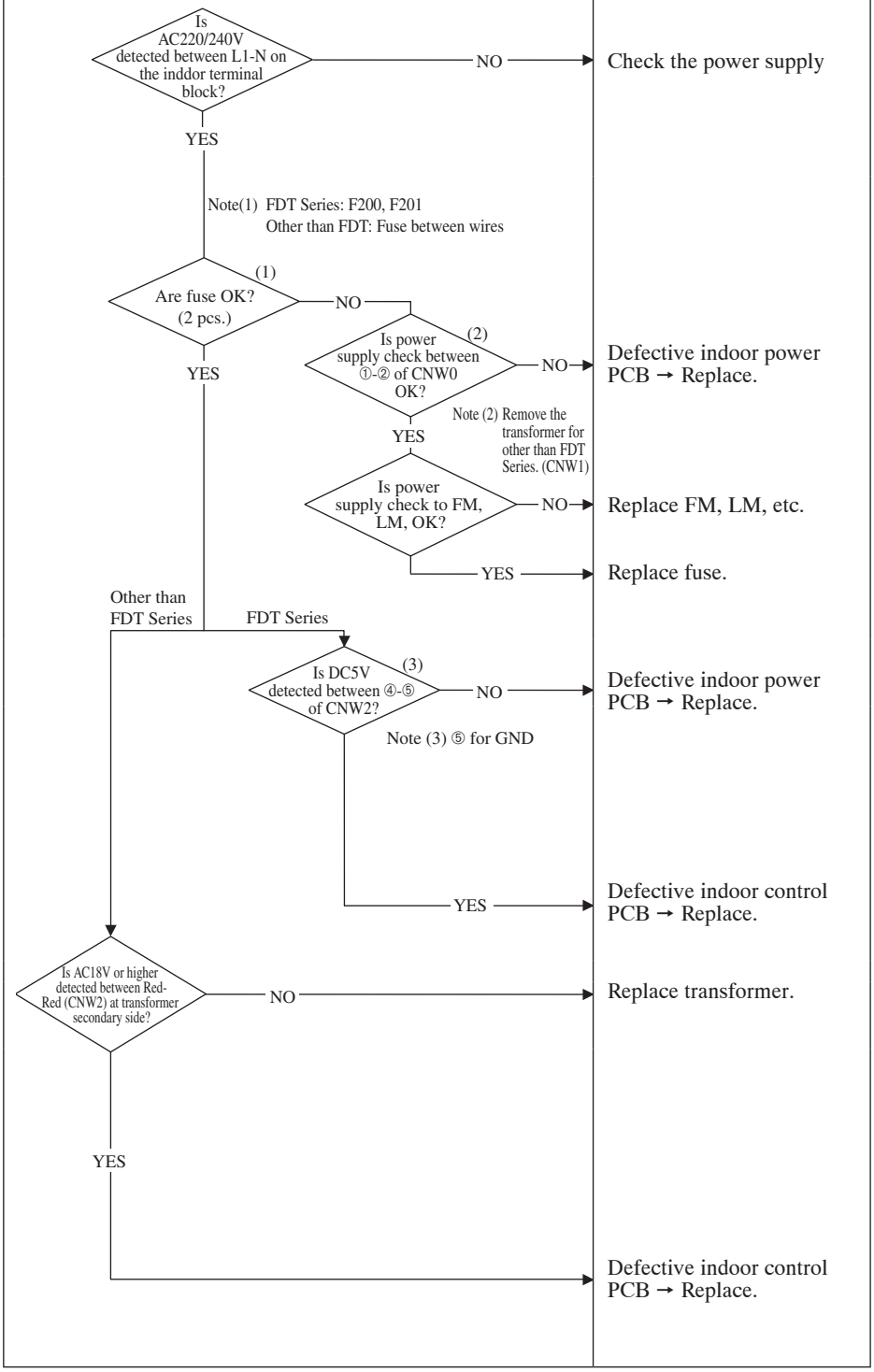

Note:

Error code	LED	Green	Red	Content
Remote controller: None 7-segment display:	Indoor	Stays Off	Keeps lighting	Power supply system error (Power supply to remote controller)
	Outdoor	Stays Off	Keeps lighting	

1. Applicable model

All models

2. Error detection method

3. Condition of error displayed

4. Presumable cause

- Remote controller wire breakage/short-circuit
- Defective remote controller
- Malfunction by noise
- Faulty indoor power PCB
- Broken harness
- Faulty indoor control PCB

5. Troubleshooting

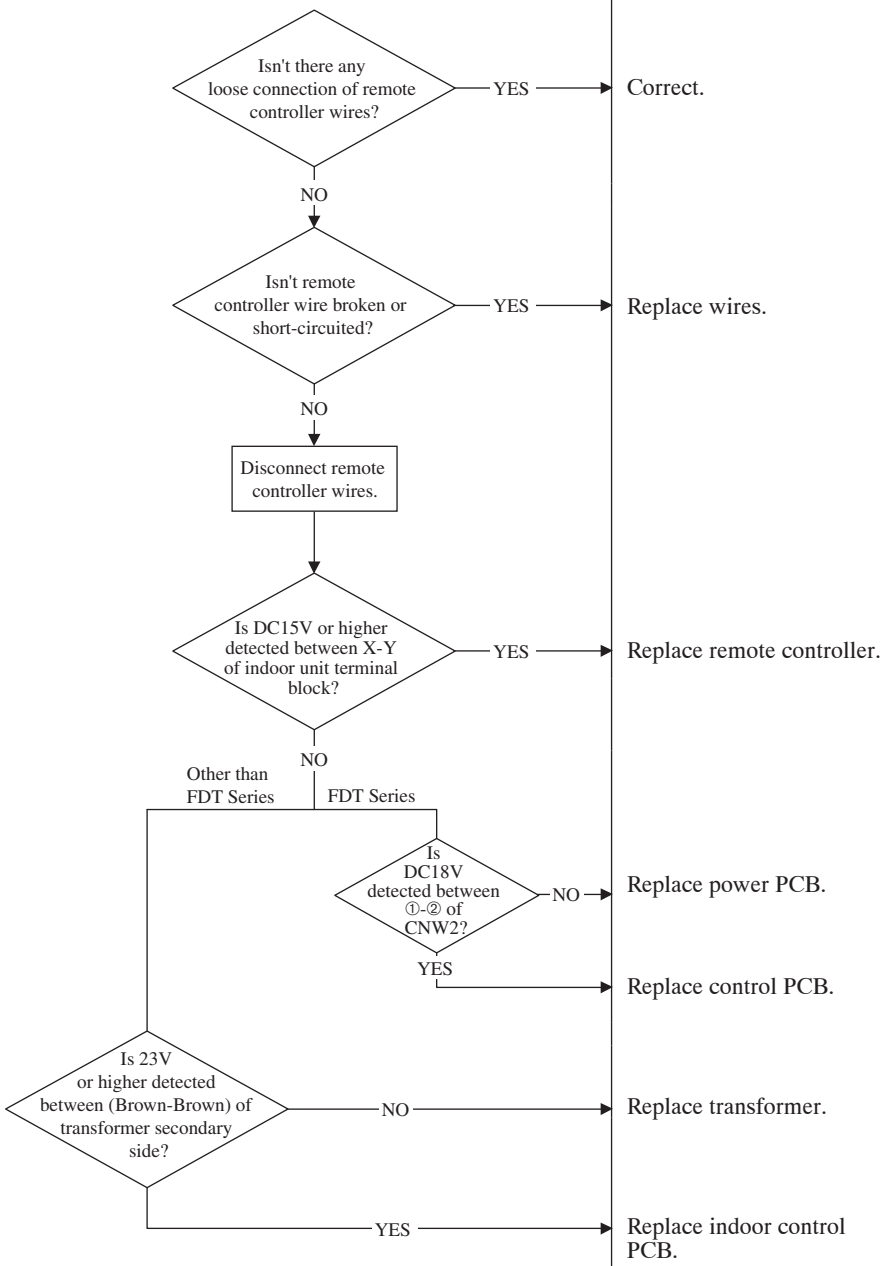

Note:

Error code	LED	Green	Red	Content
Remote controller: WAIT M 7-segment display:	Indoor	Keeps flashing	Stays Off	WAIT Master unit
	Outdoor	Keeps flashing	Stays Off	

1. Applicable model

2. Error detection method

3. Condition of error displayed

4. Presumable cause

- Faulty wiring of superlink signal wires
- Faulty indoor PCB

5. Troubleshooting

Diagnosis	Countermeasure

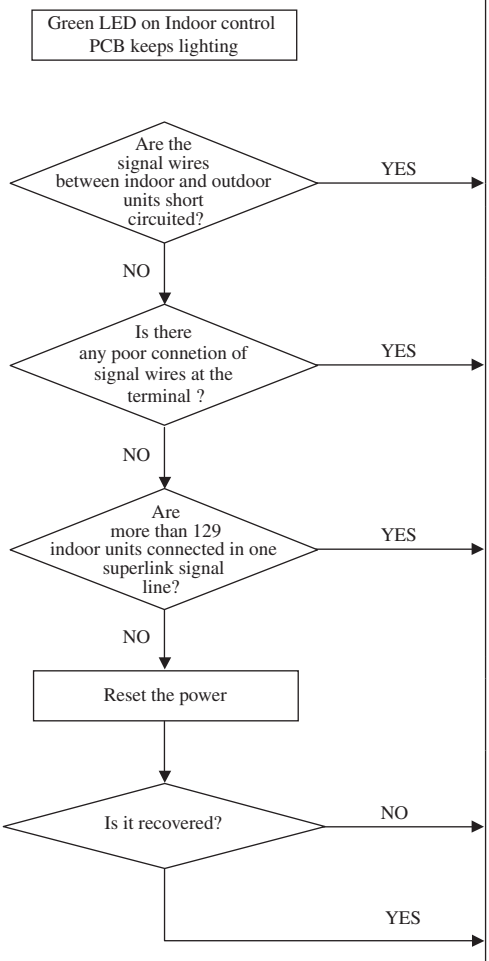

Note:

Error code	LED	Green	Red	Content
Remote controller: ✋WAIT✋	Indoor	Keeps flashing	Stays Off	✋WAIT✋ (1)
7-segment display:	Outdoor	Keeps flashing	Stays Off	

1. Applicable model

2. Error detection method

3. Condition of error displayed

4. Presumable cause

- Faulty setting of remotr controller
- Mistake in auto address setting procedure
- Faulty wiring
- Faulty indoor PCB
- Faulty remote controller

5. Troubleshooting

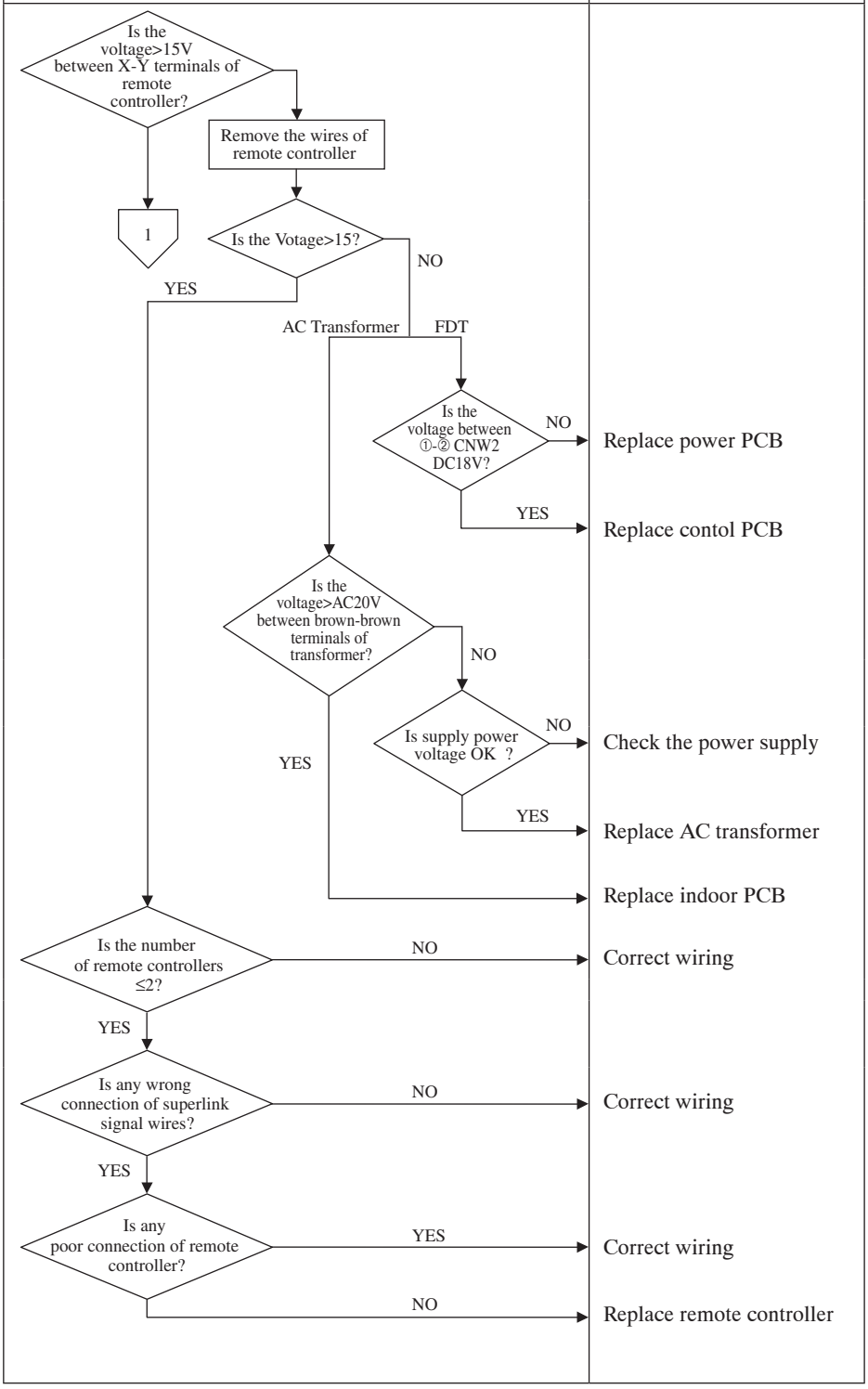

Note:

Error code	LED	Green	Red	Content
Remote controller: WAIT 7-segment display:	Indoor	Keeps flashing	Stays Off	WAIT (2)
	Outdoor	Keeps flashing	Stays Off	

1. Applicable model

2. Error detection method

3. Condition of error displayed

4. Presumable cause

5. Troubleshooting

Diagnosis	Countermeasure

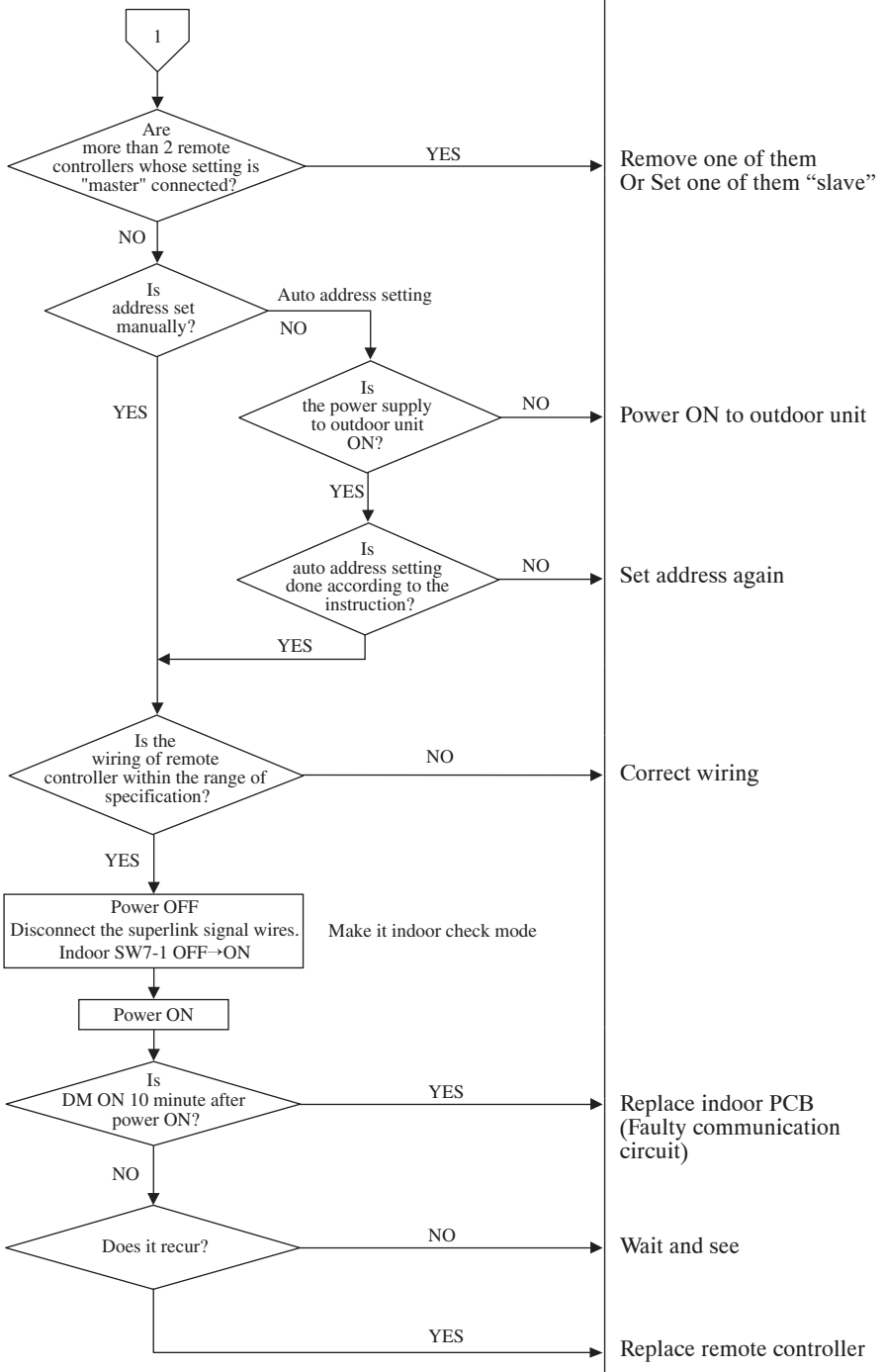

Note:

Error code	LED	Green	Red	Content
Remote controller: [No display] 7-segment display:	Indoor	Keeps flashing	Stays Off	[No display]
	Outdoor	Keeps flashing	Stays Off	

1. Applicable model

2. Error detection method

3. Condition of error displayed

4. Presumable cause

5. Troubleshooting

Diagnosis	Countermeasure

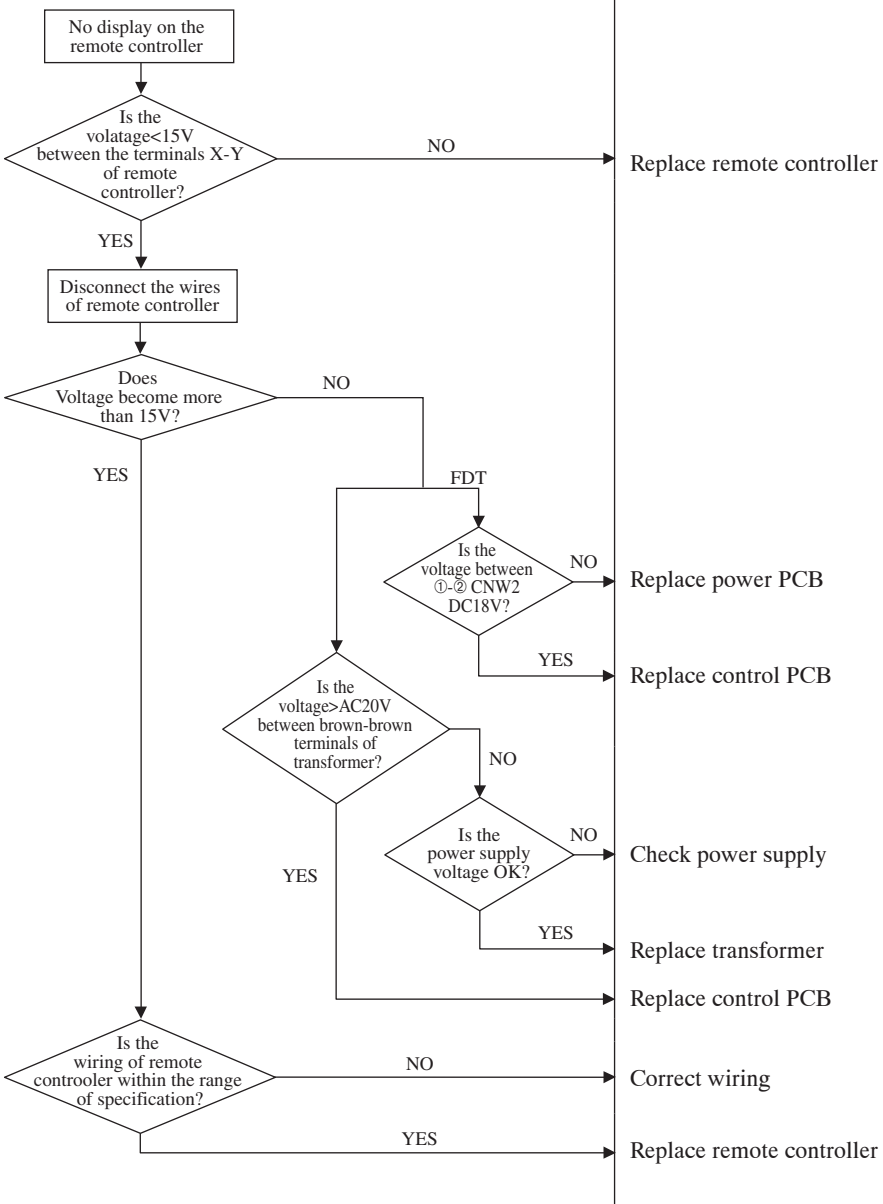

Note:

Error code	LED	Green	Red	Content
Remote controller: E1 7-segment display:	Indoor	Keeps flashing	Stays Off	Remote controller communication error
	Outdoor	Keeps flashing	Stays Off	

1. Applicable model

All models

2. Error detection method

When normal communication is interrupted for more than 2 minutes between the remote controller and the indoor unit (Detectable only with the remote controller)

3. Condition of error displayed

Same as above

4. Presumable cause

- Defective communication circuit between remote controller-indoor unit
- Noise

5. Troubleshooting

Diagnosis	Countermeasure
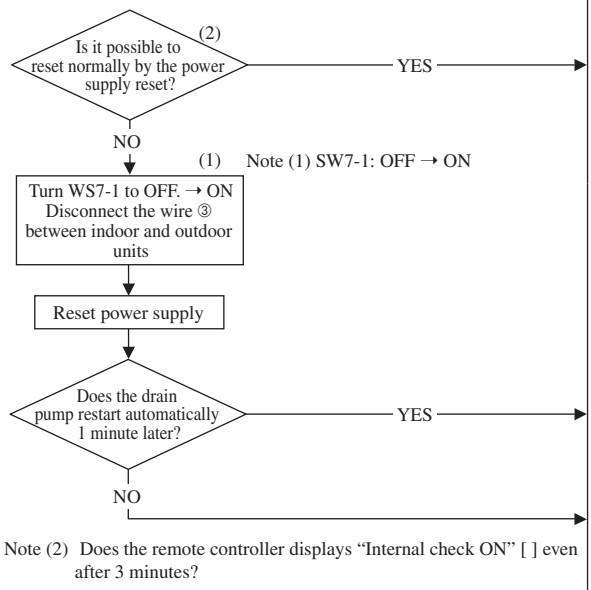	

Note: If the indoor unit cannot communicate normally with the remote controller for 180 seconds, the indoor unit PCB starts to reset automatically.

Error code	LED	Green	Red	Content
Remote controller: E2 7-segment display: -	Indoor	Keeps flashing	Keeps flashing	Duplicated indoor unit address
	Outdoor	Keeps flashing	Stays Off	

1. Applicable model

All models

2. Error detection method

More than 129 indoor units are connected in the same superlink system.
Duplicated indoor unit address

3. Condition of error displayed

Same as above

4. Presumable cause

① Number of connected indoor units exceeds the limitation.
② Duplicated indoor unit address
③ Defective indoor control PCB

5. Troubleshooting

Diagnosis	Countermeasure
Is the number of connected indoor units up to 128 units? — NO →	Review number of connected units.
YES ↓	
Is a different address No. assigned to each indoor unit? — NO →	Correct indoor unit address setting.
YES ↓	
Reset the power supply and restart.	
Caution: Unless the power supply is reset, addresses will not be confirmed.	
Is E2 displayed? — NO →	Implement test run.
YES →	Replace indoor control PCB. * * Before replacement, please confirm whether the rotary switch for address setting is not damaged. (It was experienced that No. 5 on rotary switch was not recognized.)

Note:

Error code	LED	Green	Red	Content
Remote controller: E3/5 7-segment display: -	Indoor	Keeps flashing	2 times flash	Outdoor unit signal line error
	Outdoor	Keeps flashing	Stays Off	

1. Applicable model

All models

2. Error detection method

No outdoor unit exists in the same superlink system line.

3. Condition of error displayed

Same as above

4. Presumable cause

① Power to the indoor unit is not turned on.
② Unmatch of pairing or pairing mismatch between indoor/ outdoor units
③ Defective indoor control PCB
④ Defective outdoor control PCB
⑤ Missing local wiring

5. Troubleshooting

Diagnosis	Countermeasure

E3 is a communication error that occurs when communication is not established at all between indoor/outdoor units. Once the communication is established between indoor/outdoor units, it changes to E5.
In both cases, check signal line wired locally.

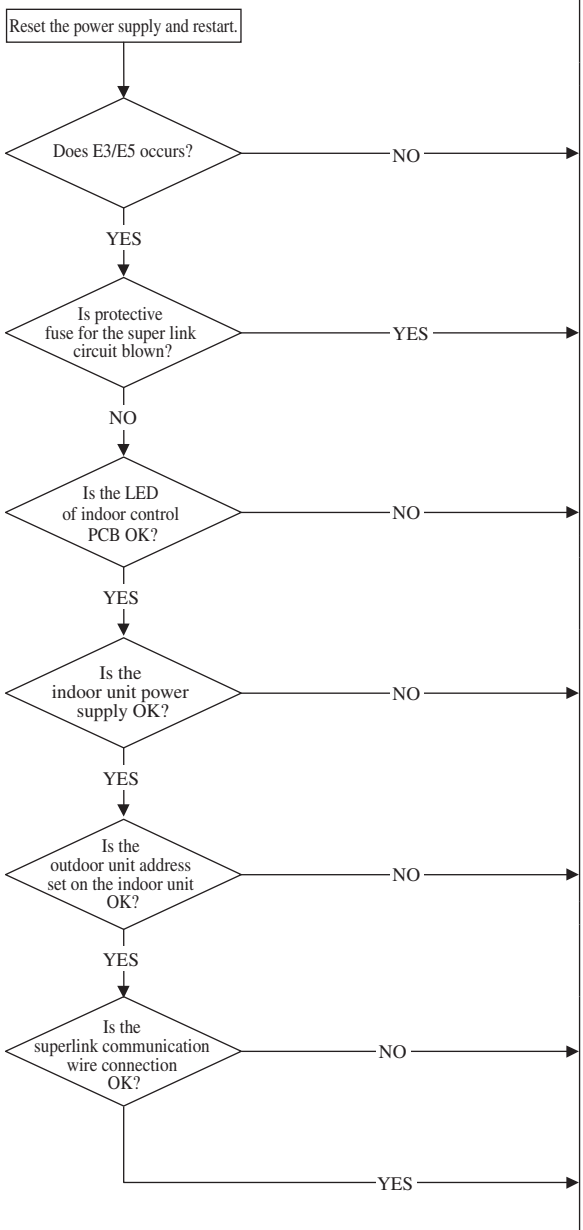

Note:

Error code	LED	Green	Red	Content
Remote controller: E5 7-segment display:	Indoor	Keeps flashing	*See below	Communication error during operation
	Outdoor	Keeps flashing	Stays Off	

1. Applicable model

All models

2. Error detection method

When the communication between indoor-outdoor units is disable for more than 2 minutes

3. Condition of error displayed

When it detects the above during operation.

4. Presumable cause

- Unit address No. setting error
- Controller wire disconnection
- Faulty remote controller wire connection
- Defective indoor control PCB

5. Troubleshooting

Diagnosis	Countermeasure
* In case of 2 times flash on indoor red LED	
Note (1) Check faulty connections (disconnection, looseness) on the outdoor unit terminal block. Is the connection of signal wires at the outdoor unit side OK? — NO →	Repair signal wires.
YES ↓	
Note (2) Check faulty connection or breakage of signal wires between indoor-outdoor units. Is the connection of signal wires between indoor-outdoor units OK? — NO →	Repair signal wires.
YES ↓	
Power supply reset ↓	
Does the remote controller LCD return to normal? — NO →	To the diagnosis of "Checking indoor unit"
YES →	Unit is normal. (Malfunction by temporary noise, etc.)
* In case that indoor red LED stays OFF	
Power supply reset ↓	
Does the remote controller LCD return to normal? — NO →	Defective outdoor control PCB (Defective network communication circuit) → Replace.
YES →	Unit is normal. (Malfunction by temporary noise, etc.)

Note: If the pump down switch is pressed, communication between indoor-outdoor is cancelled and "Communication error E5" is displayed on the remote controller but this is normal.

Error code	LED	Green	Red	Content
Remote controller: E6 7-segment display:	Indoor	Keeps flashing	1 time flash	Indoor heat exchanger temperature thermistor anomaly
	Outdoor	Keeps flashing	Stays Off	

1. Applicable model

All models

2. Error detection method

Anomalously low temperature or high temperature (resistance) is detected by the indoor heat exchanger thermistor (Thi-R1, R2 or R3).

3. Condition of error displayed

- When the temperature thermistor detects -50° C or lower for 5 seconds continuously, the compressor stops. After 3-minutes delay, the compressor starts again automatically, but if this anomaly occurs again within 60 minutes after the initial detection.
- Or if 70°C or higher is detected for 5 seconds continuously.

4. Presumable cause

- Defective indoor heat exchanger thermistor connector
- Defective indoor heat exchanger thermistor
- Faulty indoor control PCB

5. Troubleshooting

Diagnosis	Countermeasure
Is the connection of indoor heat exchanger temperature thermistor connector OK? → NO	Correct. → Connect connector.
YES → Are the characteristics of indoor heat exchanger temperature thermistor OK? → NO	Defective indoor heat exchanger temperature thermistor → Replace.
YES	Defective indoor control PCB → Replace. (Defective indoor heat exchanger temperature thermistor input circuit)

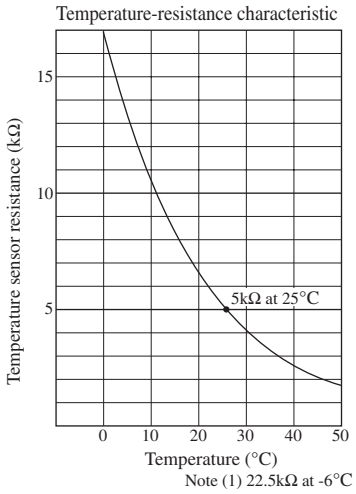

Note:

Error code	LED	Green	Red	Content
Remote controller: E7 7-segment display:	Indoor	Keeps flashing	1 time flash	Intake air temperature thermistor anomaly
	Outdoor	Keeps flashing	Stays Off	

1. Applicable model

All models

2. Error detection method

Anomalously low temperature or high temperature (resistance) is detected by indoor intake air temperature thermistor (Thi-A)

3. Condition of error displayed

- When the temperature sensor detects -50°C or lower for 5 seconds continuously, the compressor stops. After 3-minute delay, the compressor starts again automatically, but if this anomaly occurs again within 60 minutes after the initial detection.
- Or if 48°C or higher is detected for 5 seconds continuously.

4. Presumable cause

- Defective intake air temperature thermistor connector
- Defective intake air temperature thermistor
- Faulty indoor control PCB

5. Troubleshooting

Diagnosis	Countermeasure
Is the connection of intake air temperature sensor connector OK? → NO	Correct. → Connect connector.
YES → Are the characteristics of intake air temperature sensor OK? → NO	Defective intake air temperature thermistor → Replace.
YES	Defective indoor control PCB → Replace. (Defective intake air temperature thermistor input circuit)

Temperature-resistance characteristic

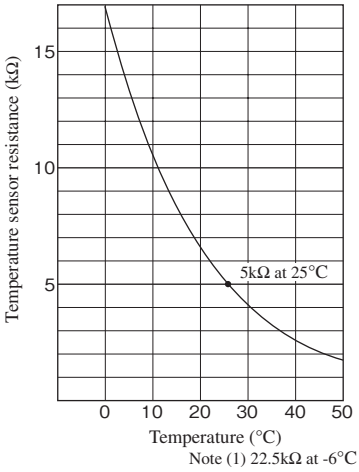

Note (1) 22.5kΩ at -6°C

Note:

Error code	LED	Green	Red	Content
Remote controller: E9 7-segment display:	Indoor	Keeps flashing	1 time flash	Drain trouble
	Outdoor	Keeps flashing	Stays Off	

1. Applicable model

FDT, FDTC, FDTW, FDTQ, FDTS, FDR, FDU, FDUM, FDTQS and FDU---F series

2. Error detection method

Float switch is activated

3. Condition of error displayed

If the float switch OPEN is detected for 3 seconds continuously or if float switch connector or wire is disconnected.

4. Presumable cause

Defective indoor control PCB
- Float switch setting error
- Humidifier Drain Motor interlock setting error
- Optional equipment setting error
- Drain piping error
- Defective drain motor
- Disconnection of drain motor wiring

5. Troubleshooting

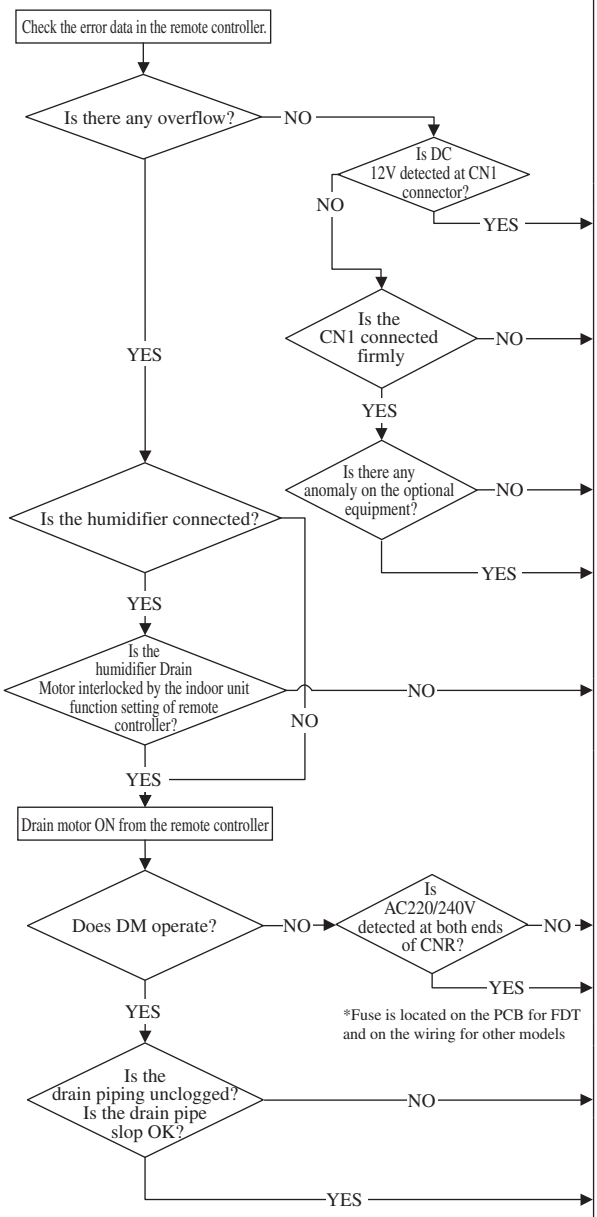

Note: When this error occurred at power ON, disconnection of wire or connector of the float switch is suspected. Check and correct it (or replace it, if necessary).

Error code	LED	Green	Red	Content
Remote controller: E10 7-segment display:	Indoor	Keeps flashing	Stays Off	Excessive number of indoor units (moe than 17 units) by controlling with one remoto controller
	Outdoor	Keeps flashing	Stays Off	

1. Applicable model

All models

2. Error detection method

When it detects more than 17 of indoor units connected to one remote contorller

3. Condition of error displayed

Same as above

4. Presumable cause

- Excessive number of connected units
- Defective remote controller

5. Troubleshooting

Diagnosis	Countermeasure
Aren't more than 17 indoor units connected to one remote controller? → NO	Defective remote controller → Replace.
Aren't more than 17 indoor units connected to one remote controller? → YES	Reduce to 16 or less units.

Note:

Error code	LED	Green	Red	Content
Remote controller: E12 7-segment display: -	Indoor	Keeps flashing	1 time flash	Address setting error by mixed setting method
	Outdoor	Keeps flashing	Stays Off	

1. Applicable model

All models

2. Error detection method

Auto (remote controller) setting and manual setting are mixed in the address setting method for indoor units

3. Condition of error displayed

Same as above

4. Presumable cause

Mistake in address setting for indoor unit

5. Troubleshooting

Diagnosis	Countermeasure
Isn't the auto setting and the manual setting mixed in the address setting method for indoor units? → YES	Review address setting.
Isn't the auto setting and the manual setting mixed in the address setting method for indoor units? → NO	Replace indoor control PCB.

Address setting method list (Figures in [ ] are for old superlink models)

		Models for new superlink protocol			Models for old superlink protocol		
		Indoor unit address setting		Outdoor unit address setting	Indoor unit address setting		Outdoor unit address setting
		Indoor unit No. SW	Outdoor unit No. SW	Outdoor unit No. SW	Indoor unit No. SW	Outdoor unit No. SW	Outdoor unit No. SW
Manual address setting	(New SL)	000-127	00-31	00-31	00-47	00-47	00-47
	(Old SL)	[00-47]	[00-47]	[00-47]			
Auto address setting for single refrgerant system	(New SL) / (Old SL)	000	49	49	49	49	49
Auto address setting for multiple refrgerant systems	(New SL)	000	49	00-31	Not available		
	(Old SL)	Not available					

Note:

Error code	LED	Green	Red	Content
Remote controller: E16 7-segment display:	Indoor	Keeps flashing	1 time flash	Indoor fan motor anomaly (In case of FDT)
	Outdoor	Keeps flashing	Stays Off	

1. Applicable model

FDT type

2. Error detection method

Detected by revolution speed of indoor fan motor

3. Condition of error displayed

When actual revolution speed of indoor fan motor drops to lower than 200rpm for 30 minutes continuously, the compressor and the indoor fan motor stop. After 2-seconds delay, it starts again automatically, but if this anomaly occurs 4 times within 60 minutes after the initial detection.

4. Presumable cause

- Defective indoor power PCB
- Foreign material at rotational area of fan propeller
- Defective fan motor
- Dust on control PCB
- Blown fuse
- External noise, surge

5. Troubleshooting

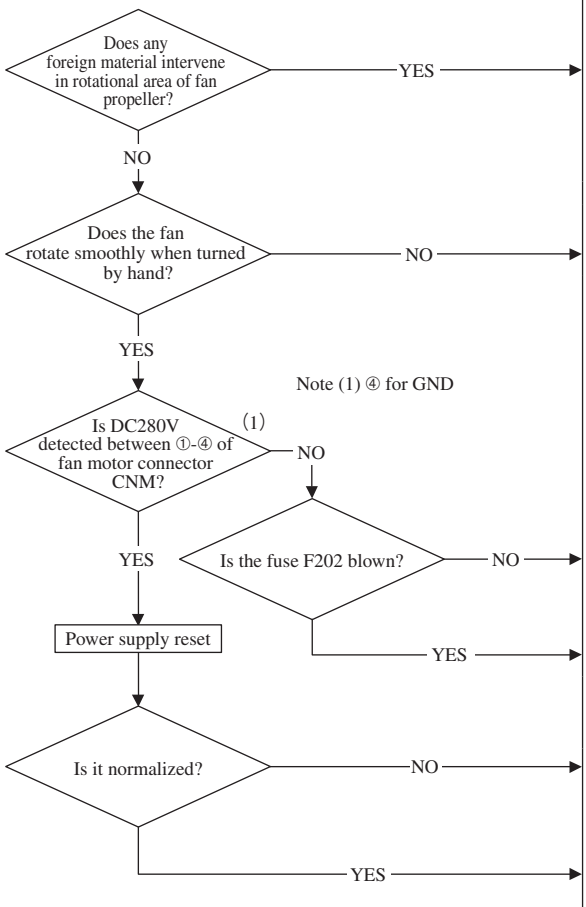

Note:

Error code	LED	Green	Red	Content
Remote controller: E16 7-segment display:	Indoor	Keeps flashing	1 time flash	Indoor fan motor anomaly (In case of FDK)
	Outdoor	Keeps flashing	Stays Off	

1. Applicable model

FDK type

2. Error detection method

Detected by revolution speed of indoor fan motor

3. Condition of error displayed

When actual revolution speed of indoor fan motor drops to lower than 200rpm for 30 minutes continuously, the compressor and the indoor fan motor stop. After 2-seconds delay, it starts again automatically, but if this anomaly occurs 4 times within 60 minutes after the initial detection.

4. Presumable cause

- Defective indoor power PCB
- Foreign material at rotational area of fan impeller
- Defective fan motor
- Dust on control PCB
- Blown fuse
- External noise, surge

5. Troubleshooting

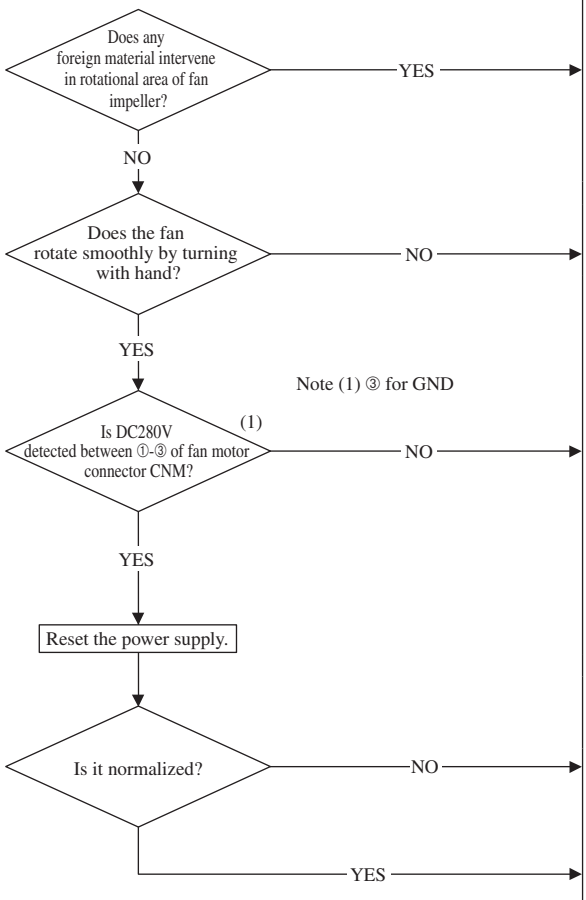

Note:

Error code	LED	Green	Red	Content
Remote controller: E19 7-segment display:	Indoor	Keeps flashing	1 time flash	Indoor unit operation check, drain motor check setting error
	Outdoor	Keeps flashing	Stays Off	

1. Applicable model

All models

2. Error detection method

After indoor operation check, when the communication between indoor and outdoor unit is established and SW7-1 is still kept ON.

3. Condition of error displayed

Same as above

4. Presumable cause

Mistake in SW7-1 setting
Due to forgetting to turn OFF SW7-1 after indoor operation check)

5. Troubleshooting

Diagnosis	Countermeasure
E19 occurs when the power ON → Is SW7-1 on the indoor control PCB ON?	
NO →	Defective indoor control PCB (Defective SW7) →Replace
YES →	Turn SW7-1 on the indoor control PCB OFF and reset the power

Note: Indoor operation check/drain pump check mode
If the power is ON after SW7-1ON, indoor operation check/drain pump check mode can be established.
1) When the communication between remote controller and indoor PCB is established 15 seconds after power ON, it goes to indoor operation check.
2) When the communication between remote controller and indoor PCB is not established, it goes to drain pump check (CnB connector should be open before power ON)

Error code	LED	Green	Red	Content
Remote controller: E28 7-segment display:	Indoor	Keeps flashing	Stays Off	Remote controller temperature thermistor anomaly
	Outdoor	Keeps flashing	Stays Off	

1. Applicable model

All models

2. Error detection method

Detection of anomalously low temperature (resistance) of remote controller temperature thermistor (Thc)

3. Condition of error displayed

- When the temperature thermistor detects -50° C or lower for 5 seconds continuously, the compressor stops. After 3-minutes delay, the compressor starts again automatically, but if this anomaly occurs again within 60 minutes after the initial detection.

4. Presumable cause

- Faulty connection of remote controller temperature thermistor
- Defective remote controller temperature thermistor
- Defective remote controller PCB

5. Troubleshooting

Diagnosis	Countermeasure
Is the remote controller temperature thermistor connected properly? → NO	Correct.
YES → Are the characteristics of remote controller temperature thermistor OK? Is the sensor wire OK? → NO	Defective remote controller temperature thermistor → Replace.
YES	Defective remote controller PCB → Replace. (Defective remote controller temperature thermistor input circuit)

Resistance-temperature characteristics of remote controller temperature sensor (ThC)

Temperature (°C)	Resistance value (kΩ)	Temperature (°C)	Resistance value (kΩ)	Temperature (°C)	Resistance value (kΩ)	Temperature (°C)	Resistance value (kΩ)
-30	88.05	-2	18.11	26	4.786	54	1.542
-29	82.81	-1	17.20	27	4.582	55	1.486
-28	77.90	0	16.33	28	4.388	56	1.432
-27	73.32	1	15.52	29	4.203	57	1.380
-26	69.03	2	14.76	30	4.027	58	1.330
-25	65.02	3	14.03	31	3.859	59	1.283
-24	61.27	4	13.35	32	3.699	60	1.237
-23	57.75	5	12.70	33	3.546	61	1.193
-22	54.46	6	12.09	34	3.401	62	1.151
-21	51.37	7	11.51	35	3.262	63	1.111
-20	48.48	8	10.97	36	3.130	64	1.072
-19	45.77	9	10.45	37	3.004	65	1.035
-18	43.22	10	9.956	38	2.883	66	0.9991
-17	40.83	11	9.490	39	2.768	67	0.9648
-16	38.59	12	9.050	40	2.658	68	0.9318
-15	36.48	13	8.632	41	2.553	69	0.9001
-14	34.50	14	8.235	42	2.453	70	0.8697
-13	32.63	15	7.860	43	2.357	71	0.8404
-12	30.88	16	7.503	44	2.266	72	0.8122
-11	29.23	17	7.164	45	2.178	73	0.7852
-10	27.68	18	6.843	46	2.094	74	0.7591
-9	26.22	19	6.538	47	2.014	75	0.7341
-8	24.85	20	6.248	48	1.938	76	0.7100
-7	23.55	21	5.973	49	1.864	77	0.6868
-6	22.33	22	5.711	50	1.794	78	0.6645
-5	21.18	23	5.462	51	1.727	79	0.6430
-4	20.10	24	5.225	52	1.663	80	0.6223
-3	19.07	25	5.000	53	1.601	81	0.6024

Note: After 10 seconds has passed since remote controller thermistor was switched from valid to invalid, E28 will not be displayed even if the thermistor harness is disconnected. At same time the thermistor is switched from remote controller thermistor to indoor intake air temperature thermistor.
Even though the remote controller thermistor is set to be Valid, the intake air temperature displayed on remote controller for checking still shows the value detected by indoor intake air temperature thermistor, not by remote controller thermistor.

Error code	LED	Green	Red	Content
Remote controller: E30 7-segment display: E30	Indoor	Keeps flashing	Stays Off	Unmatch connection of indoor and outdoor unit
	Outdoor	Keeps flashing	1 time flash	

1. Applicable model

KXE6 multi outdoor unit

2. Error detection method

3. Condition of error displayed

4. Presumable cause

- Faulty indoor control PCB
- Faulty outdoor control PCB

5. Troubleshooting

Diagnosis	Countermeasure
Is the signal wire connection between indoorand outdoor units correctly ? — NO →	Correct signal wiring
YES ↓	
Is the voltage between L1-N, L2-N and L3-N for 3-phase model and L1-N for 1-phase model at terminal brock of outdoor unit 220/240V? — NO →	Replace outdoor control PCB
YES ↓	
Is the voltage between L1-N at terminal block of indoor unit 220/240V? — NO →	Disconnection of wire for power line → Correct it
YES →	Replace indoor control PCB

Note:

Error code	LED	Green	Red	Content
Remote controller: E31 7-segment display: E31	Indoor	Keeps flashing	Stays Off	Duplicated outdoor unit address No.
	Outdoor	Keeps flashing	1 time flash	

1. Applicable model

KXE6 multi outdoor unit

2. Error detection method

When it finds any duplicated address No. exsisted in the same superlink system by scanning the address No. set for each outdoor unit with microcomputer.

3. Condition of error displayed

When duplicated outdoor unit address No. exists in the same superlink system.

4. Presumable cause

- Mistake in the address setting of outdoor units
- More than 129 indoor units connected
  [Maximum number of setting address SW is for 128 units]
- No setting of Master/Slave selection SW for combination use

5. Troubleshooting

Diagnosis	Countermeasure
Save data for 30 minutes before stopping in Mente PC	Check and save the data of operating condition. Check the conditions whether it occurs immediately after the power on or during operation. Check the address Nos. of outdoor units commected in same superlink system
Reset the power and restart operation.	Caution: Address will not be confirmed, unless the power is reset after changing addess.
Does it recur? Is E31 displayed? — NO →	During test run. No action is taken by judging that the power reset was not done after changing address.
YES ↓ Check outdoor unit address Nos. in the same superlink system	Caution: Address No. of outdoor unit with new superlink specification should be set 00-31
Does the same address No. exist? — YES →	Correct address.
NO →	Replace outdoor control PCB. * * Before replacement, please confirm whether the rotary switch for address setting is not damaged. (It was experienced that No. 5 on rotary switch was not recognized.)

Note: After the above procedure, confirm no error diplay occurs.
Address will not be confirmed unless the power is reset.
In case of combination use, set the same address to both master and slave units. Distinction of master or slave unit is done by setting of SW4-7. (refer the instruction manual and technical manual in detail)

Error code	LED	Green	Red	Content
Remote controller: E32 7-segment display: E32	Indoor	Keeps flashing	Stays Off	Open L3 Phase on power supply at primary side
	Outdoor	Keeps flashing	1 time flash	

1. Applicable model

KXE6 multi outdoor unit

2. Error detection method

By Checking the power supply voltage at input side of the outdoor control PCB

3. Condition of error displayed

When the voltage between L1-N and L2-N become 0V and/or the current of L3 decrease (0 Ampere)

4. Presumable cause

- Faulty power supply at primary side
- Anomalous outdoor control PCB

5. Troubleshooting

Diagnosis	Countermeasure
Save data for 30 minutes before stopping in Mente PC	Check and save the data of operating condition. Check the conditions whether it occurs immediately after the power on or during operation or stopping. (It will be convenient to persuade the customer why an improvement of power supply is required by showing these data)
Check the power supply voltage (between phases) at the primary side. — NO →	Propose an improvement to the customer.
Reset the power.	Restart operation and check it, as much as possible, under the operating conditions for 30 minutes before error occurred.
Is E32 displayed? — YES →	Replace outdoor control PCB.
NO →	Wait and see without taking any action.

Note:

Error code	LED	Green	Red	Content
Remote controller: E36 7-segment display: E36-1	Indoor	Keeps flashing	Stays Off	Discharge pipe temperature error (Tho-D1)
	Outdoor	Keeps flashing	1 time flash	

1. Applicable model

KXE6 multi outdoor unit

2. Error detection method

Detection of anomalously high temperature by the discharge pipe temperature thermistor

3. Condition of error displayed

When the discharge pipe temperature thermistor detects 115°C or higher the compressor stops. After 3-minutes delay, the compressor starts again automatically, but if this anomaly occurs 5 times within 60 minutes after the initial detection.

4. Presumable cause

- Defective discharge pipe temperature thermistor
- Defective outdoor control PCB
- Insufficient amount of refrigerant
- Insufficient airflow volume
- Short-circuit

5. Troubleshooting

Diagnosis	Countermeasure
Save data for 30 minutes before stopping in Mente PC	Check and save the data of operating condition Check the ROM version Confirmation of SV1 operation
Is the unit installation environment within the range of limitation? — NO	Propose an improvement to the customer.
YES	
Are the refrigerant amount and piping length OK? — NO	Adjust the refrigerant amount poperly (Check whether the refrigerant amount is insufficient or not.) (Check the gas leakage)
YES	
Is the thermistor connector inserted to the PCB connector properly? — NO	Insert connectors securely.
YES	
Is the discharge pipe temperature thermistor normal? — NO	Check if characteristics are correct, referring to the characteristics list of E39. (Page 350) . And if necessary, replace the discharge pipe temperature thermistor.
YES	
Reset the power and restart operation.	Check it, as much as possible, under the operating conditions for 30 minutes before error occurred.
Does it recur after restarting operation? — NO	Wait and see. Continue to obtain data, if possible. (Keep connecting the Mente PC)
YES	Check refrigerant amount again.

Note:

Error code	LED	Green	Red	Content
Remote controller: E36 7-segment display: E36-3	Indoor	Keeps flashing	Stays Off	Liqiud flooding anomaly
	Outdoor	Keeps flashing	3 times flash	

1. Applicable model

KXE6 multi outdoor units

2. Error detection method

When it detects that the overheat temperature of discharge pipe decreased

3. Condition of error displayed

If the overheat temperature of discharge pipe is detected 5degC or lower for 10 minute continuously.
If the compressor stop is detected 3 times within 60 minutes

4. Presumable cause

- Faulty discharge pipe temperature thermistor
- Faulty high pressure thermistor
- Faulty connection signal wires between indoor and outdoor units
- Excessive refrigerant amount
- Faulty indoor EEV
- Faulty indoor heat exchanger temperature thermistor
- Faulty outdoor EEVH
- Faulty suction pipe temperature thermistor or faulty low pressure thermistor
- Falty outdoor EEVSC
- Faulty Tho-H temperature thermistor
- Piping length is out of limitation range

5. Troubleshooting

Diagnosis	Countermeasure
Save data for 30 minutes before stopping in Mente PC	Check and save the data of operating condition Check ROM version Check operation of SV1, SV2
Is the unit installation environment within the range of limitation? — NO	Propose the client to improve
YES	
Is the refrigerant amount and piping length OK? — NO	Adjust refrigerant amount properly (Check whether the charged amount is excess) If the piping length is less than 5m, calculate the correct charging amount and reduce excessive refrigerant amount
YES	
Is the connected number of indoor units checked by Mente PC same as that mentioned in utility drawing? — NO	Connect the signal wires between indoor and outdoor units securely.
YES	
Is insertion of the thermistor connector into the connector on outddoor control PCB OK? — NO	Insert the connector securely
YES	
Is the temperature thermistors of discharge pipe, suction pipe, Tho-H and indoor heat exchanger OK? Is high pressure thermistor OK? — NO	Replace the thermistor after checking whether the thermistor characteristics is OK ot not.
YES	
Reset the power and restart	Restart operation and check it, as much as possible, under the operating conditions for 30 minutes before error occurred.
After restarting, does it recur? — NO	Wait and see If possible, continue to collect data (Keep connecting Mente PC)
YES	
Is the operation of indoor EEV OK ? (at cooling) Is the operation of outdoor EEVH OK? (at heating) Is the operation of outdoor EEVSC OK? (at heating and cooling) — NO	Replace EEV coil or EEV main body.
YES	Check refrigerant amount again

Note:

Error code	LED	Green	Red	Content
Remote controller: E37 7-segment display: E37-1, 2, 5, 6*1	Indoor	Keeps flashing	Stays Off	Outdoor heat exchanger and subcooing coil temperature thermistor anomaly
	Outdoor	Keeps flashing	*1	

*1 Tho-R1: one time flash (E37-1), Tho-R2: two times flash (E37-2), Tho-SC: 5 times flash (E37-5), Tho-H: 6times flash (E37-6)

1. Applicable model

KXE6 multi outdoor unit

2. Error detection method

Detection of anomalously low temperatures (resistance) by the outdoor unit heat exchanger thermistor and the sub-cooling coil thermistor

3. Condition of error displayed

- If -50°C is detected for 5 seconds within 2-minutes to 2-minutes 20-seconds after the compressor ON and if this anomaly occurs 3 times within 40 minutes after the initial detection.
- If this anomaly occurs 1 time within 20 seconds after power ON.

4. Presumable cause

- Disconnection of the thermistor harness or the internal wire of sensing part (Check the molded part)
- Disconnection of the thermistor connector
- Defective outdoor control PCB

5. Troubleshooting

Diagnosis	Countermeasure
Save data for 30 minutes before stopping in Mente PC	Check and save the data of operating condition. Check the conditions whether it occurs immediately after the power on or during operation or stopping. Check the sensed value. Compare the temperature on Mente PC with actual measured value.
Is the connector of faulty thermistor connected properly? — NO →	Insert the connector firmly
YES ↓ Are the characteristics of thermistor OK?*2 — NO →	Replace thermistor.
YES →	Replace outdoor control PCB.

*2
Check several times the temperature-resistance characteristics of thermistor to prove any poor connection.
Thermistor temperature-resistance characteristics

Outdoor heat exchanger temperature thermistor (Tho-R1, R2)
Sub-cooling coil thermistor (Tho-SC, Tho-H)
Temperature-resistance characteristics

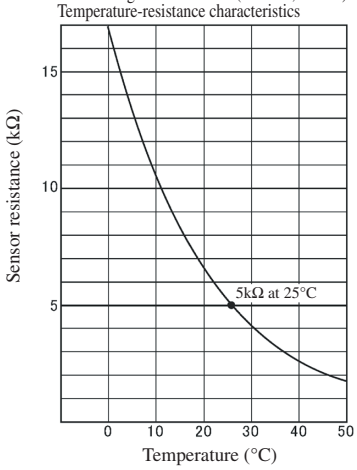

Note:

Error code	LED	Green	Red	Content
Remote controller: E38 7-segment display: E38	Indoor	Keeps flashing	Stays Off	Ambient air temperature thermistor anomaly (Tho-A)
	Outdoor	Keeps flashing	1 time flash	

1. Applicable model

KXE6 multi outdoor unit

2. Error detection method

Detection of anomalously low temperature (resistance) by ambient air temperature thermistor

3. Condition of error displayed

- if -30°C is detected for 5 seconds within 2-minutes to 2-minutes 20-seconds after the compressor ON and if this anomaly occurs 3 times within 40 minutes after the initial detection.
- If this anomaly occurs 1 time within 20 seconds after power ON.

4. Presumable cause

- Disconnection of the thermistor harness or the internal wire of sensing part (Check the molded part)
- Disconnection of the thermistor connector
- Defective outdoor control PCB

5. Troubleshooting

Diagnosis	Countermeasure
Save data for 30 minutes before stopping in Mente PC	Check and save the data of operating condition. Check the conditions whether it occurs immediately after the power on or during operation or stopping. Check the sensed value. Compare the temperature on Mente PC with actual measured value.
Is the connector of faulty thermistor connected properly? — NO →	Insert the connector firmly
YES ↓ Are the characteristics of thermistor OK?*1 — NO →	Replace ambient air temperature thermistor (Tho-A).
YES →	Replace outdoor control PCB.

*1
Check several times the temperature-resistance characteristics of thermistor to prove any poor connection.
Thermistor temperature-resistance characteristics

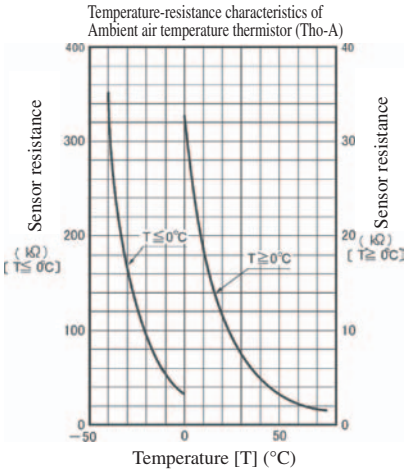

Note:

Error code	LED	Green	Red	Content
Remote controller: E39 7-segment display: E39-1	Indoor	Keeps flashing	Stays Off	Discharge pipe temperature thermistor anomaly (Tho-D1)
	Outdoor	Keeps flashing	1 time flash	

1. Applicable model

KXE6 multi outdoor unit

2. Error detection method

Detection of anomalously low temperature (resistance) by discharge pipe temperature thermistor

3. Condition of error displayed

- If 3°C or lower is detected for 5 seconds within 10-minutes to 10-minutes 20-seconds after the compressor ON and if this anomaly occurs 3 times within 40 minutes after the initial detection.

4. Presumable cause

- Disconnection of the thermistor harness or the internal wire of sensing part (Check the molded part)
- Disconnection of wire at joint (connector)
- Disconnection of the thermistor connector

5. Troubleshooting

Diagnosis	Countermeasure
Save data for 30 minutes before stopping in Mente PC	Check and save the data of operating condition. Check the conditions whether it occurs immediately after the power on or during operation or stopping. Check the sensed value. Compare the temperature on Mente PC with actual measured value.
Is the connector of faulty thermistor connected properly? — NO →	Insert the connector firmly
YES ↓ Are the characteristics of thermistor OK? *1 — NO →	Replace discharge pipe temperature thermistor (Tho-D1).
YES →	Replace outdoor control PCB.

*1
Check several times the temperature-resistance characteristics of thermistor to prove any poor connection.
Thermistor tempeature-resistance characteristics

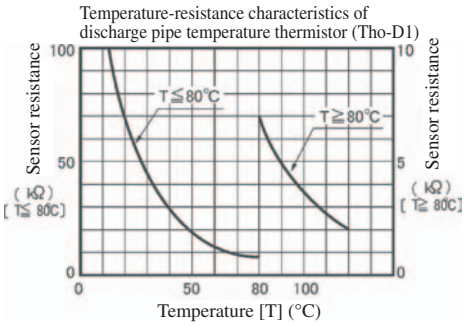

Note:

Error code	LED	Green	Red	Content
Remote controller: E40 7-segment display: E40	Indoor	Keeps flashing	Stays Off	High pressure error (63H1-1 activated)
	Outdoor	Keeps flashing	1 time flash	

1. Applicable model

KXE6 multi outdoor unit

2. Error detection method

High pressure switch 63H1-1 is activated

3. Condition of error displayed

- If high pressure exceeds 4.15MPa
- If 63H1 is activated 5 times within 60 minutes
- If high pressure is kept at 4.15MPa for 60 minutes

4. Presumable cause

- Short circuit at condenser heat exchanger/Disturbance of air flow/Clogging filter/ Breakdown of outdoor fan motor
- Disconnection of high pressure switch connector and/or switch harness
- Closed operation valve
- Defective high pressure sensor

5. Troubleshooting

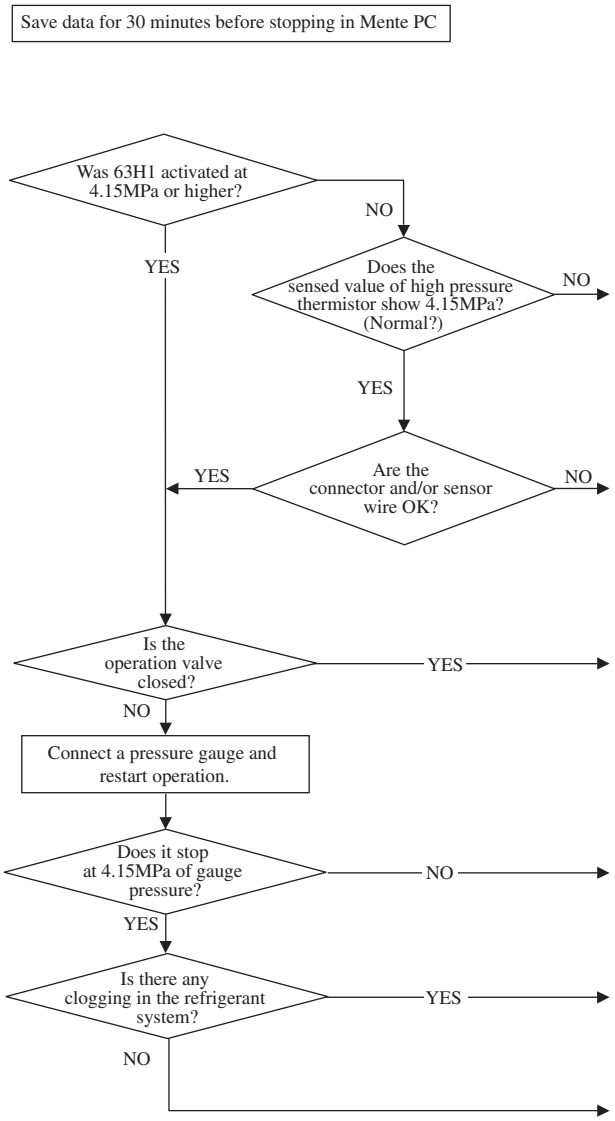

Diagnosis	Countermeasure
Save data for 30 minutes before stopping in Mente PC	Check and save the data of operating condition Check the sensed value of high pressure thermistor when the 63H1 is activated Check whether the high pressure switch is activated at the sensed value of high pressure thermistor.
Was 63H1 activated at 4.15MPa or higher? → NO → Does the sensed value of high pressure thermistor show 4.15MPa? (Normal?) → NO	Failure of high pressure thermistor is suspected. Check high pressure thermistor itself according to the troubleshooting of E54 (P360) (If it is defective, replace high pressure sensor.)
Does the sensed value of high pressure thermistor show 4.15MPa? (Normal?) → YES → Are the connector and/or sensor wire OK? → NO	If the thermistor connector is defective or the thermistor wire is disconnected, correct it. Also check whether the high pressure switch is properly mounted or not.
Was 63H1 activated at 4.15MPa or higher? → YES → Are the connector and/or sensor wire OK? → YES → Is the operation valve closed? → YES	Open operation valve.
Is the operation valve closed? → NO → Connect a pressure gauge and restart operation.	Restart operation and check it, as much as possible, under the operating conditions for 30 minutes before error occurred.
Does it stop at 4.15MPa of gauge pressure? → NO	Replace outdoor control PCB.
Does it stop at 4.15MPa of gauge pressure? → YES → Is there any clogging in the refrigerant system? → YES	Remove clogging.
Is there any clogging in the refrigerant system? → NO	Check items (condenser side): • Clogged filter • Airflow volume (Outdoor fan motor) • Short-circuit

Note: Unless it is reproduced, connect the maintenance PC and continue to collect data.

Error code	LED	Green	Red	Content
Remote controller: E42 7-segment display: E42	Indoor	Keeps flashing	Stays Off	Current cut (1)
	Outdoor	Keeps flashing	1 time flash	

1. Applicable model

FDC112-155KXEN6
FDC112-155KXES6

2. Error detection method

In order to prevent from overcurrent of inverter, if the current exceeds the specifications, it makes the compressor stopping.

3. Condition of error displayed

If the output current of inveter exceeds the specifications, it makes the compressor stopping. After 3-minute delay, the compressor restarts, but if this amonaly occurs 4 times within 30 minute after the intial detection.

4. Presumable cause

- Open the valves
- Faulty power supply
- Insufficient refrigerant amount
- Faulty compressor
- Faulty power transistor module

5. Troubleshooting

Diagnosis	Countermeasure
Is the Power supply voltage OK? — NO →	Check power supply
YES ↓	
Are the operation valves opened? — NO →	Open the valves
YES ↓	
Is the high pressure during operation OK? — NO →	Check refrigerant amount and refregerant circuit *In case of transitional increase of high pressure and/or test run, several times restarting may recover it, because liquid refrigerant in the compresser is discharged from the compressor.
YES ↓	
Is the checked result of insulation resistance and coil resistance (1) of compressor motor OK? — NO →	Replace compressor
(1) 0.4Ω or more at 25°C	
↓ Continue to next pager	

Note:

Error code	LED	Green	Red	Content
Remote controller: E42 7-segment display: E42	Indoor	Keeps flashing	Stays Off	Current cut (2)
	Outdoor	Keeps flashing	1 time flash	

1. Applicable model

FDC112-155KXEN6
FDC112-155KXES6

2. Error detection method

In order to prevent from overcurrent of inverter, if the current exceeds the specifications, it makes the compressor stopping.

3. Condition of error displayed

If the output current of inveter exceeds the specifications, it makes the compressor stopping. After 3-minute delay, the compressor restarts, but if this amonaly occurs 4 times within 30 minute after the intial detection.

4. Presumable cause

- Open the valves
- Faulty power supply
- Insufficient refrigerant amount
- Faulty compressor
- Faulty power transistor module

5. Troubleshooting

Diagnosis	Countermeasure
Continue from previous page ↓ Is the checked result of power transistor module OK? — NO →	Replace inverter PCB
YES ↓ • Is the installation space of indoor and/or outdoor unit enough? • Is there any short circuit of air on indoor and/or outdoor unit? • At cooling, does the outdoor fan motor run? Are the operation valves fully opened? Is the filter clogged? • At heating, does the indoor fan motor run? Are the operation valves fully opened? Is the filter clogged? • Is there any liquid flooding? Is the superheat within normal range? Is the low pressure sensor and suction pipe temperature normal? • Is there any anoumalous sound on the compressor?	
YES ↓ After resetting power for several times does it become normal? — NO →	Replace inverter PCB
YES ↓ Temporary noise may cause of anomaly. If noise source can be found, take countermeasure.	

Note:

Error code	LED	Green	Red	Content
Remote controller: E43 7-segment display: E43-1, 2 *1	Indoor	Keeps flashing	Stays Off	Excessive number of indoor units connected, excessive total capacity of connection
	Outdoor	Keeps flashing	Stays Off*1	

*1 E43-1/1 time flash: Excessive number of indoor units connected, E43-2/2 times flash:Excessive capacity of connection

1. Applicable model

KXE6 multi outdoor unit

2. Error detection method

When the number of connected indoor units exceeds the limitation.
When the total capacity of connected indoor units exceeds the limitation.
(When the total capacity of connected indoor units exceeds 150% of outdoor unit capacity)

3. Condition of error displayed

- Excessive number of connected indoor units
- Excessive total capacity of connected indoor units
- The total capacity of connected indoor units exceeds 150% of outdoor unit capacity

4. Presumable cause

- Mistake in setting of indoor/outdoor unit addresses
- Mistake in signal wire connection

5. Troubleshooting

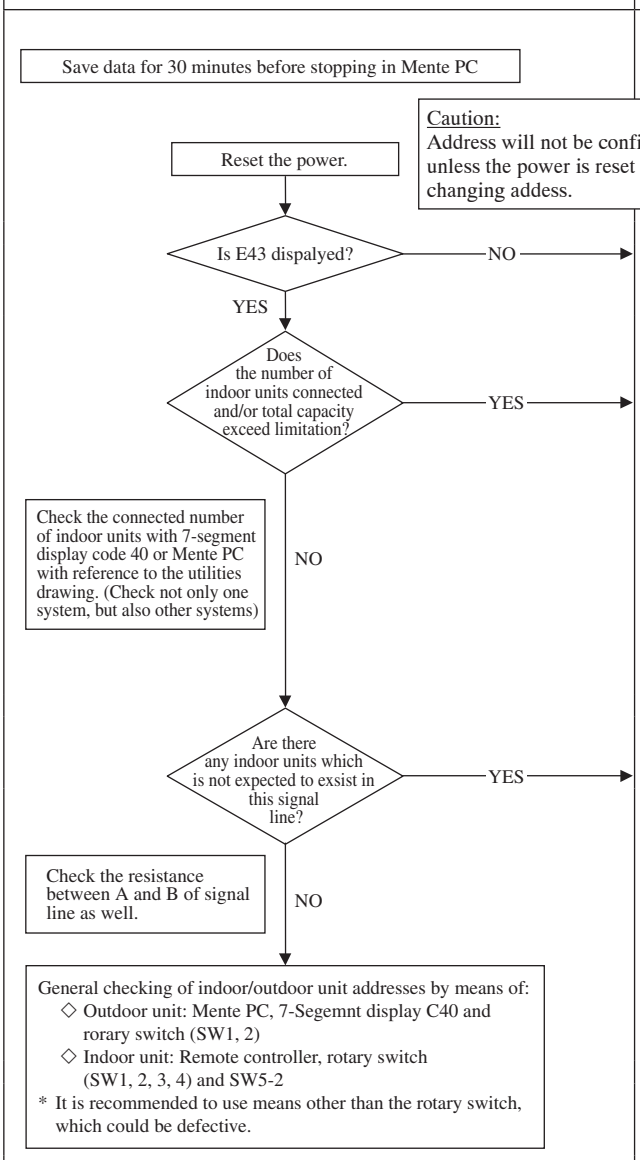

Note: After completing the above procedure, reset the power and confirm that the error display does not recur. Unless the power is reset for both indoor unit and outdoor unit, the set addresses will not be confirmed.

Error code	LED	Green	Red	Content
Remote controller: E45 7-segment display: E45	Indoor	Keeps flashing	Stays Off	Communication error between inverter PCB and outdoor control PCB
	Outdoor	Keeps flashing	1 time flash	

1. Applicable model

FDC112-155KXEN6
FDC112-155KXES6

2. Error detection method

3. Condition of error displayed

If the communication between inverter PCB and outdoor control PCB is not established.

4. Presumable cause

- Faulty inverter PCB
- Faulty connector between inverter PCB and outdoor control PCB
- Faulty outdoor control PCB

5. Troubleshooting

Diagnosis	Countermeasure
Save data for 30 minutes before stoopping in Mente PC	Check and save the data of operating conditions
Are the connectors of inverter PCB and outdoor control PCB OK? — NO	Insert the connectors securely
YES	
Are both JSW10, 11 on the inverter PCB OFF? — NO	Switch OFF all
YES	
Is LED on the inverter PCB flashing? — NO	No power on inverter PCB →Find the cause • Anomalous fan motor (FDC112-155KXEN6 only) • Faulty power circuit of control PCB (FDC112-155KXEN6 only)
YES	
Is the connection between inverter PCB and outdoor control PCB OK ? (1) 0.4Ω or more at 25°C — NO	Connect the signal wires correctly
YES	
Replace outdoor control PCB	
Does it become normal? — NO	Replace inverter PCB
YES	OK

Note:

Error code	LED	Green	Red	Content
Remote controller: E46 7-segment display: E46	Indoor	Keeps flashing	Stays Off	Mixed address setting methods coexistent in same network.
	Outdoor	Keeps flashing	Stays Off	

1. Applicable model

KXE6 multi outdoor unit

2. Error detection method

If the auto address setting and manual address setting are mixed in one superlink network.

3. Condition of error displayed

In case that the units with old and new superlink sistems are mixed in one superlink network, if both auto address setting and manual address setting are exsited.

4. Presumable cause

- Mistake in the address setting
- Mistake in the signal wire connection

5. Troubleshooting

Diagnosis	Countermeasure
Save data for 30 minutes before stopping in Mente PC	Check and save the data of operating condition Check which addess setting method (auto or manual setting) is applied to the outdoor unit system on which the error exsists.
Reset the power and restart operation.	
Caution: Address will not be confirmed, unless the power is reset after changing addess.	
Is E46 displayed? — NO →	Test run. * No action is taken because it is judged that the power reset was not done after changing address.
YES ↓	
Is it manual address setting? — NO →	Set address manually
YES ↓	
Turn ON the power of outdoor unit system one by one and check the unit that starts up with the auto address setting. →	Replace outdoor unit PCB.* (Defective rotary switch)
<Reference> Error display at mixed address setting	* Before replacement, please confirm whether the rotary switch for address setting is not damaged. (It was experienced that No. 5 on rotary switch was not recognized.) And confirm too whether the indoor SW5-2 (100 of order for indoor address setting) is OK or not.

	Auto	Manual
Auto address setting	E31	E46
Manual address setting	E46	Normal

Note: After completing the above procedure, reset the power and confirm that the error display does not recur. Unless the power is reset for both indoor unit and outdoor unit, the set addresses will not be confirmed.

Error code	LED	Green	Red	Content
Remote controller: E48 7-segment display: E48	Indoor	Keeps flashing	Stays Off	Outdoor DC fan motor anomaly
	Outdoor	Keeps flashing	1 time flash	

1. Applicable model

FDC112-155KXEN6
FDC112-155KXES6

2. Error detection method

By detecting the rotation speed of outdoor fan motor.

3. Condition of error displayed

If the actual rotation speed of outdoor fan motor (CM1, CM2) is 100min-1 or lower for 30 seconds continuously, outdoor fan stops. After 3-minute delay, it restarts automatically, but if this anomaly occurs 5 times within 60 minute after the initial stop.

4. Presumable cause

- Faulty outdoor control PCB
- Foreign material in rotational area of fan propeller
- Faulty fan motor
- Dust on the outdoor control PCB
- Blown fuse

5. Troubleshooting

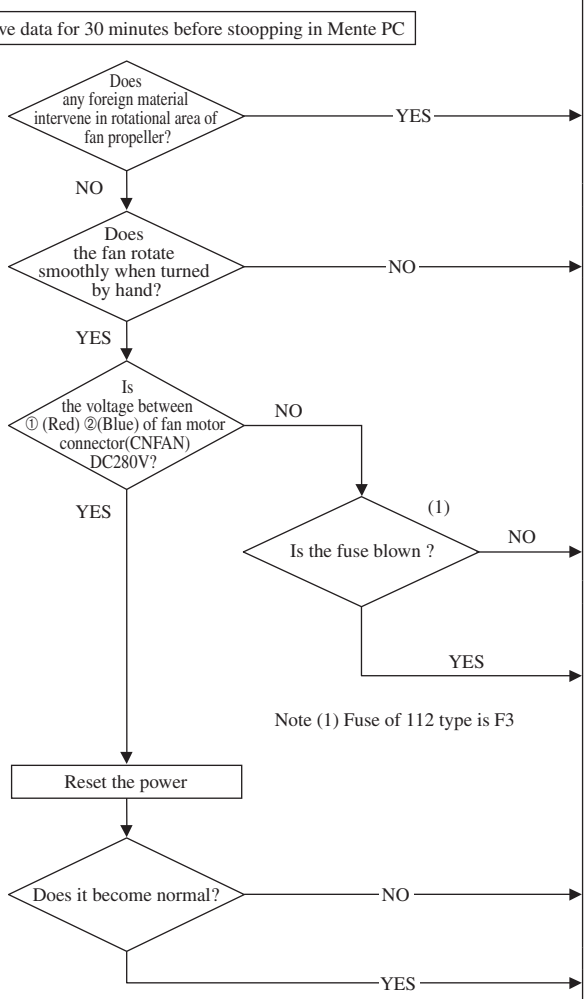

Note: When E48 error occurs, in almost cases F2 fuse (4A) on the harness is blown. There are a lot of cases that fuse is blown due to defective fan motor. And even though only the fuse is replaced,, another trouble (*) could occur. Therefore when replacing fuse, check whether the fan motor is OK or not.

After confirming the fan motor normal, check by power ON. (Don't power ON without confirming the fan motor normal.)

*1 The error which does not seem to relate E48 may occur like as "WAIT", Stay OFF of LED on outdoor control PCB, inverter communication error (E45) and etc.

Error code	LED	Green	Red	Content
Remote controller: E49 7-segment display: E49	Indoor	Keeps flashing	Stays Off	Low pressure error
	Outdoor	Keeps flashing	1 time flash	

1. Applicable model

KXE6 multi outdoor unit

2. Error detection method

Detected by low pressure sensor

3. Condition of error displayed

At startup with power on:
Low pressure ≤0.18 MPa is detected for 30 seconds, and this anomaly occurs 5 times within 60 minute.
During operation:
Low pressure ≤0.134 MPa is detected for 30 seconds or <0.003 Mpa is detected for 5 seconds. This anomaly occurs 5 times within 60 minute.

4. Presumable cause

- Low pressure sensor (defective PSL)
- Operation valve closed
- EEV closed (malfunction)
- Insufficient refrigerant amount
- Clogging (EEV, strainer)

5. Troubleshooting

Diagnosis	Countermeasure
Save data for 30 minutes before stopping in Mente PC	Check and save the data of operating condition. Check error status. Is the refrigerant amount OK? Check additional refrigerant amount filled in locally according to the piping length instracted on the label pasted on the pannel.
Reset the power and restart operation.	
Does it occur immediately after the startup? — YES	Check whether the operation valve opened.
Does it occur immediately after the startup? — NO → Does the low pressure fluctuate after the startup?	
Does the low pressure fluctuate after the startup? — NO → Is the sensor connector OK? — NO	Correct low pressure sensor connector.
Is the sensor connector OK? — YES → Are the sensor characteristics OK?* — NO	Replace low pressure sensor.
Are the sensor characteristics OK?* — YES	Replace outdoor control PCB.
* Refer to page 360 for the sensor characteristics.	
Does the low pressure fluctuate after the startup? — YES → Is the opening degree of indoor EEV flucturing? — NO → Is the thermistor connector of indoor heat exchanger OK? — NO	Correct temperature thermistor connector.
Is the thermistor connector of indoor heat exchanger OK? — YES → Are the thermistor characteristics OK? — NO	Replace heat exchanger temperature thermistor.
Are the thermistor characteristics OK? — YES	Replace indoor control PCB
Is the opening degree of indoor EEV flucturing? — YES → Is the checked result of harness and insulation of EEV coil OK? — NO	Replace EEV coil.
Is the checked result of harness and insulation of EEV coil OK? — YES → Does the EEV operate normally by judgement from Mente PC data, etc? — NO → Isn't EEV or strainer clogged? — YES	Replace EEV main body or strainer.
Does the EEV operate normally by judgement from Mente PC data, etc? — YES / Isn't EEV or strainer clogged? — NO	Check for short-circuit of air flow at indoor unit side and failure of indoor fan motor.

Note: Check whether the outdoor unit is connected to the indoor units in another superlink network?
If it does not recur, connect the Mente PC and continue to collect data.

Error code	LED	Green	Red	Content
Remote controller: E53/E55*1 7-segment display: E53/E55-1	Indoor	Keeps flashing	Stays Off	Suction pipe temperature thermistor anomaly (Tho-S), Under-dome temperature thermistor anomaly (Tho-C1)
	Outdoor	Keeps flashing	1 time flash	

*1 E53: Error for (Tho-s), E55: Error for Tho-C1

1. Applicable model

KXE6 multi outdoor unit

2. Error detection method

Detection of anomalously low temperature (resistance)

3. Condition of error displayed

- if -50°C is detected for 5 seconds within 2-minutes to 2-minutes 20-seconds after the compressor ON and if this anomaly occurs 3 times within 40 minutes after the initial detection.
- If this anomaly occurs 1 time within 20 seconds after power ON.

4. Presumable cause

- Disconnection of the sensor harness or the internal wire of sensing part (Check the molded part)
- Disconnection of the thermistor connector
- Defective outdoor control PCB

5. Troubleshooting

Diagnosis	Countermeasure
Save data for 30 minutes before stopping in Mente PC	Check and save the data of operating condition. Check the conditions whether it occurs immediately after the power on or during operation or stopping. Check the sensed value as well. Compare the temperature on Mente PC with actual measured value.
Is connection of thermistor connector OK? — NO →	Insert the connector firmly
YES ↓ Are the characteristics of thermistor OK? — NO →	Replace thermistor.
YES →	Replace control PCB.

* Check several times the temperature-resistance characteristics of thermistor a few times to find out any poor connection.

Suction pipe temperature thermistor (Tho-S)
Under-dome temperature thermistor (Tho-C1)
Temperature-resistance characteristics

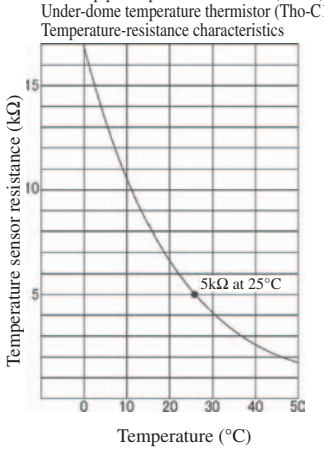

Note:

Error code	LED	Green	Red	Content
Remote controller: E54 7-segment display: E54-1, 2 *1	Indoor	Keeps flashing	Stays Off	High pressure sensor/ Low pressure sensor anomaly
	Outdoor	Keeps flashing	Stays Off*1	

*1 E54-1/1 time flash: Low pressure sensor anomaly, E54-2/2 times flash: High pressure sensor anomaly

1. Applicable model

KXE6 multi outdoor unit

2. Error detection method

Detection of anomalous voltage (pressure)

[Operating range
High pressure 0 – 4.15MPa
Low pressure 0 – 1.7MPa]

3. Condition of error displayed

Sensor output voltage

[0V or lower
3.49V or higher]

Detected for 5 seconds within 2 minutes to 2 minutes and 20 seconds after the compressor ON.

4. Presumable cause

- Disconnected sensor harness
- Disconnected sensor connector
- Faulty sensor
- Defective outdoor control PCB
- Faulty installation conditions
- Insufficient airflow volume
- Excessive or insufficient refrigerant amount

5. Troubleshooting

Diagnosis	Countermeasure
Save data for 30 minutes before stopping in Mente PC	Check and save the data of operating condition. Check the conditions whether it occurs immediately after the power on or during operation or stopping. Check also sensor value.
Check the data for 30 minutes before stopping	
Is anomalous pressure detected? — YES	
Is the connector of the faulty sensor inserted properly to the connector on the outdoor control PCB? — NO	Insert connector securely and restart operation.
Is the connector of the faulty sensor inserted properly to the connector on the outdoor control PCB? — YES	
Is anomalous pressure detected? — NO	
Reset the power and restart operation.	
Does it recur? — NO	Temporary malfunction by noise. Correct if source of noise is identified.
Does it recur? — YES	
Does the pressure converted from the sensor output voltage match the actual pressure measure by pressure gauge? — NO	Replace sensor.
Does the pressure converted from the sensor output voltage match the actual pressure measure by pressure gauge? — YES	Replace outdoor control PCB.

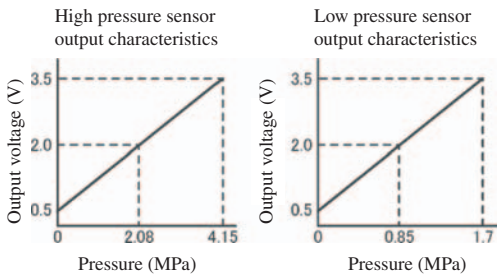

Sensor output Black (GND) – White; Output voltage (Black – Red; DC5V)

Note:

Error code	LED	Green	Red	Content
Remote controller: E56 7-segment display: E56-1, 2 *1	Indoor	Keeps flashing	Stays Off	Power transitor temperature thermistor anomaly (Tho-P1, Tho-P2)
	Outdoor	Keeps flashing	Stays Off*1	

*1 E56-1/1 time flash:Tho-P1 anomaly, E56-2/2 times flash: Tho-P2 anomaly

1. Applicable model

KXE6 multi outdoor unit

2. Error detection method

Detection of anomalously low temperature (resistance) of power transistor temperature sensor

3. Condition of error displayed

If -10°C or lower is detected for 5 seconds within 10-minutes to 10-minutes 20-seconds after the compressor ON and if this anomaly occurs 3 times within 40 minutes after the initial detection.

4. Presumable cause

- Disconnection of the thermistor harness or the internal wire of sensing part (Check the molded part)
- Disconnection of the thermistor connector
- Defective outdoor control PCB

5. Troubleshooting

Diagnosis	Countermeasure
Save data for 30 minutes before stopping in Mente PC	Check and save the data of operating condition. Check the conditions whether it occurs immediately after the power on or during operation or stopping. Check the sensor value as well.
Is connection of thermistor connector OK? — NO →	Insert the connector firmly
YES ↓ Are the characteristics of thermistor OK? — NO →	Replace power transistor temperature thermistor (Tho-P1, P2).
YES →	Replace outdoor control PCB.

* Check several times the temperature-resistance characteristics of thermistor to find out any poor connection.

Temperature-resistance characteristics of power transistor temperature thermistor

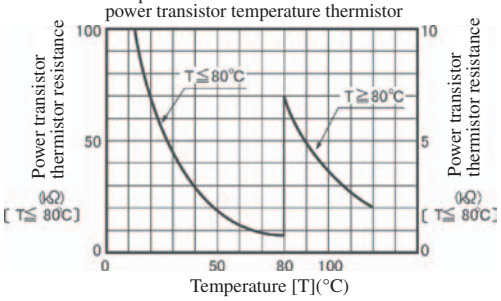

Note:

Error code	LED	Green	Red	Content
Remote controller: E58 7-segment display: E58	Indoor	Keeps flashing	Stays Off	Anomalous compressor by loss of synchronism
	Outdoor	Keeps flashing	1 time flash	

1. Applicable model

FDC112-155KXEN6
FDC112-155KXES6

2. Error detection method

When 7-segment LED (E58) displayed.

3. Condition of error displayed

This anomaly is established 4 times within 15 minutes.

4. Presumable cause

- Insufficient time passed after power supplied.
  (Startup the compressor without crankcase heater ON)
- Faulty compressor

5. Troubleshooting

Diagnosis	Countermeasure
Save data for 30 minutes before stopping in Mente PC	Check and save the data of operating condition
Check the data for 30 minutes before stopping	
Is this the first startup within one hour after power was supplied? — YES	There is posibility that refrigerant is migrated in the refrigerant oil in the compressor. Wait for about one hour under the condition of power ON and start again. (Keep on crankcase heater ON and evaporate the liquid refrigerant migrated in the compressor.
NO	
Is there any record to replace the inverter PCB ? — YES	There is some possiblity that the model setting is wrong. Check the dip switch of model setting.
NO	
There is some possibility that compressor is broken. Replace the compressor.	

Note: If it does not recur, connect the Mente PC and continue to collect data

Error code	LED	Green	Red	Content
Remote controller: E59 7-segment display: E59	Indoor	Keeps flashing	Stays Off	Compressor startup failure
	Outdoor	Keeps flashing	5 times flash	

1. Applicable model

FDC112-155KXEN6
FDC112-155KXES6

2. Error detection method

If it fails to change over to the operation for rotor detection of compressor motor (If the compressor speed cannot increase 11Hz or higher)

3. Condition of error displayed

If compressor fails to startup for 20 times (10 patterns x 2 times). (It is availabel to reset by remote controller after 3 minutes delay)

4. Presumable cause

- Faulty fan motor
- Faulty outdoor control PCB
- Faulty inverter PCB
- Anomalous power supply voltage
- Nonconformity of refrigerant amount and refrigerant circuit
- Faulty compressor

5. Troubleshooting

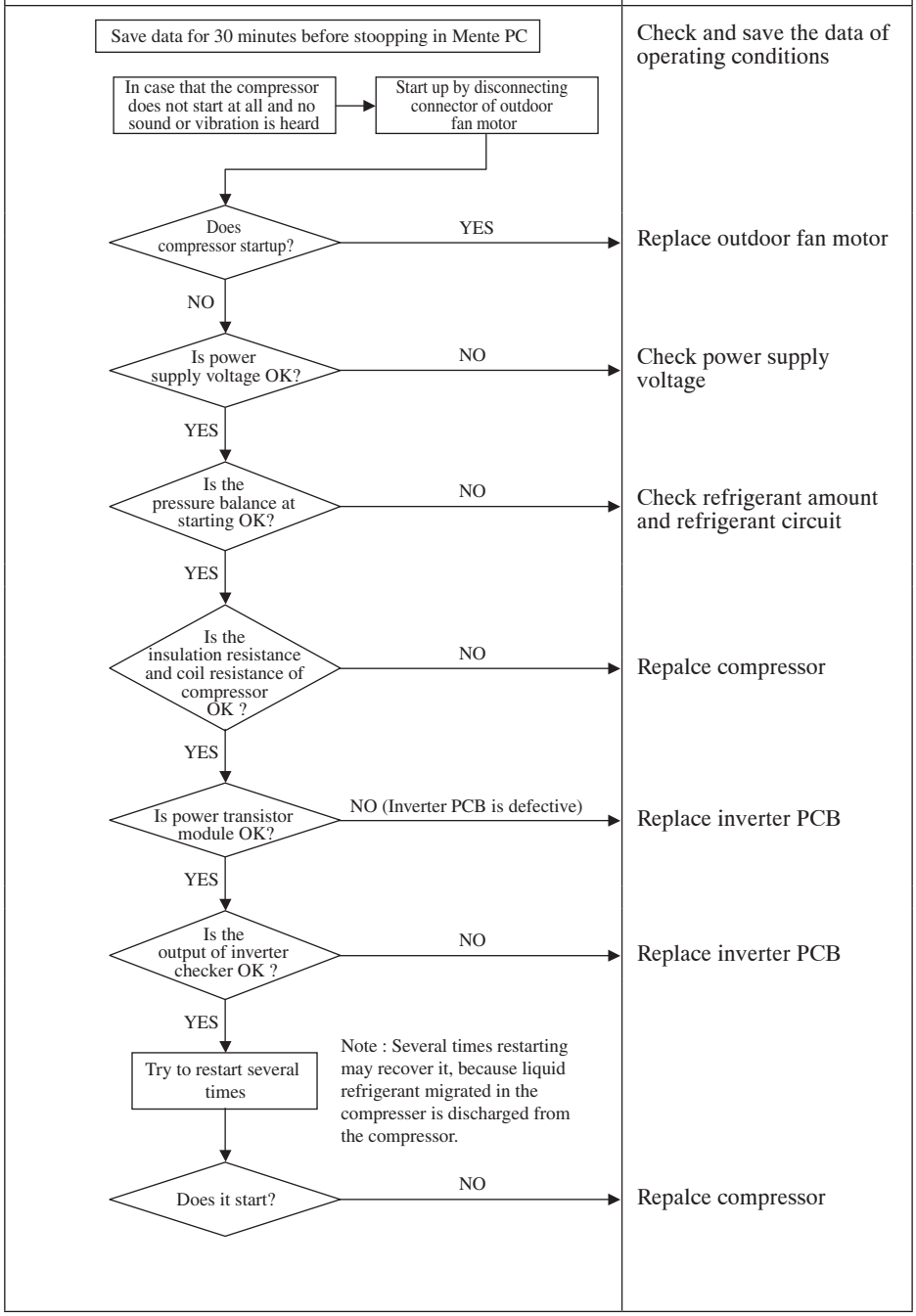

Note: Insulation resistance

- The unit is left for long period without power supply or soon after installation, insuration resistance may decrease to several MΩ or lower due to the liquid refrigerant migrated in the refrigerant oil in compressor. If the electric leakage breaker is activated due to low insulation resistance, check followins.
  ① Check whehter the insulation resistance can recover or not, ater 6 hours has passed since power ON. (By energize the crankcase heater, liquid refrigerant migrated in the refrigerant oil in compressor can be evaporated)
  ② Check whether the electric leakage breake conforms to high-hermonic specifications (As KXE6 units has inverter, in order to prevent from improper operation, be sure to use high-hermonic one.)

Error code	LED	Green	Red	Content
Remote controller: E63 7-segment display: E63	Indoor	Keeps flashing	Stays Off	Emergency stop
	Outdoor	Keeps flashing	1 time flash	

1. Applicable model

KXE6 multi indoor unit

2. Error detection method

If ON signal inputted to the CnT terminal of indoor control PCB.

3. Condition of error displayed

Same as above

4. Presumable cause

Occurrence of emergency stop factor

5. Troubleshooting

Diagnosis	Countermeasure
Save data for 30 minutes before stopping in Mente PC	Check and save the data of operating condition. Check if it occurred during operation or at the power on.
Is the remote controller setting of Emergency Stop "Valid"? — NO →	Replace indoor control PCB.
YES ↓ Is ON signal inputted to the CnT terminal of indoor control PCB? — NO →	Change the remote controller setting of Emergency Stop "Invalid"
YES →	Check the cause of emergency stop. (It is better to have the data for 30 minutes before stopping, when discussing with an installer.)

Note: Indoor unit detected emergency stop commands all stop.
Check whether wrong remote controller setting of emergency stop was done or not.

(4) Replacement of PCB at outdoor unit side

(a) Control PCB

Precautions for Safety
• Since the following precaution is the important contents for safety, be sure to observe them. WARNING and CAUTION are described as follows: ⚠ WARNING — Indicates an imminently hazardous situation which will result in death or serious injury if proper safety procedures and instructions are not adhered to. ⚠ CAUTION — Indicates a potentially hazardous situation which may result in minor or moderate injury if proper safety procedures and instructions are not adhered to.
⚠ WARNING
• Securely replace the PCB according to this procedure. If the PCB is incorrectly replaced, it will cause an electric shock or fire. • Be sure to check that the power source for the outdoor unit is turned OFF before replacing the PCB. The PCB replacement under current-carrying will cause an electric shock or fire. • After finishing the PCB replacement, check that wiring is correctly connected with the PCB before power distribution. If the PCB is incorrectly replaced, it will cause an electric shock or fire.
⚠ CAUTION
• Band the wiring so as not to tense because it will cause an electric shock.

Replacement the control PCB according to the following procedure.

1. Replace the PCB **after elapsing 3 minutes from power OFF.**
   (Be sure to measure voltage (DC) on both capacitor terminals located in controller back, and **check that the voltage is discharged sufficiently**.(Refer to Fig.2))
2. Disconnect the connectors from the control PCB.
3. Disconnect the white wiring passing through CT1 on the PCB before replacing the PCB.
4. Match the setting switches (SW3-5) with the former substrate.
5. Tighten up a screw after passing white wiring through CT1 of the changed.
6. Connect the connectors to the control PCB.(Confirm the **connectors are not half inserted**.)

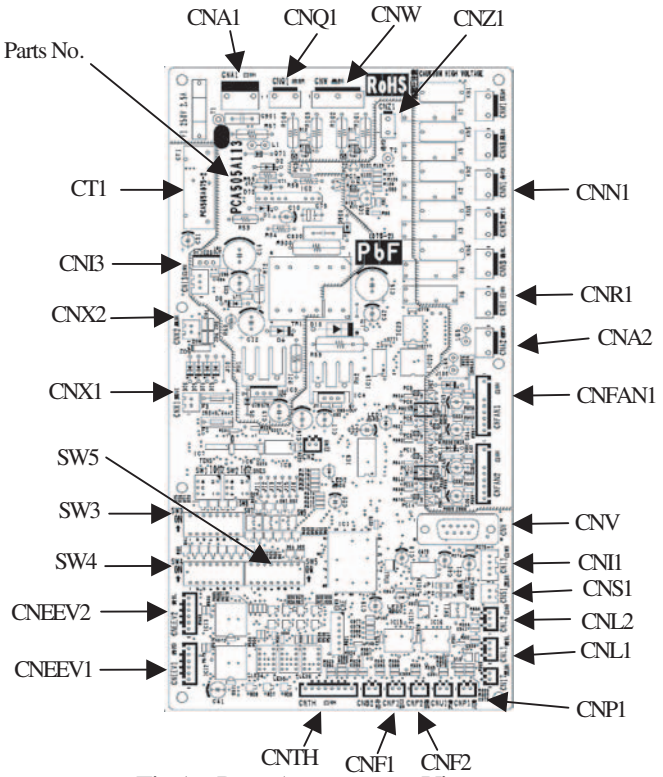

Fig.1 Parts Arrangement View

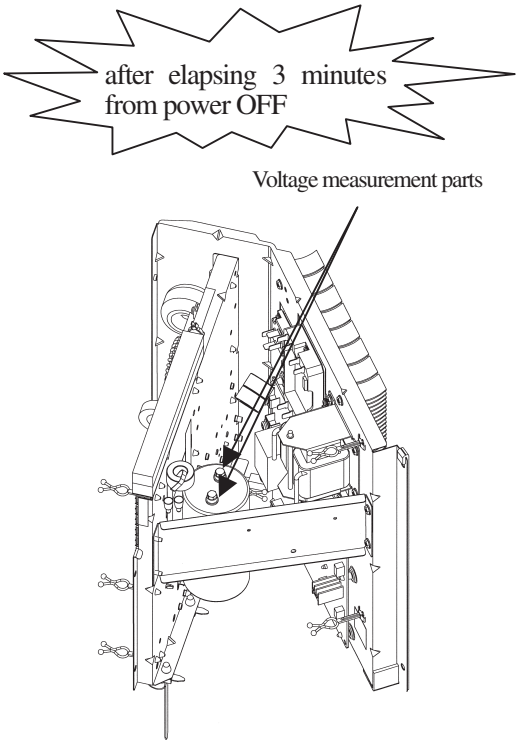

Fig.2 Position of capacitor

(b) Inverter PCB

1) FDC112, 140, 155KXEN6 model

a) Exchange the PCB **after elapsing 3 minutes from power OFF**.
(**Be sure to measure voltage (DC)** on both capacitor terminals located in controller back, and **check that the voltage is discharged sufficiently**.(Refer to Fig.2))

b) Take off the connection of inverter PCB terminal block connector and remove the screw of power transistor then remove the PCB. Wipe off the silicon grease neatly on the controller's radiation heat fins.

c) Refer to table1 for the setting of switch (JSW10,11) of new PCB.

d) Before installing the power transistor on the new PCB,Apply uniformly a bundled of silicon grease first on the surface of power transistor.Make sure it is applied to prevent damage on power transistor.

e) Tighten the screw of power transistor on inverter PCB and connect the terminal block.Confirm the connection and don't use soldering in the connection.Tighten properly the power transistor with a screw and make sure there is no slack.Power transistor can be damage if not properly tighten.(Recommended power transistor tightening torque:0.98~1.47N·m)

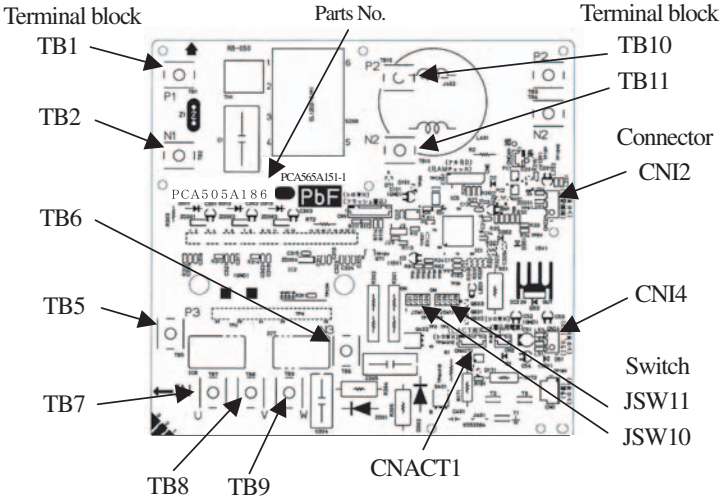

Fig. 1 Parts arrangement view

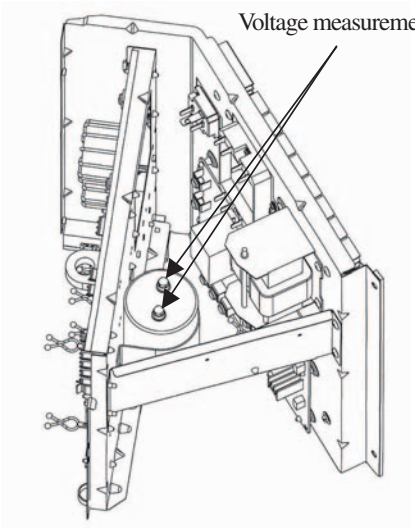

Fig. 2 Position of capacitor

Table. 1 Switch setting

JSW10	-1	OFF	JSW11	-1	ON
	-2	OFF		-2	OFF
	-3	OFF		-3	OFF
	-4	OFF		-4	ON

2) FDC112, 140, 155KXES6 model

a) Exchange the PCB **after elapsing 3 minutes from power OFF**.
(**Be sure to measure voltage (DC)** on both capacitor terminals located in controller back, and **check that the voltage is discharged sufficiently**.(Refer to Fig.2))

b) Take off the connection of inverter PCB terminal block connector and remove the screw of power transistor then remove the PCB. Wipe off the silicon grease neatly on the controller's radiation heat fins.

c) Refer to table1 for the setting of switch (JSW10,11) of new PCB.

d) Before installing the power transistor on the new PCB,Apply uniformly a bundled of silicon grease first on the surface of power transistor.Make sure it is applied to prevent damage on power transistor.

e) Tighten the screw of power transistor on inverter PCB and connect the terminal block.Confirm the connection and don't use soldering in the connection.Tighten properly the power transistor with a screw and make sure there is no slack.Power transistor can be damage if not properly tighten.(Recommended power transistor tightening torque:0.98~1.47N·m)

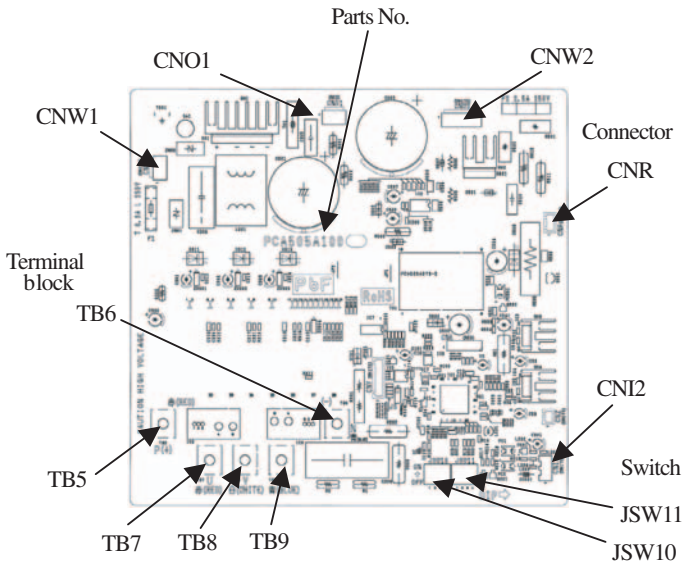

Fig. 1 Parts arrangement view

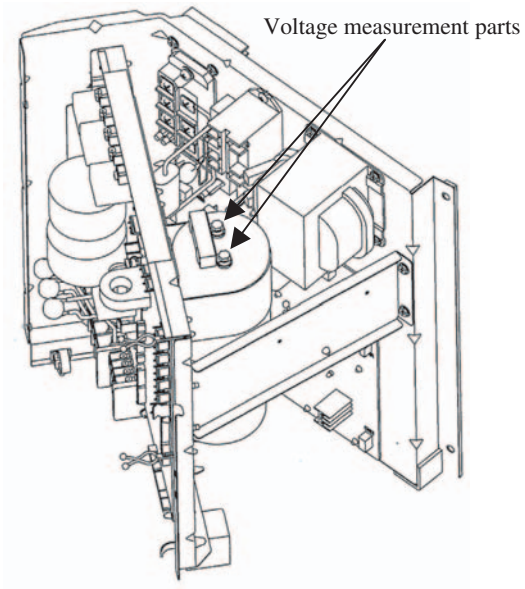

Fig. 2 Position of capacitor

Table. 1 Switch setting

JSW10	-1	OFF	JSW11	-1	OFF
	-2	OFF		-2	ON
	-3	OFF		-3	OFF
	-4	OFF		-4	ON

■ Function of Dip switch for contol (SW3, 4, 5)

• SW3 (Function setting)

Switch		Function
SW3-1	ON	Inspection LED reset
	OFF	Normal
SW3-4	ON	Check operation cancel
	OFF	Normal
SW3-5	ON	Check operation start
	OFF	Normal
SW3-7	ON	Forced cooling/heating
	OFF	Normal

• SW4 (Change demand ratio)

Switch				Function
SW4-7	ON	SW4-8	OFF	Compressor capacity 60%
			ON	Compressor capacity 0%
	OFF		OFF	Compressor capacity 80%
			ON	Compressor capacity 40%

■ Function of Jumper wire (J13, 15)
(With: Shorted / None: Opened)

Jumper		Function
J13	With	External input Level input
	None	External input Pulse input
J15	With	Defrost time Normal
	None	Defrost time Cold weather region

• SW4 (Model selection)

Switch \ Model	FDC112KXE6	FDC140KXE6	FDC155KXE6
SW4-1	OFF	ON	OFF
SW4-2	OFF	OFF	ON

• SW4 (Power supply voltage)

Switch \ Model	All models
SW4-1	ON

• SW4 (Power supply voltage)

Switch \ Model	FDC112KXEN6 FDC140KXEN6 FDC155KXEN6	FDC112KXES6 FDC140KXES6 FDC155KXES6
SW4-1	ON	OFF

• SW5 (Function setting)

Switch		Function	
SW5-1	ON	Test run switch	Test run
	OFF	Test run switch	Normal
SW5-2	ON	Test run operation mode	Cooling
	OFF	Test run operation mode	Heating
SW5-3	ON	Pump down switch	Pump down
	OFF	Pump down switch	Normal

• SW7, 8, 9 (Function setting)

Switch	Function	
SW7	Data erase/data write	
SW8	7-segment dispalay No. UP	order of 1
SW9	7-segment dispalay No. UP	order of 10

■ Function of Connector

Connector	Function	Connector	Function
CNA1	Power supply	CNL1	High pressure sensor
CNQ1	High pressure switch (CN1)	CNP1	Power transistor temperature thermistor
CNW	Open phase	CNEEV1	Heating EEV
CNN1	4-way valve	CNEEV2	Subcooling coil EEV
CNR1	Crankcase heater	CNX1	Superlink signal
CNA2	Power fan motor	CNF1	Subcooling coil temperature thermistor (liquid)
CNS1	External input	CNF2	Subcooling coil temperature thermistor (gas)
CNL2	Low pressure sensor		

5 WIRELESS KIT (OPTIONAL PARTS)

⚠ WARNING

- Fasten the wiring to the terminal securely and hold the cable securely so as not to apply unexpected stress on the terminal.
  Loose connection or hold will cause abnormal heat generation or fire.

- Make sure the power supply is turned off when electric wiring work.
  Otherwise, electric shock, malfunction and improper running may occur.

⚠ CAUTION

- DO NOT install the wireless kit at the following places in order to avoid malfunction.
  (1) Places exposed to direct sunlight
  (2) Places near heat devices
  (3) High humidity places
  (4) Hot surface or cold surface enough to generate condensation
  (5) Places exposed to oil mist or steam directly
  (6) Uneven surface
  (7) Places affected by the direct airflow of the AC unit.
  (8) Places where the receiver is influenced by the fluorescent lamp (especially inverter type) or sunlight.
  (9) Places where the receiver is affected by infrared rays of any other communication devices
  (10) Places where some object may obstruct the communication with the remote controller

- DO NOT leave the wireless kit without the cover.
  In case the cover needs to be detached, protect the receiver with a packaging box or bag in order to keep it away from water and dust.

Attention

- Instruct the customer how to operate it correctly referring to the instruction manual.
- For the installation method of the air conditioner itself, refer to the installation manual enclosed in the package.

5.1 FDT SERIES

The FDT series is an exclusive series with all wired models. However, these models can also be used wireless units by using the optional wireless kit.

(1) Wireless kit model

Model
RCN-T-36-W-E

(2) Accessories

Please make sure that you have all of the following accessories.

Receiver		1
Wireless remote controller		1
Parts set		1

Remote controller holder		1
Wood screw for holder		2
AAA dry cell battery (RO3)		2

(3) How to install the receiver

The receiver can be installed by replacing with a corner panel on the applicable decorative panel.

Preparation before installation

① Attach the decorative panel onto the air conditioner according to the installation manual for the panel.

② Remove the air return grille.

③ Remove a corner panel located on the refrigerant pipes side.

④ Remove three screws and detach the cover (indicated as shadowed area) from the control box of the air conditioner.

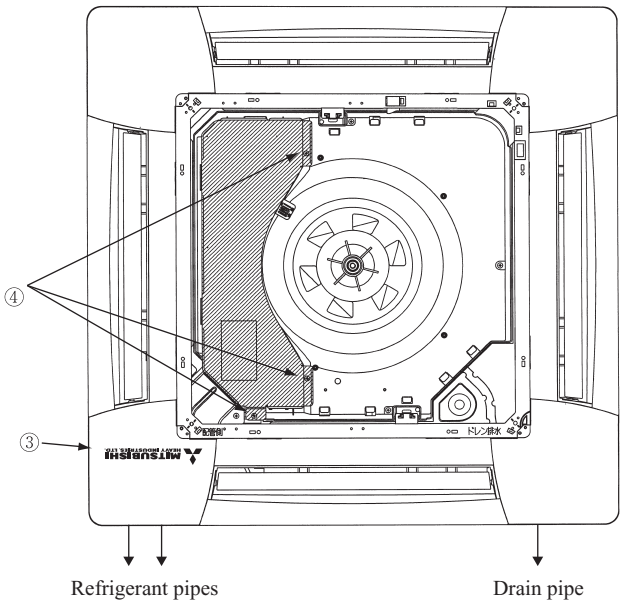

Setting on site

① PCB on the receiver has the following switches to set the functions. Default setting is shown with ☐ mark.

SW1	Customized signal setting to avoid mixed communication	ON : Normal OFF : Remote
SW2	Receiver master/slave setting	ON : Master OFF : Slave
SW3	Buzzer valid/Invalid	ON : Valid OFF : Invalid
SW4	Auto restart	ON : Valid OFF : Invalid

② Remove the cover by unscrewing two screws from the back of receiver.

③ Change the setting by the switch on PCB.

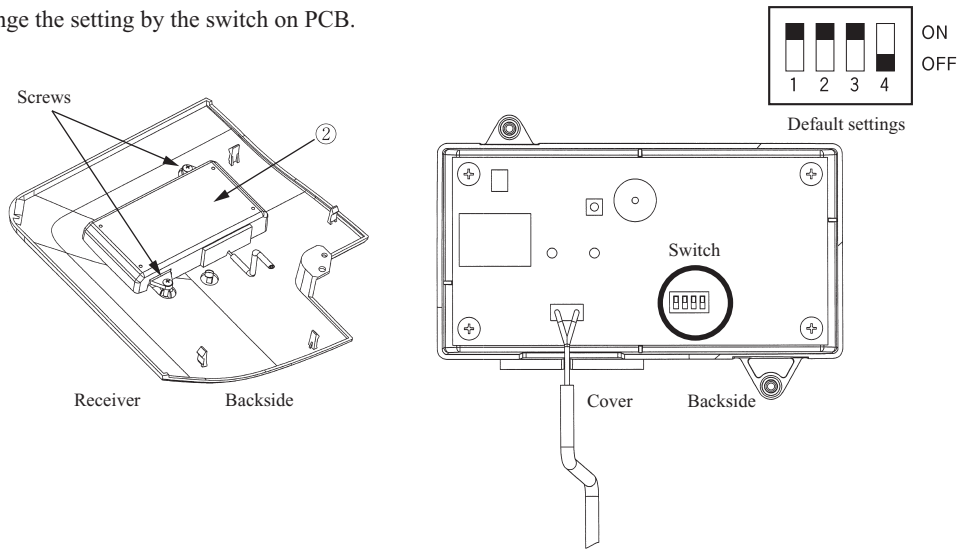

④ When SW1 is turned to OFF position, change the corresponding remote controller setting as follows:

How to change the remote controller setting

Pressing ACL and AIR FLOW button at the same time or inserting the batteries with pressing AIR FLOW button will customize the signal.

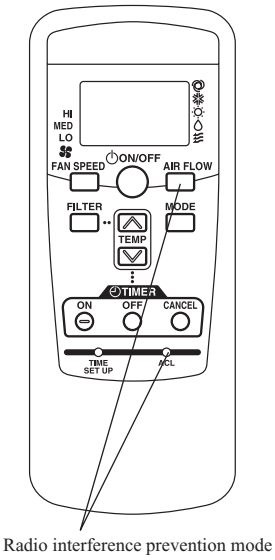

Radio interference prevention mode

Note

* When the batteries are removed, the setting will return to the default setting.
  Please make sure to reset it when the batteries are replaced.

Caution

Instruct the customer to set the mentioned above when replacing the batteries.
(How to set is also mentioned in the user's manual attached on the air conditioner.)

Installation of the receiver

① Loosen the bolts which fix the panel and make a gap between the panel and the indoor unit

② Put the wiring of the receiver through the opening.

③ Put the wiring on the notch on the control box so as not to be pinched by the control box and lid as shown below.

④ Connect the wiring to the terminal block provided in the control box. (Non- polarized)

⑤ Attach the receiver to the panel according to the panel installation manual.

⑥ Fix the wiring with the clamp so that the wiring do not contact the edge of control box's metal sheet.

⑦ Reattach the control box lid with 3 screws removed.

*Note: Make sure the wires not to be pinched by any other parts like panel, control box and indoor unit.

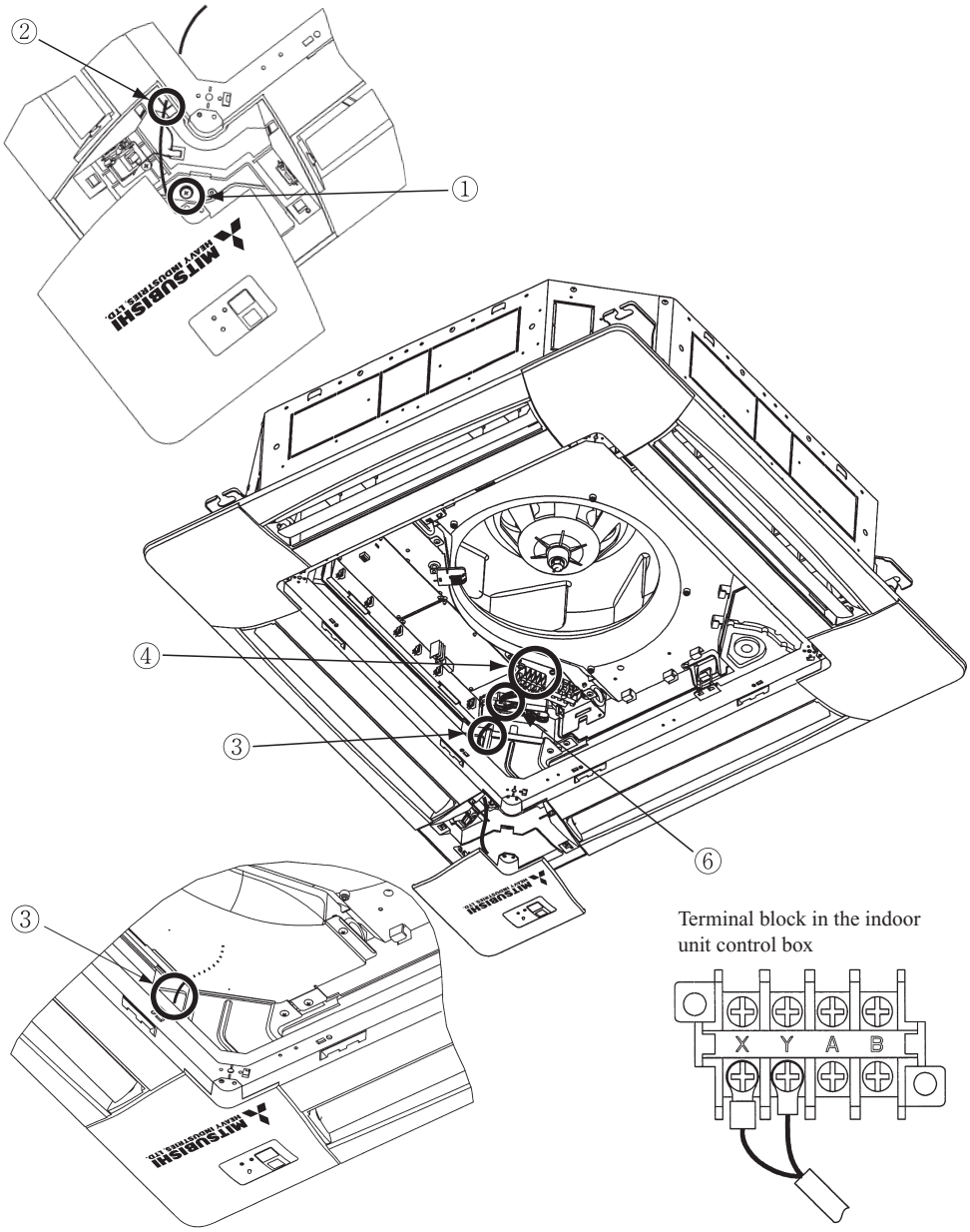

(4) Remote controller

Installation of the controller holder

Caution

DO NOT install it on the following places

1. Places exposed to direct sunlight
2. Places near heat devices
3. High humidity places
4. Hot surface or cold surface enough to generate condensation
5. Places exposed to oil mist or steam directly.
6. Uneven surface

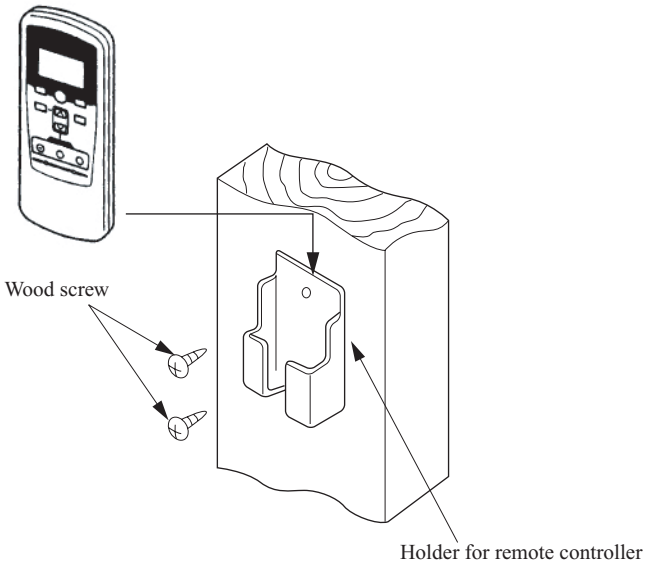

Installation tips for the remote controller holder

· Adjust and keep the holder upright

· Tighten the screw to the end to avoid scratching the remote controller.

· DO NOT attach the holder on plaster wall.

How to insert batteries

① Detach the back lid.

② Insert the batteries. (two AAA batteries)

③ Reattach the back lid.

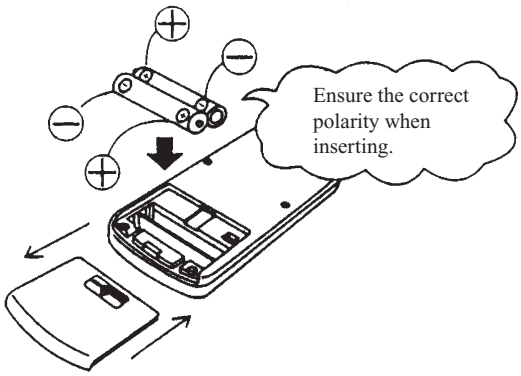

Control plural indoor units with one remote controller

Up to 16 indoor units can be connected.

① Connect the XY terminal with 2-core wire. As for the size, refer to the following note.

② For Packaged air conditioner series, set the indoor unit address with SW2 on the indoor unit PCB from [0] to [F] so as not to duplicate.

Restrictions on the thickness and length of wire (Maximun total extension 600m.)	
Standard	Within 100m x 0.3 mm^2
	Within 200m x 0.5 mm^2
	Within 300m x 0.75mm^2
	Within 400m x 1.25mm^2
	Within 600m x 2.0 mm^2

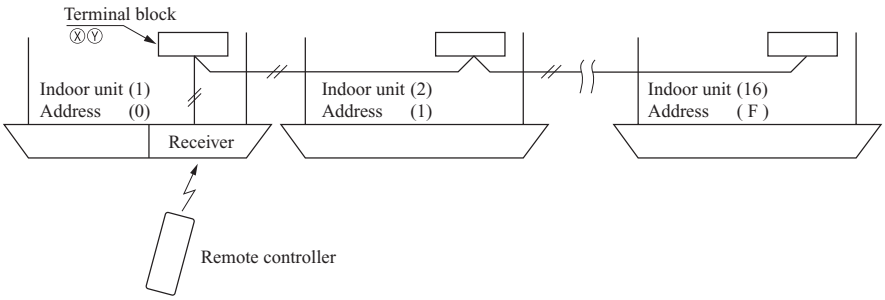

③ For VRF series, set the indoor unit address with SW1, SW2 and SW5-2 on the indoor unit PCB from [000] to [127] so as not to duplicate.

Master/Slave setting when using plural remote controllers

Up to two receivers can be installed in one indoor unit group.

When two receivers are used, it is necessary for a receiver to turn OFF SW2 on the receiver PCB to set it as slave.

(For the method of switching, please see **Setting on site** in the section of **How to install the receiver** in this manual.)

Wireless remote controller's operable area

① Standard reachable area of the signal

[condition] Illuminance at the receiver: 300lux

(when no lighting is installed within 1m of the receiver in an ordinary office.)

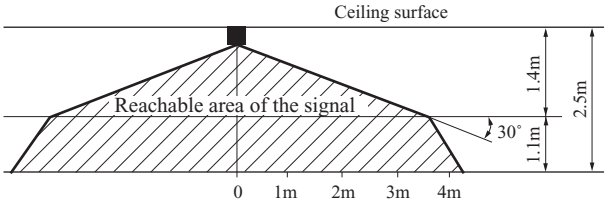

② Correlation between illuminance at the receiver and reachable area of the signal in a plain view. The drawing in the right shows the correlation between the reachable area of the signal and illuminance at the receiver when the remote controller is operated at 1.1m high under the condition of ceiling height of 2.5m. When the illuminance becomes double, the area is narrowed down to two thirds.

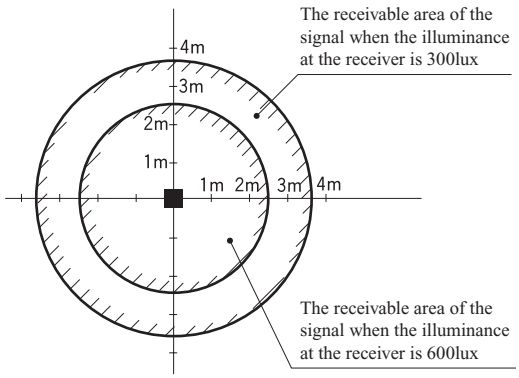

③ Installation tips when several receivers are installed close Minimum distance between the indoor units which can avoid cross communication is 5m under the condition of 300lux of illuminance at the receiver.
(When no lighting is installed within 1m of the receiver in an ordinary office)

(5) How to disable the Auto mode operation

VRF system (except heat recovery 3-pipe systems) cannot be operated in Auto mode.
Make sure to set the remote controller for the models so as not to be able to choose Auto mode.
Pushing ACL and MODE button at the same time or inserting the batteries with pressing MODE button will make auto mode operation.

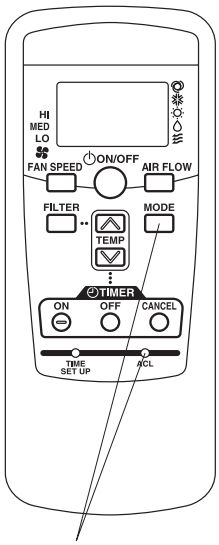

Auto mode operation setting

Attention

* When the batteries are removed, the setting will return to the default setting (Auto mode is valid).

Caution

Instruct the customer to set the mentioned above when replacing the batteries.
(How to set is also mentioned in the user's manual attached on the air conditioner.)

(6) Backup button

A Backup button is provided on the receiver.

Even when the operation from the wireless remote controller is not possible (due to flat batteries, controller lost, or controller failure), still it possible to operate as temporary means. Press the button directly when operating it.

(a) The air conditioner starts the operation with the condition of Auto mode, 23˚C of set point, High fan speed and horizontal louver position.

(b) The air conditioner stops the operation when the button is pressed when in operation.

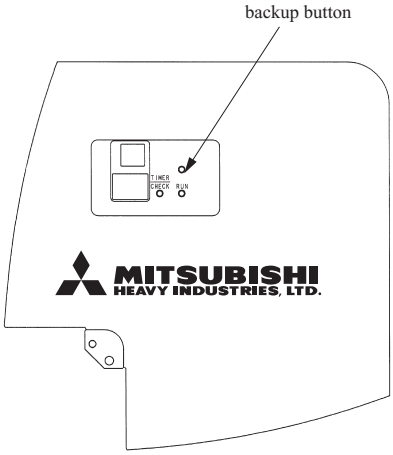

(7) Cooling test run operation

- After safety confirmation, turn on the power.
- Transmit a cooling operation command with wireless remote controller, while the backup button on the receiver is pressed.
- If the backup button on the receiver is pressed during a test run, it will end the test run.
- If you cannot operate the unit properly during a test run, please check by consulting with inspection guides on the wiring diagram of outdoor units.

(8) How to read the two-digit display

On the receiver of a wireless kit, a two-digit (7-segment) display is provided.

(a) An indication will be displayed for one hour after power on.

(b) An indication will be displayed for 3.5 seconds after transmitting a “STOP” command from the wireless remote controller or the operation of the backup button to stop the unit.

(c) An indication appearing in (a) or (b) above will go off as soon as the unit starts operation.

(d) When there are no error records to indicate, addresses of all the connected units are displayed.

(e) When there are some error records remaining, the error records are displayed.

(f) Error records can be cleared by transmitting a “STOP” command from the wireless remote controller, while the backup button is pressed.

5.2 FDTC SERIES

The FDTC series is an exclusive series with all wired models. However, these models can also be used wireless units by using the optional wireless kit.

(1) Wireless kit model

Model
RCN-TC-24W-ER

(2) Accessories

Please make sure that you have all of the following accessories.

Receiver		1	Remote controller holder		1
Wireless remote controller		1	Wood screw for holder		2
Parts set		1	AAA dry cell battery (RO3)		2

(3) How to install the receiver

The receiver can be installed by replacing with a corner panel on the applicable decorative panel.

Preparation before installation

① Attach the decorative panel onto the air conditioner according to the installation manual for the panel.

② Remove the air return grille.

③ Remove a corner panel located on the refrigerant pipes side.

④ Remove to screws and detach the lid from the control box of the air conditioner.

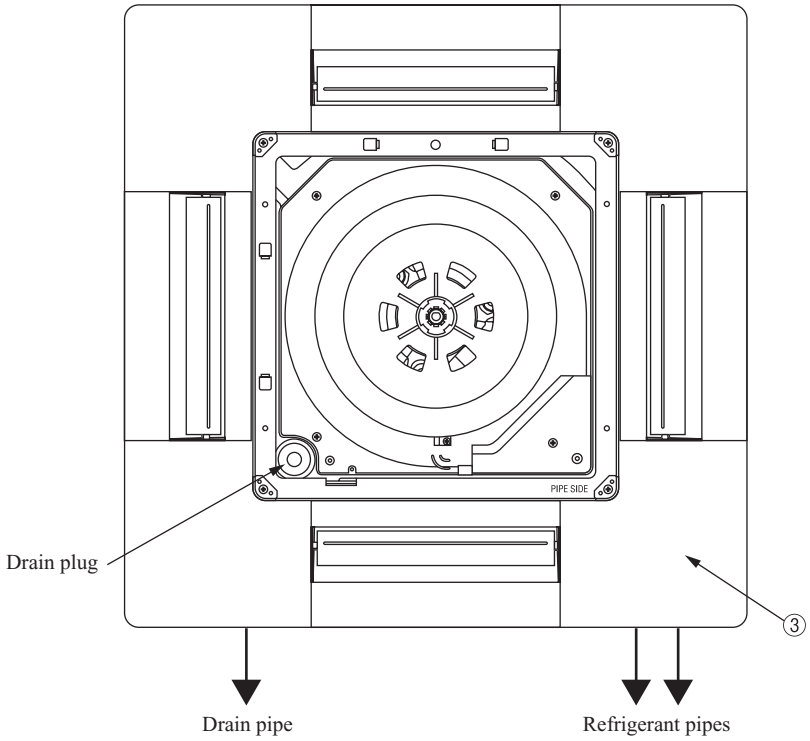

Setting on site

① PCB on the receiver has the following switches to set the functions. Default setting is shown with ☐ mark.

SW1	Customized signal setting to avoid mixed communication	ON : Normal OFF : Remote
SW2	Receiver master/slave setting	ON : Master OFF : Slave
SW3	Buzzer valid/Invalid	ON : Valid OFF : Invalid
SW4	Auto restart	ON : Valid OFF : Invalid

② Remove the cover by unscrewing two screws from the back of receiver.

③ Change the setting by the switch on PCB.

Default settings

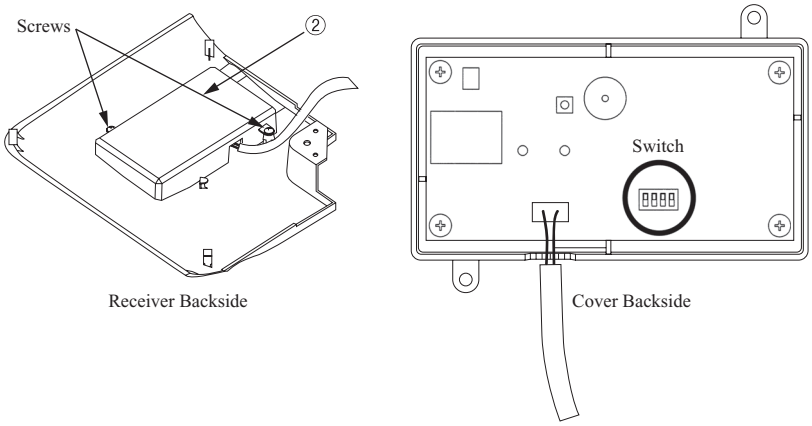

④ When SW1 is turned to OFF position, change the corresponding remote controller setting as follows:

How to change the remote controller setting

Pressing ACL switch with AIR FLOW button kept pressing or inserting the batteries with pressing AIR FLOW button will customize the signal.

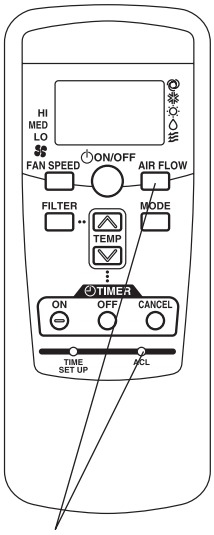

Radio interference prevention mode

Note

* When the batteries are removed, the setting will return to the default setting (Auto mode is valid).

Caution

Instruct the customer to set the mentioned above when replacing the batteries.(How to set is also mentioned in the user's manual attached on the air conditioner.)

Installation of the receiver

① Attach the receiver to the panel according to the panel installation manual.

② Remove two screws and detach the lid from the control box.

③ Put the wiring in the control box with other wiring as shown below.

④ Connect the wiring to the terminal block provided in the control box. (Non- polarized)

⑤ Fix the wiring with the clamp as shown below.

⑥ Reattach the control box lid with 2 screws removed.

* Note: Make sure wires not to be pinched by any other parts like panel and control box.

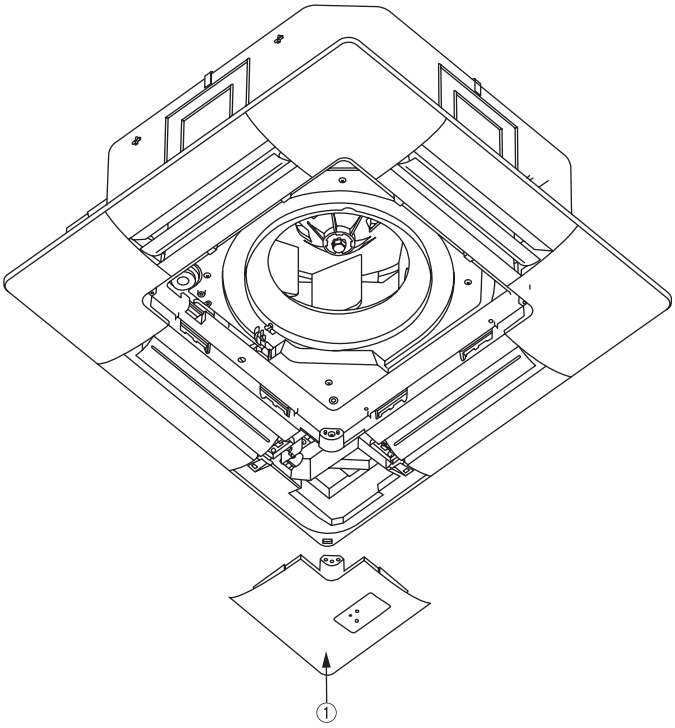

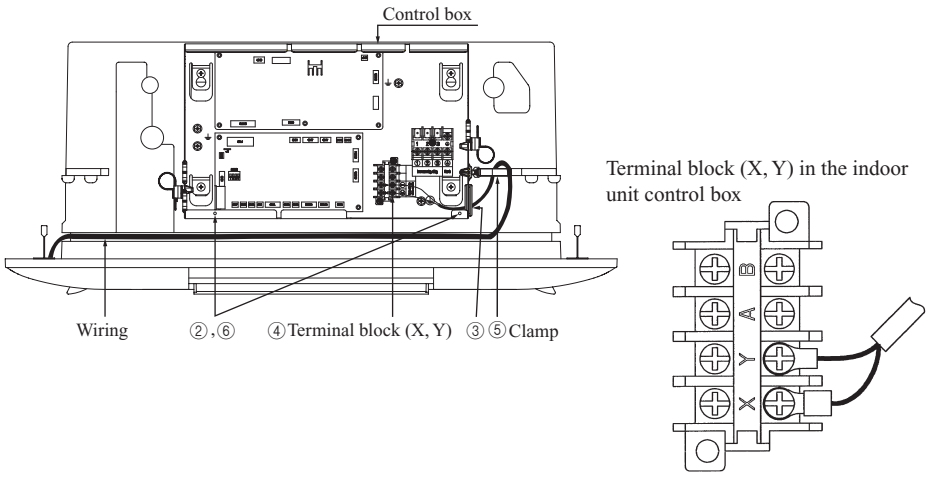

(4) Remote controller

Installation of the controller holder

Caution

DO NOT install it on the following places

1. Places exposed to direct sunlight
2. Places near heat devices
3. High humidity places
4. Hot surface or cold surface enough to generate condensation
5. Places exposed to oil mist or steam directly.
6. Uneven surface

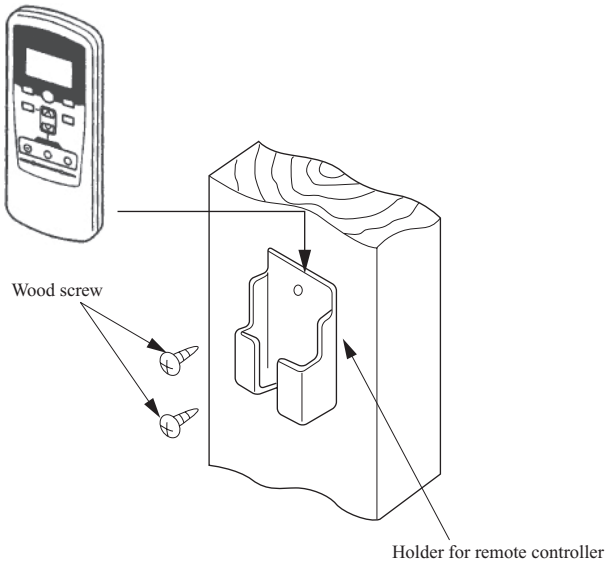

Installation tips for the remote controller holder

· Adjust and keep the holder upright

· Tighten the screw to the end to avoid scratching the remote controller.

· DO NOT attach the holder on plaster wall.

How to insert batteries

① Detach the back lid

② Insert the batteries. (two AAA batteries)

③ Reattach the back lid.

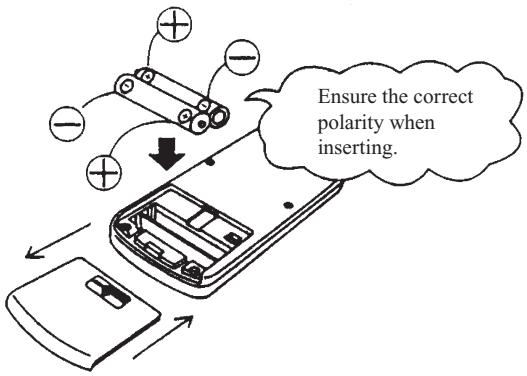

Control plural indoor units with one remote controller

Up to 16 indoor units can be connected.

① Connect the XY terminal with 2-core wire. As for the size, refer to the following note.

② For signal packaged air conditioner series, set the indoor unit address with SW2 on the indoor unit PCB from [0] to [F] so as not to duplicate.

Restrictions on the thickness and length of wire (Maximun total extension 600m.)	
Standard	Within 100m x 0.3 mm^2
	Within 200m x 0.5 mm^2
	Within 300m x 0.75mm^2
	Within 400m x 1.25mm^2
	Within 600m x 2.0 mm^2

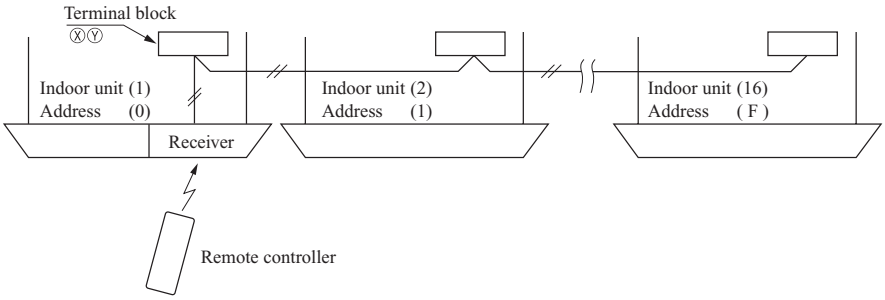

③ For VRF series, set the indoor unit address with SW1, SW2 and SW5-2 on the indoor unit PCB from [000] to [127] so as not to duplicate.

Master/Slave setting when using plural remote controllers

Up to two receivers can be installed in one indoor unit group.

When two receivers are used, it is necessary for a receiver to turn OFF SW2 on the receiver PCB to set it as slave.

(For the method of switching, please see **Setting on site** in the section of **How to install the receiver** in this manual.)

Wireless remote controller's operable area

① Standard reachable area of the signal

[condition] Illuminance at the receiver: 300lux

(when no lighting is installed within 1m of the receiver in an ordinary office.)

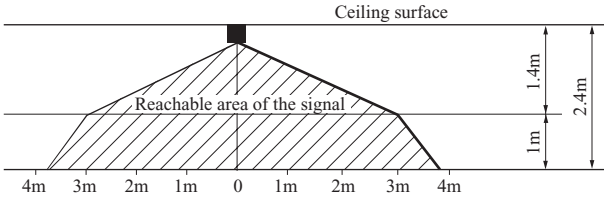

② Correlation between illuminance at the receiver and reachable area of the signal in a plain view. The drawing in the right shows the correlation between the reachable area of the signal and illuminance at the receiver when the remote controller is operated at 1m high under the condition of ceiling height of 2.4m.

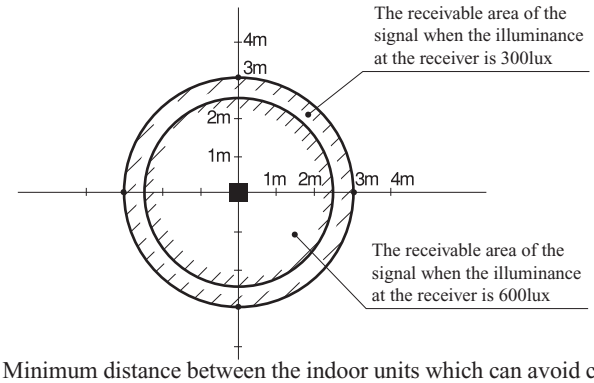

③ Installation tips when several receivers are installed close Minimum distance between the indoor units which can avoid cross communication is 5m under the condition of 300lux of illuminance at the receiver.
(When no lighting is installed within 1m of the receiver in an ordinary office)

(5) How to disable the Auto mode operation

VRF system (except heat recovery 3-pipe systems) cannot be operated in Auto mode. Make sure to set the remote controller for the models so as not to be able to choose Auto mode.

Pushing ACL switch with MODE button kept pressing or inserting the batteries with pressing MODE button will make auto mode operation.

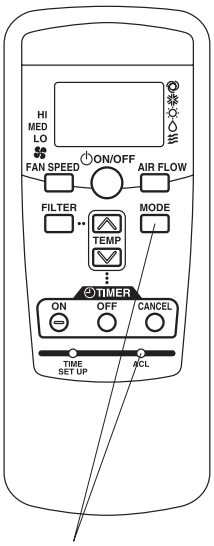

Attention

* When the batteries are removed, the setting will return to the default setting (Auto mode is valid).

Caution

Instruct the customer to set the mentioned above when replacing the batteries. (How to set is also mentioned in the user's manual attached on the air conditioner.)

(6) Backup button

A Backup button is provided on the receiver. Even when the operation from the wireless remote controller is not possible (due to flat batteries, controller Iost, or controller failure), still it possible to operate as temporary means. Press the button directly when operating it.

(a) The air conditioner starts the operation with the condition of Auto mode, 23˚C of set point, High fan speed and horizontal louver position.

(b) The air conditioner stops the operation when the button is pressed when in operation.

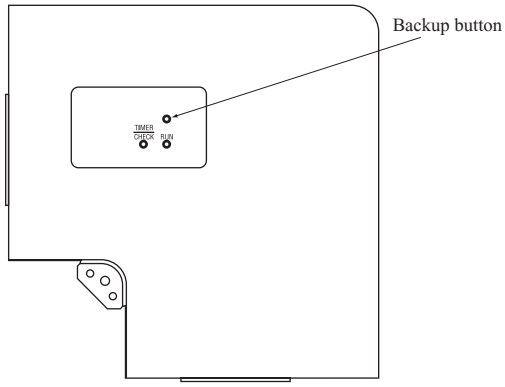

(7) Cooling test run operation

- After safety confirmation, turn on the power.
- Transmit a cooling operation command with wireless remote controller, while the backup button on the receiver is pressed.
- If the backup button on the receiver is pressed during a test run, it will end the test run.
- If you cannot operate the unit properly during a test run, please check by consulting with inspection guides on the wiring diagram of outdoor units.

(8) How to read the two-digit display

On the receiver of a wireless kit, a two-digit (7-segment) display is provided.

(a) An indication will be displayed for one hour after power on.

(b) An indication will be displayed for 3.5 seconds after transmitting a “STOP” command from the wireless remote controller or the operation of the backup button to stop the unit.

(c) An indication appearing in (a) or (b) above will go off as soon as the unit starts operation.

(d) When there are no error records to indicate, addresses of all the connected units are displayed.

(e) When there are some error records remaining, the error records are displayed.

(f) Error records can be cleared by transmitting a “STOP” command from the wireless remote controller, while the backup button is pressed.

5.3 EXCEPT FOR FDT & FDTC SERIES

This product is dedicated for heat pump unit. Never install on the unit dedicated for cooling.

(1) Wireless kit model

Model
RCN-KIT3-E

(2) Accessories (Confirm the following accessories).

① Light detection adaptor	1
② Wiring (3m)	1
③ Parts set (A)	1
④ Parts set (B)	1
⑤ Parts set (C)	1
⑥ Wireless remote controller	1
⑦ User's manual	1

① Screw for light detetion adaptor	2
② Fixing band	1
③ Clamp	5
④ Screw for clamp	5

① Remote controller holder	1
② Screw for holder	2
③ AAA dry cellbattery (R03)	2

① Light detection section installation bracket	1
② Screw for the bracket	2
③ Installation fitting	2

(3) Wireless remote controller's operable area

The receiver can be installed by replacing with a corner panel on the applicable decorative panel.

(a) When installed on ceiling

① Standard reachable area of the signal

[Condition] Illuminance at the receiver : 300lux (when no lighting is installed within 1m of the receiver in an ordinary office.)

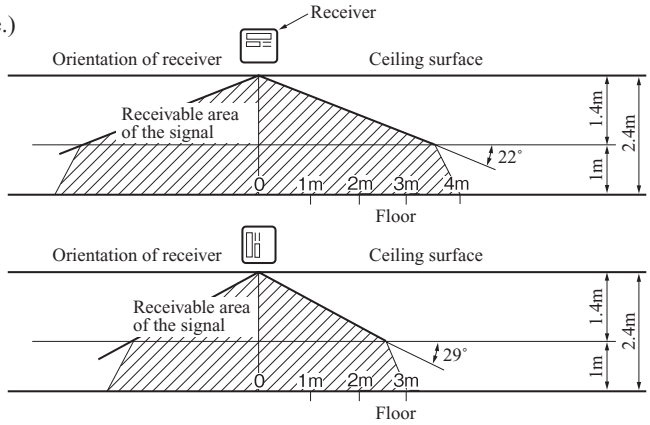

② Correlation between illuminance at the receiver and reachable area of the signal in a plain view.

[Condition] Correlation between the reachable area of the signal and illuminance at the receiver when the remote controller is operated at 1.1m high under the condition of ceiling height of 2.5m.

When the illuminance becomes double, the area is narrowed down to two third.

(b) When installed on wall

[Condition] Illuminance at the receiver : 800lux.

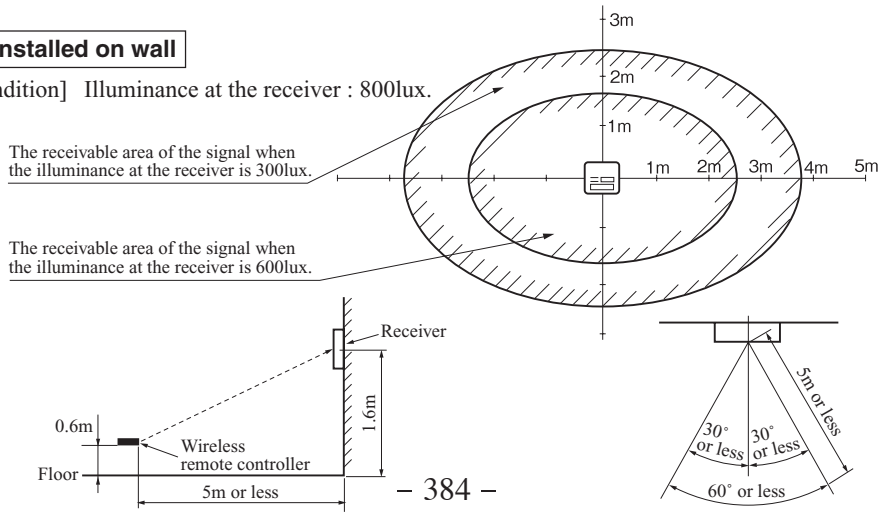

(4) How to install the receiver

The following two methods can be used to install the receiver onto a ceiling or a wall.

Select a method according to the installation position.

<Installation position>

① Direct installation onto the ceiling with wood screws.

② Installation with accessory's bracket

(a) Drilling of the ceiling (ceiling opening)

Drill the receiver installation holes with the following dimensions at the ceiling position where wires can be connected.

(A) Direct installation onto the ceiling with wood screws.	88mm (H) × 101mm (W)
(B) Installation with enclosed bracket.	108mm (H) × 108mm (W)

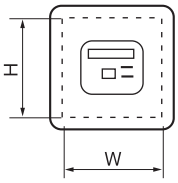

(b) Wiring connection of receiver

[Caution] Do not connect the wiring to the power source of the terminal block.
If it is connected, printed board will be damaged.

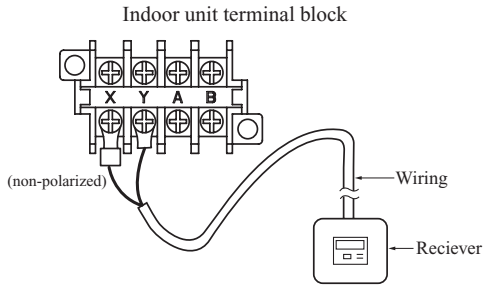

(c) Installation of the receiver

Remove the screw on the side of the receiver and sprit it into the upper case and lower case. Install the receiver with one of the two installation methods (A) or (B) shown below.

(A) Direct installation onto the ceiling with screws

▷ Use this installation method when the ceiling is wooden, and there is no problem for strength in installing directly with wood screws.

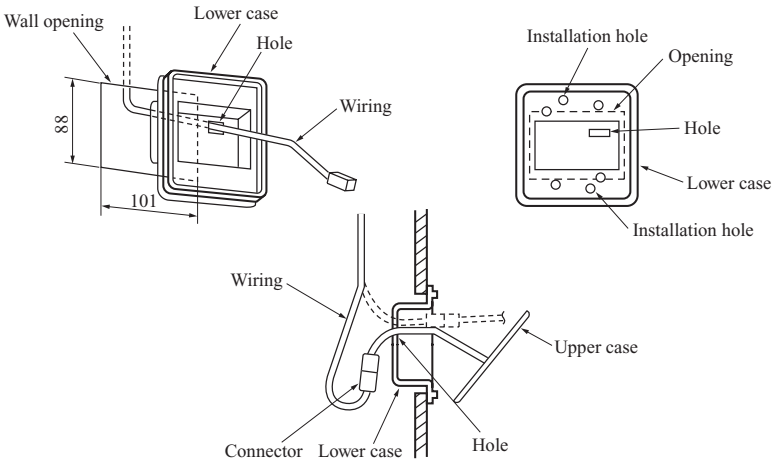

① Put through the wiring from the back side to the hole of the lower case.

② Fit the lower case into the ceiling opening. Make sure that the clearance between the convex part of the back of the lower case and the ceiling opening must be as equal as possible on both sides.

③ Using the two installation holes shown above, fix the lower case onto the ceiling with the enclosed wood screws. (The other four holes are not used.)

④ Connect the wiring with the wiring from the upper case by the connector.

⑤ Take out the connector to the backside from the hole of the lower case putting through the wiring at ①.

⑥ Fit the upper case and the lower case, and tighten the screws.

(B) Installation with enclosed bracket

▷ Use this method when installaing onto a gypsum board (7 to 18mm), etc.

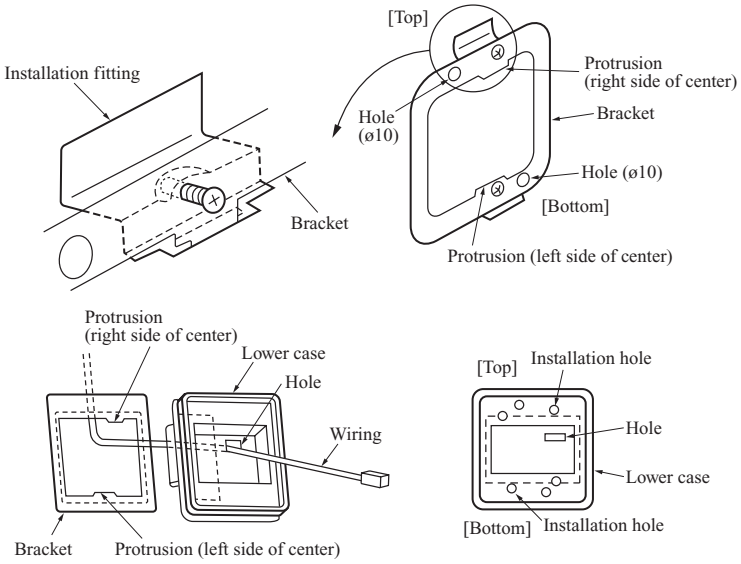

① Catch the two protrusion of the enclosed bracket onto the fitting as shown above, and temporarily fix with the screws. (The bracket has an up/down and front/back orientation. Confirm the top/bottom protrusion positions and the positional relation of the ø 10 holes on the bracket and the installation hole on the lower case with the above drawing.)

② Insert the end of the installation fitting into the back of the ceiling from the opening, and tighten the screws to fix the bracket onto the ceiling.

③ Pass the wiring from the rear side through the hole on the lower case.

④ Fit the lower case onto the bracket, and fix the lower case to the bracket using the two installation holes shown above. (The other four holes are not used.)

⑤ Follow step ① to ⑥ for (A) to complete the installation.

(5) Remote controller

Installation of the controller holder

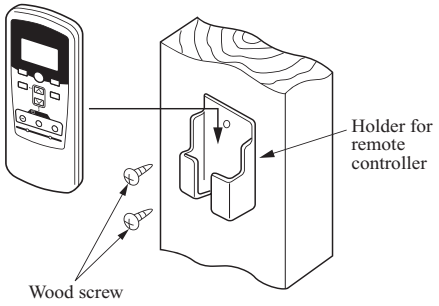

Caution

DO NOT install it on the following places

1. Places exposed to direct sunlight
2. Places near heat devices
3. High humidity places
4. Hot surface or cold surface enough to generate condensation
5. Places exposed to oil mist or steam directly
6. Uneven surface

Installation tips for the remote controller holder

- Adjust and keep the holder upright.
- Tighten the screw to the end to avoid scratching the remote controller.
- DO NOT attach the holder to plaster wall.

How to insert batteries

① Detach the back lid.

② Insert the batteries. (two AAA batteries)

③ Reattach the back lid.

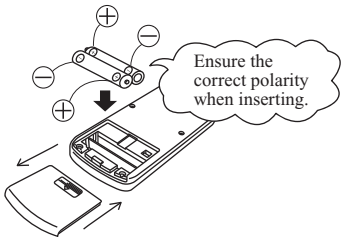

(6) Cooling test run operation

- After safety confirmation, turn on the power.
- Transmit a cooling operation command with wireless remote controller, while the backup button on the receiver is pressed.
- If the backup button on the receiver is pressed during a test run, it will end the test run.
- If you cannot operate the unit properly during a test run, please check by consulting with inspection guides on the wiring diagram of outdoor units.

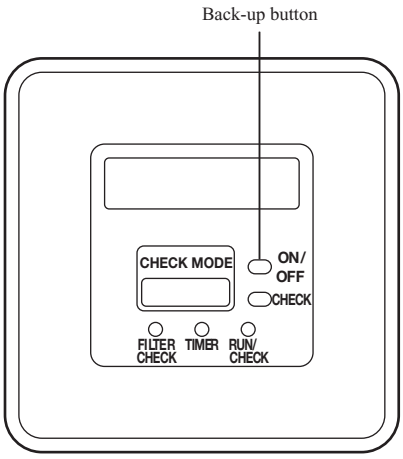

(7) Setting of wireless remote controller and receiver

(A) Methods of avoiding the malfunction due to the mixed communication

Do both procedures ① and ②.

This setting is to avoid the mixed communication with other household electric appliances or the mixed communication when two receivers are located closely.

① **Setting change of the wireless remote controller**

Pressing ACL and AIRFLOW button at the same time or inserting the batteries with pressing AIRFLOW button will customize the signal.

Note *When the batteries are removed, the setting will return to the default setting. Make sure to reset it when the batteries are replaced.

② **Setting the PCB of the receiver**

Turn SW1-1 off.

● **Wireless remote controller** ● **PCB of the receiver**

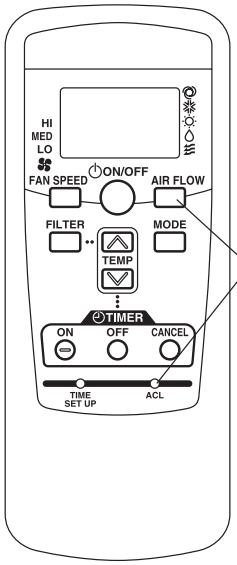

Setting to avoid mixed communication.

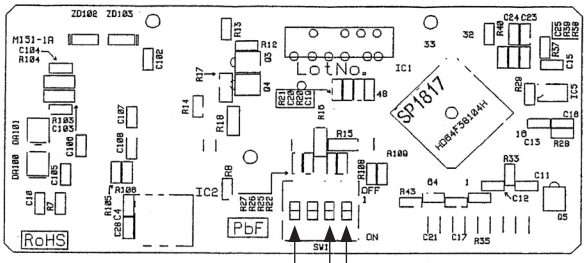

SW1-1 (Customized signal setting to avoid mixed communication)

SW1-4 (Auto restart)

SW1-2 (Receiver master/slave setting)

SW1-1	Customized signal setting to avoid mixed communication	ON : Normal OFF : Remote
SW1-2	Receiver master/slave setting	ON : Master OFF : Slave
SW1-4	Auto restart	ON : Valid OFF : Invalid

[ ] : Default setting

(B) Control plural indoor units with one remote controller

Up to 16 indoor units can be connected.

① Connect the XY terminal with 2-core wire. As for the size, refer to the following note.

② For Packaged air conditioner series, set the indoor unit address with SW2 on the indoor unit PCB from [0] to [F] so as not to duplicate.

Restrictions on the thickness and length of wire
(Maximun total extension 600m.)

Standard	Within 100m x 0.3 mm^2
	Within 200m x 0.5 mm^2
	Within 300m x 0.75mm^2
	Within 400m x 1.25mm^2
	Within 600m x 2.0 mm^2

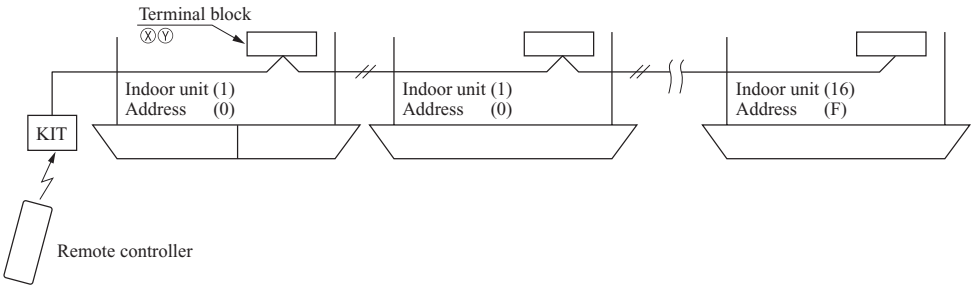

③ For VRF series, set the indoor unit address with SW1, SW2 and SW5-2 on the indoor unit PCB from [000] to [127] so as not to duplicate.

(C) Master/Slave setting when using plural remote controller

Up to two receivers can be installed in one indoor unit group.

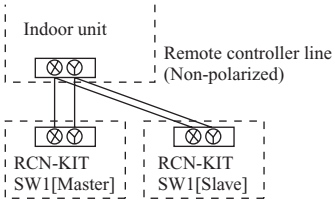

Switch	Setting	Function
SW1-2	ON	Master
	OFF	Slave

INVERTER DRIVEN MULTI-INDOOR-UNIT CLIMATE CONTROL SYSTEM

MITSUBISHI HEAVY INDUSTRIES, LTD.

Air-Conditioning & Refrigeration Systems Headquarters
16-5, 2-chome, Kounan, Minato-ku, Tokyo, 108-8215, Japan
Fax : (03) 6716-5926

No.106(0.55A) R